Public Relations Information and Channels for Submitting Suggestions or Complaints Regarding the Promotion of Integrity and Transparency in Operations

Channels for Submitting Suggestions or Complaints *

Submission of Suggestions or Complaints via the EGAT Official Website *

EGAT Supplier Code of Conduct **

* This is not a channel for submitting comments on the draft Terms of Reference (TOR), draft technical specifications for procurement, draft announcements, or draft bidding documents.

** EGAT has established and published the Supplier Code of Conduct to provide all EGAT suppliers with guidelines for conducting business ethically and with good governance, taking into account environmental, social, and corporate governance (ESG) principles, legal compliance, and respect for human rights, as detailed in the EGAT Supplier Code of Conduct QR Code.

ข้อมูลประชาสัมพันธ์และช่องทางรับข้อคิดเห็นหรือข้อร้องเรียน ด้านการส่งเสริมคุณธรรมและความโปร่งใสในการดำเนินการ

นโยบายต่อต้านการให้หรือรับสินบนเพื่อป้องกันการทุจริตและประพฤติมิชอบ

จรรยาบรรณของผู้ปฏิบัติงานจัดซื้อจัดจ้างและบริหารพัสดุ

ช่องทางรับข้อคิดเห็นหรือข้อร้องเรียน *

การแจ้งข้อคิดเห็นหรือข้อร้องเรียนทางเว็บไซต์ กฟผ. *

จรรยาบรรณคู่ค้า กฟผ. **

* ไม่ใช่ช่องทางแสดงความคิดเห็นร่างขอบเขตของงานหรือรายละเอียดคุณลักษณะเฉพาะของพัสดุที่จะซื้อหรือจ้าง/ ร่างประกาศ/ ร่างเอกสารประกวดราคาฯ

** กฟผ. จัดทำและเผยแพร่จรรยาบรรณคู่ค้า เพื่อให้คู่ค้าของ กฟผ. ทุกรายมีแนวปฏิบัติในการดำเนินธุรกิจอย่างมีจริยธรรมและธรรมาภิบาล โดยคำนึงถึงสิ่งแวดล้อม สังคม การกำกับดูแลกิจการที่ดี ปฏิบัติตามกฎหมาย และเคารพหลักสิทธิมนุษยชน ดังมีรายละเอียดระบุใน QR Code จรรยาบรรณคู่ค้า กฟผ."

EGAT's Privacy Notice on Procurement, Inventory Management and Contract Administration

Electricity Generating Authority of Thailand (EGAT) has performed the protection of the Personal Data regarding procurement, inventory management and contract administration to be in accordance with **the Personal Data Protection Act B.E. 2562** (the "2019 PDPA"), which comes into effect on June 1, 2022.

Details about EGAT's Privacy Notice on Procurement, Inventory Management and Contract Administration are available for you at https://www.egat.co.th/privacy-notice-procurement_en.html or the below QR Code.

The Redaction of Sensitive Personal Data

EGAT has announced the Privacy Notice on Procurement, Inventory Management and Contract Administration for the collection, use or disclosure of Personal Data, excluding the Sensitive Personal Data.

Should the documents you wish to submit to EGAT contain the Sensitive Personal Data as defined in Section 26 of the 2019 PDPA, pertaining to racial, ethnic origin, political opinions, cult, religious or philosophical beliefs, sexual behavior, criminal records, health data, disability, trade union information, genetic data, biometric data, or of any data which may affect you in the same manner, you shall redact or conceal such data before submitting to EGAT.

<u>ประกาศความเป็นส่วนตัว (Privacy Notice) สำหรับการจัดซื้อจัดจ้าง การบริหารพัสดุ และการบริหารสัญญาของ กฟผ.</u>

การไฟฟ้าฝ่ายผลิตแห่งประเทศไทย (กฟผ.) ได้ดำเนินการคุ้มครองข้อมูลส่วนบุคคลสำหรับการจัดซื้อจัดจ้าง การบริหารพัสดุ และการบริหารสัญญา เพื่อให้เป็นไปตาม**พระราชบัญญัติคุ้มครองข้อมูลส่วนบุคคลของประเทศไทย พ.ศ. 2562** (PDPA) ซึ่งมีผลบังคับใช้อย่างครบถ้วน ตั้งแต่วันที่ 1 มิถุนายน 2565 ทั้งนี้ ท่านสามารถศึกษารายละเอียดประกาศความเป็นส่วนตัว (Privacy Notice) สำหรับการจัดซื้อจัดจ้าง การบริหารพัสดุ และการบริหารสัญญา ได้ที่ https://www.egat.co.th/privacy-notice-procurement.html หรือที่ QR Code ด้านล่าง

<u>การขีดฆ่าข้อมูลส่วนบุคคลอ่อนไหว</u>

กฟผ. มีประกาศความเป็นส่วนตัว (Privacy Notice) สำหรับการจัดซื้อจัดจ้าง การบริหารพัสดุ และการบริหารสัญญา เพื่อใช้ในการเก็บรวบรวม ใช้ หรือเปิดเผย ข้อมูลส่วนบุคคล แต่ไม่เก็บข้อมูลส่วนบุคคลอ่อนไหว หากเอกสารของท่านที่ต้องส่งมอบให้ กฟผ. มีข้อมูลส่วนบุคคลอ่อนไหวตามที่ถูกบัญญัติไว้ในมาตรา 26 ของ PDPA ดังนี้ เชื้อชาติ เผ่าพันธุ์ ความคิดเห็นทางการเมือง ความเชื่อในลัทธิ ศาสนาหรือปรัชญา พฤติกรรมทางเพศ ประวัติอาชญากรรม ข้อมูลสุขภาพ ความพิการ ข้อมูลสหภาพแรงงาน ข้อมูลพันธุกรรม ข้อมูลชีวภาพ หรือข้อมูลอื่นใด ซึ่งกระทบต่อเจ้าของข้อมูลส่วนบุคคลในทำนองเดียวกันรวมอยู่ด้วย ขอให้ท่านขีดฆ่า หรือปกปิดข้อมูลดังกล่าว ก่อนส่งมอบให้แก่ กฟผ.

1st Draft of Terms of Reference,

Announcement and Details of Medium Cost

for Invitation to Bid No. IETS-LPLC-TIEC-NPUP-MC1-01

Supply of Miscellaneous Equipment

Work Plan to Improve the Electricity Supply Model for High Voltage Substation to Enhance the Transmission System Stability and Reliability

Long-Term Investment Plan to Accommodate Large Power Consumer

Transmission System Improvement Project in Northeastern, Lower Northern, Central Regions and Bangkok Area to Enhance System Security

Transmission System Development in the Area of Nan Phrae and Uttaradit Provinces for Power Purchase from Lao PDR Projects

---

The Electricity Generating Authority of Thailand (EGAT) plans to call for proposals for the subject Invitation to Bid. Any person who has the authorization from the company, firm, joint venture or consortium who supplies or manufactures the equipment required under the subject invitation to Bid is allowed to submit a comment against the first draft of the Terms of Reference (TOR), the Announcement and the Details of Medium Cost attached herewith.

How to Comment

Those who would like to comment shall submit an official letter signed by the authorized person(s) together with the letter of authorization or the power of attorney, and addressed to "Chief, Procurement Department - Transmission System Segment, Central Procurement and Inventory Management Division".

Comments shall be submitted via email address: ***wirinya.cha@egat.co.th*** with all related documents attached (e.g. the letter of authorization and the power of attorney).

Comments shall be received by EGAT on or before ***September 25, 2026***, Bangkok Standard Time, **otherwise the comments will not be taken into consideration.**

EGAT reserves the right to change or not to change the terms and conditions contained in the Terms of Reference, the Announcement and the Details of Medium Cost subject to its consideration and such decision shall be final.

Miss Warisa Sukying

Head, Procurement Section - Transmission System Segment 1

September 22, 2026

Notice to Bidder

Subject : Online Payment for Purchase of Bidding Documents

Please be informed of the online payment for purchase of bidding documents as follows:

1) Fill-out the Registration Form and the proof of payment in the link provided in https://www4.egat.co.th/fprocurement/biddingeng

   Payment shall be made by bank transfer or telegraphic transfer to EGAT's account no. 109-6-01958-2 (swift code : KRTHTHBK), Krung Thai Bank Public Company Limited, Bangkruai Branch, Nonthaburi.

   All bank charges and fees incurred by the payment of bidding documents shall be under the buyer's responsibility.

2) The registration will be deemed complete only upon successful processing of the payment and confirmation of funds received.

3) After the payment has been verified for approximately 3 working days, the in-charge officer will send the link for downloading the bidding documents together with the receipt to the purchaser's email address in the Registration Form.

****

DRAFT

Invitation to Bid No. IETS-LPLC-TIEC-NPUP-MC1-01

Supply of Miscellaneous Equipment

Work Plan to Improve the Electricity Supply Model for High Voltage Substation to Enhance the Transmission System Stability and Reliability

Long-Term Investment Plan to Accommodate Large Power Consumer

Transmission System Improvement Project in Northeastern, Lower Northern, Central Regions and Bangkok Area to Enhance System Security

Transmission System Development in the Area of Nan Phrae and Uttaradit Provinces for Power Purchase from Lao PDR Projects

The Electricity Generating Authority of Thailand (EGAT) is calling for the subject Invitation to Bid to be financed by EGAT's fund.

Place of Delivery : Bangkok Port / Ex-works

Medium Cost (including Value Added Tax and other expenses) :

Description	Medium Cost (THB)
Schedule A1, C1 : Switchyard Lighting Fixture, Schedule A2 : Solar Lighting Fixture, Schedule B6, D5 : Rigid Steel Conduit, Schedule B7, D6 : Conduit Fitting	1,560,000.-
Schedule A3, B1 and C2 : Aluminum Tube	4,230,000.-
Schedule A4, B2, C3 and D1 : Compression Connector and Miscellaneous Hardware	2,680,000.-
Schedule B3 and D2 : 500 kV Bus Fitting	5,310,000.-
Schedule A5, B4, C4 and D3 : 230 kV and below Bus Fitting	7,540,000.-
Schedule A6, B5, C5 and D4 : Grounding Material	4,290,000.-

Eligibility of Bidders

1. The Bidder shall be a juristic person who manufactures or provides such materials or services and shall not be named in the List of Work Abandoners published by the Permanent Secretary, Ministry of Finance, and/or in the Debarment List and/or in the List of Work Abandoners declared by EGAT.
2. The Bidder shall not be a Jointly Interested Bidder with other Bidders as from the date of EGAT's issuance of the Invitation, or shall not be a person who undertakes any action as an "Obstruction of Fair Price Competition" for this Invitation.
3. The Bidder shall not either be EGAT's consultant or involve in EGAT's consultancy company under this Invitation to Bid, or shall not have EGAT's personnel involved in his business as shareholder having voting right that can control his business, director, manager, officer, employee, agent, or consultant except those who are officially ordered by EGAT to act or participate therein.
4. The Bidder shall not be the person who is privileged or protected not to be taken any legal proceedings under Thai Court; Provided that such Bidder's government declares that such special privilege is waived.
5. The Bidder who is a joint venture or consortium shall carry out all the work under such formation from the time of bidding until the fulfillment of the Contract.

DRAFT

Availability of Bidding Documents

Bidding Documents are available for online purchase during 8:00 hrs. to 15:00 hrs., Bangkok Standard Time, as from_____to_____ at USD 10.- or THB 300.- per copy, non-refundable.

Please find more details for online purchasing process at http://www4.egat.co.th/fprocurement/biddingeng or contact for further information at telephone no. 66 2436 0348 or procurement.tse@egat.co.th.

Delivery of Bids

Bids shall be submitted at Bidding Room, 1st Floor, Tor 137 Building at EGAT's Head Office, Nonthaburi during 9:00 hrs. to 10:00 hrs., Bangkok Standard Time, _____and will be opened publicly at 10:00 hrs.

ELECTRICITY GENERATING AUTHORITY OF THAILAND

(Date of Announcement)

(Miss Wallapa Chewadhnakorlkul)
Chief, Procurement Department – Transmission System Segment

DRAFT

ประกาศการไฟฟ้าฝ่ายผลิตแห่งประเทศไทย

เรื่อง ประกวดราคาซื้อ เลขที่ IETS-LPLC-TIEC-NPUP-MC1-01

การไฟฟ้าฝ่ายผลิตแห่งประเทศไทย (กฟผ.) มีความประสงค์จะซื้อ Miscellaneous Equipment สำหรับแผนงานปรับปรุงรูปแบบการจ่ายไฟฟ้าสำหรับสถานีไฟฟ้าแรงสูง เพื่อเสริมสร้างความมั่นคงเชื่อถือได้ของระบบส่ง แผนลงทุนระยะยาวเพื่อรองรับกลุ่มผู้ใช้ไฟฟ้าขนาดใหญ่ โครงการปรับปรุงระบบส่งไฟฟ้าบริเวณภาคตะวันออกเฉียงเหนือ ภาคเหนือตอนล่าง ภาคกลาง และกรุงเทพมหานคร เพื่อเสริมความมั่นคงระบบไฟฟ้า โครงการพัฒนาระบบส่งไฟฟ้าบริเวณจังหวัด น่าน แพร่ และ อุตรดิตถ์ เพื่อรับซื้อไฟฟ้าจากโครงการใน สปป.ลาว โดยใช้งบประมาณ กฟผ.

<u>สถานที่ส่งมอบ</u> : ท่าเรือกรุงเทพฯ / หน้าโรงงานผู้ผลิต

<u>ราคากลาง (รวมภาษีมูลค่าเพิ่มและค่าใช้จ่ายอื่น ๆ)</u> :

รายการ	ราคากลาง (บาท)
Schedule A1, C1 : Switchyard Lighting Fixture, Schedule A2 : Solar Lighting Fixture, Schedule B6, D5 : Rigid Steel Conduit, Schedule B7, D6 : Conduit Fitting	1,560,000.-
Schedule A3, B1 and C2 : Aluminum Tube	4,230,000.-
Schedule A4, B2, C3 and D1 : Compression Connector and Miscellaneous Hardware	2,680,000.-
Schedule B3 and D2 : 500 kV Bus Fitting	5,310,000.-
Schedule A5, B4, C4 and D3 : 230 kV and below Bus Fitting	7,540,000.-
Schedule A6, B5, C5 and D4 : Grounding Material	4,290,000.-

<u>คุณสมบัติของผู้เสนอราคา</u>

1. ต้องเป็นนิติบุคคลผู้ผลิตหรือเป็นผู้มีอาชีพขายพัสดุตามประกาศและต้องไม่เป็นผู้ทิ้งงานซึ่งปลัดกระทรวงการคลังได้แจ้งเวียนชื่อไว้ หรือต้องไม่เป็นผู้ที่ กฟผ. ห้ามติดต่อหรือห้ามเข้าเสนอราคา หรือต้องไม่เป็นผู้ที่ได้รับผลของการสั่งให้นิติบุคคลหรือบุคคลอื่นเป็นผู้ทิ้งงานตามคำสั่ง กฟผ.
2. ต้องไม่เป็นผู้มีผลประโยชน์ร่วมกันกับผู้เสนอราคารายอื่น ณ วันประกาศประกวดราคาครั้งนี้เป็นต้นไป หรือต้องไม่เป็นผู้กระทำการอันเป็นการขัดขวางการแข่งขันราคาอย่างเป็นธรรมในการดำเนินการประกวดราคาครั้งนี้
3. ต้องไม่เป็นที่ปรึกษาของ กฟผ. หรือมีส่วนร่วมในบริษัทที่ปรึกษาของ กฟผ. ในงานนี้ หรือต้องไม่มีผู้ปฏิบัติงาน กฟผ. เข้าไปมีส่วนร่วมในกิจการของผู้เสนอราคา ไม่ว่าจะในฐานะผู้ถือหุ้นที่มีสิทธิควบคุมการจัดการ กรรมการ ผู้อำนวยการ ผู้จัดการ พนักงาน ลูกจ้าง ตัวแทน หรือที่ปรึกษา ยกเว้น ในกรณีที่ผู้ปฏิบัติงานได้รับคำสั่งอย่างเป็นทางการจาก กฟผ. ให้ไปปฏิบัติงานหรือเข้าร่วมในกิจการของผู้เสนอราคา
4. ต้องไม่เป็นผู้ได้รับเอกสิทธิ์หรือความคุ้มกัน ซึ่งอาจปฏิเสธไม่ยอมขึ้นศาลไทย เว้นแต่รัฐบาลของผู้เสนอราคาได้มีคำสั่งให้สละสิทธิ์และความคุ้มกันเช่นว่านั้น
5. ผู้ประสงค์เข้าประกวดราคาในนามของกิจการร่วมค้าหรือกิจการค้าร่วม (Joint Venture or Consortium) จะต้องดำเนินการทุกขั้นตอนของการประกวดราคาในนามของกิจการร่วมค้าหรือกิจการค้าร่วม ตั้งแต่การเสนอราคาจนสิ้นสุดข้อผูกพันกับ กฟผ.

DRAFT

การขายเอกสารประกวดราคา

ผู้สนใจติดต่อซื้อเอกสารประกวดราคา ในราคาชุดละ 300.- บาท ในวันทำการระหว่างเวลา 08:00 น. ถึง 15:00 น. ตั้งแต่วันที่_____ถึงวันที่_____ ทั้งนี้ สามารถดูรายละเอียดการซื้อเอกสารประกวดราคาได้ที่เว็บไซต์ http://www4.egat.co.th/fprocurement/biddingeng หรือสอบถามข้อมูลเพิ่มเติมได้ทางโทรศัพท์ หมายเลข 0 2436 0348 หรืออีเมล procurement.tse@egat.co.th

การยื่นซองประกวดราคา

กำหนดยื่นซองประกวดราคา ในวันที่ _____เวลา 09:00 น. ถึง 10:00 น. และเปิดซองประกวดราคาเวลา 10:00 น. ณ ห้องประกวดราคา ชั้น 1 อาคาร ท.137 การไฟฟ้าฝ่ายผลิตแห่งประเทศไทย เชิงสะพานพระราม 7 จังหวัดนนทบุรี

ประกาศ ณ วันที่

(นางสาววัลลภา ชีวธนากรณ์กุล)
หัวหน้ากองจัดซื้อจัดจ้างสายงานระบบส่ง

DRAFT

ตารางแสดงวงเงินงบประมาณที่ได้รับจัดสรรและราคากลาง(ราคาอ้างอิง)

ในการจัดซื้อจัดจ้างที่มิใช่งานก่อสร้าง

1. **ชื่อโครงการ** Bid No. IETS-LPLC-TIEC-NPUP-MC1-01

การจัดซื้อ Miscellaneous Equipment

แผนงานปรับปรุงรูปแบบการจ่ายไฟฟ้าสำหรับสถานีไฟฟ้าแรงสูง เพื่อเสริมสร้างความมั่นคงเชื่อถือได้ของระบบส่ง

แผนลงทุนระยะยาวเพื่อรองรับกลุ่มผู้ใช้ไฟฟ้าขนาดใหญ่

โครงการปรับปรุงระบบส่งไฟฟ้าบริเวณภาคตะวันออกเฉียงเหนือ ภาคเหนือตอนล่าง ภาคกลาง และกรุงเทพมหานคร เพื่อเสริมความมั่นคงระบบไฟฟ้า

โครงการพัฒนาระบบส่งไฟฟ้าบริเวณจังหวัด น่าน แพร่ และ อุตรดิตถ์

เพื่อรับซื้อไฟฟ้าจากโครงการใน สปป.ลาว

/หน่วยงานเจ้าของโครงการ ฝ่ายแผนงานและโครงการระบบส่ง การไฟฟ้าฝ่ายผลิตแห่งประเทศไทย

2. **วงเงินงบประมาณที่ได้รับจัดสรร**

แผนงานปรับปรุงรูปแบบการจ่ายไฟฟ้าสำหรับสถานีไฟฟ้าแรงสูง เพื่อเสริมสร้างความมั่นคงเชื่อถือได้ของระบบส่ง งบประมาณ 170 ล้านบาท

แผนลงทุนระยะยาวเพื่อรองรับกลุ่มผู้ใช้ไฟฟ้าขนาดใหญ่ งบประมาณ 1,570 ล้านบาท

โครงการปรับปรุงระบบส่งไฟฟ้าบริเวณภาคตะวันออกเฉียงเหนือ ภาคเหนือตอนล่าง ภาคกลาง และกรุงเทพมหานคร เพื่อเสริมความมั่นคงระบบไฟฟ้า งบประมาณ 94,040 ล้านบาท

โครงการพัฒนาระบบส่งไฟฟ้าบริเวณจังหวัด น่าน แพร่ และ อุตรดิตถ์

เพื่อรับซื้อไฟฟ้าจากโครงการใน สปป.ลาว งบประมาณ 26,220 ล้านบาท

3. **วันที่กำหนดราคากลาง** 5 สิงหาคม 2569 (วันที่ อวส. อนุมัติ)

ราคารวมภาษีมูลค่าเพิ่มและค่าใช้จ่ายอื่นๆ เป็นเงิน 25,610,000.00 บาท **ราคา/หน่วย** ตามเอกสารแนบ

4. **แหล่งที่มาของราคากลาง**

หลักเกณฑ์การกำหนดราคากลางการจัดซื้อและจัดจ้างงานก่อสร้างระบบส่งไฟฟ้าของสายงานพัฒนาระบบส่ง

5. **รายชื่อเจ้าหน้าที่ผู้กำหนดราคากลาง**

5.1 นางสาวจารุวรรณ พิพัฒน์มงคลพร หอต-ร. กวอ-ร.

5.2 นายศิรสิทธิ์ ฟองจางวาง วศ.4 หอต-ร. กวอ-ร.

<u>หมายเหตุ</u> ค่าใช้จ่ายอื่นๆ ได้แก่ ค่าใช้จ่ายที่ กฟผ. ต้องจ่ายตามวิธีการพิจารณาเปรียบเทียบราคาที่กำหนดไว้ในเอกสารประกวดราคา เช่น อากรขาเข้า เป็นต้น

DRAFT

Medium Cost for Bid No. IETS-LPLC-TIEC-NPUP-MC1-01

Schedule	Currency	Medium Cost* (Round)
A1, A2, B6, B7, C1, D5 AND D6	THB	1,560,000.00
A3, B1 AND C2	THB	4,230,000.00
A4, B2, C3 AND D1	THB	2,680,000.00
B3 AND D2	THB	5,310,000.00
A5, B4, C4 AND D3	THB	7,540,000.00
A6, B5, C5 AND D4	THB	4,290,000.00
Total Medium Cost	**THB**	**25,610,000.00**

*include VAT and other expenses

นายสมชัย เจริญศรีเกษม
ผู้อำนวยการฝ่ายวิศวกรรมระบบส่ง
05 Aug 2026

DRAFT

MEDIUM COST FOR BID NO. IETS-LPLC-TIEC-NPUP-MC1-01

SUMMARY OF BID PRICE

SUPPLY OF MISCELLANEOUS EQUIPMENT

WORK PLAN TO IMPROVE THE ELECTRICITY SUPPLY MODEL FOR HIGH VOLTAGE SUBSTATION TO ENHANCE THE TRANSMISSION SYSTEM STABILITY AND RELIABILITY
LONG-TERM INVESTMENT PLAN TO ACCOMMODATE LARGE POWER CONSUMER
TRANSMISSION SYSTEM IMPROVEMENT PROJECT IN NORTHEASTERN, LOWER NORTHERN, CENTRAL REGIONS AND BANGKOK AREA TO ENHANCE SYSTEM SECURITY
TRANSMISSION SYSTEM DEVELOPMENT IN THE AREA OF NAN PHRAE AND UTTARADIT PROVINCES FOR POWER PURCHASE FROM LAO PDR PROJECTS

No.	Description	Currency	Supply of Equipment	
			Foreign Supply	Local Supply
			CFR Thai Port	Ex-works Price (excluding VAT) Baht
			Amount	Amount
1	Schedule A1 : Switchyard Lighting Fixture			240,488.60
2	Schedule A2 : Solar Lighting Fixture			298,079.10
3	Schedule B6 : Rigid Steel Conduit			214,368.00
4	Schedule B7 : Conduit Fitting	THB	158,460.50	
5	Schedule C1 : Switchyard Lighting Fixture			245,869.80
6	Schedule D5 : Rigid Steel Conduit			151,844.00
7	Schedule D6 : Conduit Fitting	THB	116,770.50	
BID PRICE		THB	275,231.00	Baht 1,150,649.50
IMPORT DUTY		THB	27,523.10	Baht
CUSTOM CLEARANCE		THB	1,651.39	Baht
VAT		THB	21,192.79	Baht 80,545.47
SUMMARY OF MEDIUM COST		THB	325,598.28	Baht 1,231,194.97
SUMMARY OF MEDIUM COST FOR SCHEDULE A1, A2, B6, B7, C1, D5 AND D6		THB	1,556,793.25	
SUMMARY OF MEDIUM COST FOR SCHEDULE A1, A2, B6, B7, C1, D5 AND D6 (ROUNDED)		THB	1,560,000.00	

นายสมชัย เจริญศรีเกษม
ผู้อำนวยการฝ่ายวิศวกรรมระบบส่ง
05 Aug 2026

DRAFT

MEDIUM COST FOR BID NO. IETS-LPLC-TIEC-NPUP-MC1-01

SUMMARY OF BID PRICE

SUPPLY OF MISCELLANEOUS EQUIPMENT

WORK PLAN TO IMPROVE THE ELECTRICITY SUPPLY MODEL FOR HIGH VOLTAGE SUBSTATION TO ENHANCE THE TRANSMISSION SYSTEM STABILITY AND RELIABILITY

LONG-TERM INVESTMENT PLAN TO ACCOMMODATE LARGE POWER CONSUMER

TRANSMISSION SYSTEM IMPROVEMENT PROJECT IN NORTHEASTERN, LOWER NORTHERN, CENTRAL REGIONS AND BANGKOK AREA TO ENHANCE SYSTEM SECURITY

No.	Description	Supply of Equipment Local Supply Ex-works Price (excluding VAT) Baht Amount
1	Schedule A3 : Aluminum Tube	1,699,605.00
2	Schedule B1 : Aluminum Tube	1,949,700.00
3	Schedule C2 : Aluminum Tube	300,220.00
	BID PRICE	Baht 3,949,525.00
	IMPORT DUTY	Baht
	CUSTOM CLEARANCE	Baht
	VAT	Baht 276,466.75
	SUMMARY OF MEDIUM COST	Baht 4,225,991.75
	SUMMARY OF MEDIUM COST FOR SCHEDULE A3, B1 AND C2	Baht 4,225,991.75
	SUMMARY OF MEDIUM COST FOR SCHEDULE A3, B1 AND C2 (ROUNDED)	Baht 4,230,000.00

นายสมชัย เจริญศรีเกษม
ผู้อำนวยการฝ่ายวิศวกรรมระบบส่ง
05 Aug 2026

DRAFT

MEDIUM COST FOR BID NO. IETS-LPLC-TIEC-NPUP-MC1-01

SUMMARY OF BID PRICE

SUPPLY OF MISCELLANEOUS EQUIPMENT

WORK PLAN TO IMPROVE THE ELECTRICITY SUPPLY MODEL FOR HIGH VOLTAGE SUBSTATION TO ENHANCE THE TRANSMISSION SYSTEM STABILITY AND RELIABILITY
LONG-TERM INVESTMENT PLAN TO ACCOMMODATE LARGE POWER CONSUMER
TRANSMISSION SYSTEM IMPROVEMENT PROJECT IN NORTHEASTERN, LOWER NORTHERN, CENTRAL REGIONS AND BANGKOK AREA TO ENHANCE SYSTEM SECURITY

No.	Description	Supply of Equipment Local Supply Ex-works Price (excluding VAT) Baht Amount
1	Schedule A4 : Compression Connector and Miscellaneous Hardware	1,163,110.00
2	Schedule B2 : Compression Connector and Miscellaneous Hardware	410,315.00
3	Schedule C3 : Compression Connector and Miscellaneous Hardware	354,495.00
4	Schedule D1 : Compression Connector and Miscellaneous Hardware	579,890.00
	BID PRICE	Baht 2,507,810.00
	IMPORT DUTY	Baht
	CUSTOM CLEARANCE	Baht
	VAT	Baht 175,546.70
	SUMMARY OF MEDIUM COST	Baht 2,683,356.70
	SUMMARY OF MEDIUM COST FOR SCHEDULE A4, B2, C3 AND D1	Baht 2,683,356.70
	SUMMARY OF MEDIUM COST FOR SCHEDULE A4, B2, C3 AND D1 (ROUNDED)	Baht 2,680,000.00

นายสมชัย เจริญศรีเกษม
ผู้อำนวยการฝ่ายวิศวกรรมระบบส่ง
05 Aug 2026

DRAFT

MEDIUM COST FOR BID NO. IETS-LPLC-TIEC-NPUP-MC1-01

SUMMARY OF BID PRICE

SUPPLY OF MISCELLANEOUS EQUIPMENT

WORK PLAN TO IMPROVE THE ELECTRICITY SUPPLY MODEL FOR HIGH VOLTAGE SUBSTATION TO ENHANCE THE TRANSMISSION SYSTEM STABILITY AND RELIABILITY
LONG-TERM INVESTMENT PLAN TO ACCOMMODATE LARGE POWER CONSUMER
TRANSMISSION SYSTEM IMPROVEMENT PROJECT IN NORTHEASTERN, LOWER NORTHERN, CENTRAL REGIONS AND BANGKOK AREA TO ENHANCE SYSTEM SECURITY
TRANSMISSION SYSTEM DEVELOPMENT IN THE AREA OF NAN PHRAE AND UTTARADIT PROVINCES FOR POWER PURCHASE FROM LAO PDR PROJECTS

No.	Description	Currency	Supply of Equipment	
			Foreign Supply	Local Supply
			CFR Thai Port	Ex-works Price (excluding VAT) Baht
			Amount	Amount
1	Schedule B3 : 500 kV Bus Fitting	THB	2,153,345.00	
2	Schedule D2 : 500 kV Bus Fitting	THB	2,332,830.00	
BID PRICE		THB	4,486,175.00	Baht
IMPORT DUTY		THB	448,617.50	Baht
CUSTOM CLEARANCE		THB	26,917.05	Baht
VAT		THB	345,435.48	Baht
SUMMARY OF MEDIUM COST		THB	5,307,145.03	Baht
SUMMARY OF MEDIUM COST FOR SCHEDULE B3 AND D2		THB	5,307,145.03	
SUMMARY OF MEDIUM COST FOR SCHEDULE B3 AND D2 (ROUNDED)		THB	5,310,000.00	

นายสมชัย เจริญศรีเกษม
ผู้อำนวยการฝ่ายวิศวกรรมระบบส่ง
05 Aug 2026

DRAFT

MEDIUM COST FOR BID NO. IETS-LPLC-TIEC-NPUP-MC1-01

SUMMARY OF BID PRICE

SUPPLY OF MISCELLANEOUS EQUIPMENT

WORK PLAN TO IMPROVE THE ELECTRICITY SUPPLY MODEL FOR HIGH VOLTAGE SUBSTATION TO ENHANCE THE TRANSMISSION SYSTEM STABILITY AND RELIABILITY
LONG-TERM INVESTMENT PLAN TO ACCOMMODATE LARGE POWER CONSUMER
TRANSMISSION SYSTEM IMPROVEMENT PROJECT IN NORTHEASTERN, LOWER NORTHERN, CENTRAL REGIONS AND BANGKOK AREA TO ENHANCE SYSTEM SECURITY
TRANSMISSION SYSTEM DEVELOPMENT IN THE AREA OF NAN PHRAE AND UTTARADIT PROVINCES FOR POWER PURCHASE FROM LAO PDR PROJECTS

No.	Description	Currency	Supply of Equipment	
			Foreign Supply	Local Supply
			CFR Thai Port	Ex-works Price (excluding VAT) Baht
			Amount	Amount
1	Schedule A5 : 230 kV and below Bus Fitting	THB	4,270,795.00	
2	Schedule B4 : 230 kV and below Bus Fitting	THB	945,330.00	
3	Schedule C4 : 230 kV and below Bus Fitting	THB	733,675.00	
4	Schedule D3 : 230 kV and below Bus Fitting	THB	420,415.00	
BID PRICE		THB	6,370,215.00	Baht
IMPORT DUTY		THB	637,021.50	Baht
CUSTOM CLEARANCE		THB	38,221.29	Baht
VAT		THB	490,506.56	Baht
SUMMARY OF MEDIUM COST		THB	7,535,964.35	Baht
SUMMARY OF MEDIUM COST FOR SCHEDULE A5, B4, C4 AND D3		THB	7,535,964.35	
SUMMARY OF MEDIUM COST FOR SCHEDULE A5, B4, C4 AND D3 (ROUNDED)		THB	7,540,000.00	

DRAFT

นายสมชัย เจริญศรีเกษม
ผู้อำนวยการฝ่ายวิศวกรรมระบบส่ง
05 Aug 2026

MEDIUM COST FOR BID NO. IETS-LPLC-TIEC-NPUP-MC1-01

SUMMARY OF BID PRICE

SUPPLY OF MISCELLANEOUS EQUIPMENT

WORK PLAN TO IMPROVE THE ELECTRICITY SUPPLY MODEL FOR HIGH VOLTAGE SUBSTATION TO ENHANCE THE TRANSMISSION SYSTEM STABILITY AND RELIABILITY
LONG-TERM INVESTMENT PLAN TO ACCOMMODATE LARGE POWER CONSUMER
TRANSMISSION SYSTEM IMPROVEMENT PROJECT IN NORTHEASTERN, LOWER NORTHERN, CENTRAL REGIONS AND BANGKOK AREA TO ENHANCE SYSTEM SECURITY
TRANSMISSION SYSTEM DEVELOPMENT IN THE AREA OF NAN PHRAE AND UTTARADIT PROVINCES FOR POWER PURCHASE FROM LAO PDR PROJECTS

No.	Description	Currency	Supply of Equipment	
			Foreign Supply	Local Supply
			CFR Thai Port	Ex-works Price (excluding VAT) Baht
			Amount	Amount
1	Schedule A6 : Grounding Material	THB	84,719.00	1,527,264.00
2	Schedule B5 : Grounding Material	THB	336,749.00	710,776.00
3	Schedule C5 : Grounding Material	THB	42,638.00	391,903.00
4	Schedule D4 : Grounding Material	THB	316,547.00	513,716.00
BID PRICE		THB	780,653.00	Baht 3,143,659.00
IMPORT DUTY		THB	78,065.30	Baht
CUSTOM CLEARANCE		THB	4,683.92	Baht
VAT		THB	60,110.28	Baht 220,056.13
SUMMARY OF MEDIUM COST		THB	923,512.50	Baht 3,363,715.13
SUMMARY OF MEDIUM COST FOR SCHEDULE A6, B5, C5 AND D4		THB	4,287,227.63	
SUMMARY OF MEDIUM COST FOR SCHEDULE A6, B5, C5 AND D4 (ROUNDED)		THB	4,290,000.00	

นายสมชัย เจริญศรีเกษม
ผู้อำนวยการฝ่ายวิศวกรรมระบบส่ง
05 Aug 2026

DRAFT

MEDIUM COST FOR BID NO. IETS-LPLC-TIEC-NPUP-MC1-01

Schedule A1 : Switchyard Lighting Fixture

SUPPLY OF MISCELLANEOUS EQUIPMENT
WORK PLAN TO IMPROVE THE ELECTRICITY SUPPLY MODEL FOR HIGH VOLTAGE SUBSTATION TO ENHANCE THE TRANSMISSION SYSTEM STABILITY AND RELIABILITY

Item No.	Description	Qty.	Unit	**Supply of Equipment** Local Supply Ex-works Price (excluding VAT) Baht	
				Unit Price	Amount
A1-1	Reference : Specification No.611 Flood lighting fixture, LED lamp, 10000 lumen, wide-beam, complete with control gear as per Specification attached	18		10,568.80	190,238.40
A1-2	Tapered galvanized steel lamp post H=5000 mm. complete with 2 A 250 V plug fuse, 20 A 500 V terminal block for accepting 4 sq.mm. of incoming and outgoing cables and anchor bolts as per Dwg. No. ST-LP-0-03 and SD-AB-0-01	2		25,125.10	50,250.20
Total Price for Schedule A1				**Baht**	**240,488.60**

DRAFT

นายสมชัย เจริญศรีเกษม
ผู้อำนวยการฝ่ายวิศวกรรมระบบส่ง
05 Aug 2026

MEDIUM COST FOR BID NO. IETS-LPLC-TIEC-NPUP-MC1-01

Schedule A2 : Solar Lighting Fixture

SUPPLY OF MISCELLANEOUS EQUIPMENT
WORK PLAN TO IMPROVE THE ELECTRICITY SUPPLY MODEL FOR HIGH VOLTAGE SUBSTATION TO ENHANCE THE TRANSMISSION SYSTEM STABILITY AND RELIABILITY

Item No.	Description	Qty.	Unit	**Supply of Equipment** Local Supply Ex-works Price (excluding VAT) Baht	
				Unit Price	Amount
A2-1	Reference : Specification No.611 Solar lighting fixture for fence and access road, LED, All in one type as per Dwg. No. LT-FX-0-03	9		13,390.30	120,512.70
A2-2	Tapered galvanized steel lamp post H=4500 mm. complete with anchor bolts as per Dwg. No. ST-LP-0-03 and SD-AB-0-01	9		19,729.60	177,566.40
	* Equipments which shall be used together as a complete set refering in Article relevant to Liquidated Damages for Late Delivery of Equipment are item Nos. A2-1 with A2-2				
Total Price for Schedule A2				**Baht**	**298,079.10**

นายสมชัย เจริญศรีเกษม
ผู้อำนวยการฝ่ายวิศวกรรมระบบส่ง
05 Aug 2026

DRAFT

MEDIUM COST FOR BID NO. IETS-LPLC-TIEC-NPUP-MC1-01

Schedule A3 : Aluminum Tube

SUPPLY OF MISCELLANEOUS EQUIPMENT

WORK PLAN TO IMPROVE THE ELECTRICITY SUPPLY MODEL FOR HIGH VOLTAGE SUBSTATION TO ENHANCE THE TRANSMISSION SYSTEM STABILITY AND RELIABILITY

Item No.	Description	Qty.	Unit	**Supply of Equipment** Local Supply Ex-works Price (excluding VAT) Baht	
				Unit Price	Amount
	Reference : Specification No.605				
A3-1	Aluminum tube 3.0" IPS Sch.40, 6 meters long	165		5,662.00	934,230.00
A3-2	Aluminum tube 5.0" IPS Sch.40, 6 meters long	75		10,205.00	765,375.00
Total Price for Schedule A3				**Baht**	**1,699,605.00**

DRAFT

นายสมชัย เจริญศรีเกษม
ผู้อำนวยการฝ่ายวิศวกรรมระบบส่ง
05 Aug 2026

MEDIUM COST FOR BID NO. IETS-LPLC-TIEC-NPUP-MC1-01

Schedule A4 : Compression Connector and Miscellaneous Hardware

SUPPLY OF MISCELLANEOUS EQUIPMENT
WORK PLAN TO IMPROVE THE ELECTRICITY SUPPLY MODEL FOR HIGH VOLTAGE SUBSTATION TO ENHANCE THE TRANSMISSION SYSTEM STABILITY AND RELIABILITY

Item No.	Description	Qty.	Unit	Supply of Equipment Local Supply Ex-works Price (excluding VAT) Baht	
				Unit Price	Amount
A4-1	Reference : Specification No.605 Strain clamp for 3/8 inch diameter galvanized steel OHG wire ,PLP Cat. No.A3DD4749T or equal (Legend No.12.21)	45		888.00	39,960.00
A4-2	Compression terminal for 1272 MCM ACSR, straight type, four holes NEMA pad without mounting bolt ,PLP Cat. No.A4DD17829T or equal (Legend No.16.45)	200		487.00	97,400.00
A4-3	Compression tee for 1272 MCM ACSR, four holes NEMA pad ,PLP Cat. No.A4DD16883T or equal (Legend No.17.43)	100		912.00	91,200.00
A4-4	Compression dead end for 1272 MCM ACSR, with non-adjustable clevis bolts, nuts and cotter key, four holes NEMA tap pad ,PLP Cat. No.A4DD16227T or equal (Legend No.24.15)	195		1,733.00	337,935.00
A4-5	Cable clamp for 3/8 inch diameter galvanized steel OHG wire, run to flat surface ,PLP Cat. No.A4DD3792T or equal (Legend No.46.61)	45		140.00	6,300.00

DRAFT

นายสมชัย เจริญศรีเกษม
ผู้อำนวยการฝ่ายวิศวกรรมระบบส่ง
05 Aug 2026

MEDIUM COST FOR BID NO. IETS-LPLC-TIEC-NPUP-MC1-01

Schedule A4 : Compression Connector and Miscellaneous Hardware

SUPPLY OF MISCELLANEOUS EQUIPMENT
WORK PLAN TO IMPROVE THE ELECTRICITY SUPPLY MODEL FOR HIGH VOLTAGE SUBSTATION TO ENHANCE THE TRANSMISSION SYSTEM STABILITY AND RELIABILITY

Item No.	Description	Qty.	Unit	Supply of Equipment Local Supply Ex-works Price (excluding VAT) Baht	
				Unit Price	Amount
A4-6	Ball clevis 16 mm. ,PLP Cat. No.A4DD08248T or equal (Legend No.80.01)	35		142.00	4,970.00
A4-7	Ball eye 16 mm. ,PLP Cat. No.A4DD1114T or equal (Legend No.80.06)	140		112.00	15,680.00
A4-8	Socket clevis 16 mm. ,PLP Cat. No.A4DD10476T or equal (Legend No.80.11)	55		210.00	11,550.00
A4-9	Socket eye with 19 mm. boss ,PLP Cat. No.A4DD17834T or equal (Legend No.80.16)	70		186.00	13,020.00
A4-10	Socket eye with 16 mm. boss ,PLP Cat. No.A4DD17835T or equal (Legend No.80.17)	25		147.00	3,675.00
A4-11	Twisted clevis tongue 20 mm. ,PLP Cat. No.A4DD17798T or equal (Legend No.80.23)	165		276.00	45,540.00
A4-12	Bow shackle 16 mm. ,PLP Cat. No.A4DD14164T or equal (Legend No.80.31)	150		157.00	23,550.00

นายสมชัย เจริญศรีเกษม
ผู้อำนวยการฝ่ายวิศวกรรมระบบส่ง
05 Aug 2026

DRAFT

MEDIUM COST FOR BID NO. IETS-LPLC-TIEC-NPUP-MC1-01

Schedule A4 : Compression Connector and Miscellaneous Hardware

SUPPLY OF MISCELLANEOUS EQUIPMENT
WORK PLAN TO IMPROVE THE ELECTRICITY SUPPLY MODEL FOR HIGH VOLTAGE SUBSTATION TO ENHANCE THE TRANSMISSION SYSTEM STABILITY AND RELIABILITY

Item No.	Description	Qty.	Unit	Supply of Equipment Local Supply Ex-works Price (excluding VAT) Baht	
				Unit Price	Amount
A4-13	Turnbuckle clevis-clevis 3/4 x 12 inch size and take up ,PLP Cat. No.A4DD17520T or equal (Legend No.80.36)	40		1,193.00	47,720.00
A4-14	Turnbuckle clevis-eye 5/8 x 12 inch size and take up ,PLP Cat. No.A4DD17880T or equal (Legend No.80.38)	30		1,235.00	37,050.00
A4-15	Turnbuckle eye-eye 3/4 x 12 inch size and take up ,PLP Cat. No.A4DD17521T or equal (Legend No.80.39)	35		1,344.00	47,040.00
A4-16	Strain yoke plate 200 mm. spacing 18 mm. hole ,PLP Cat. No.A4DD10569T or equal (Legend No.80.41)	60		369.00	22,140.00
A4-17	3.5 inch sub-base 5 inch bc on top and bottom ,PLP Cat. No.A4DD17490T or equal (Legend No.80.51)	310		919.00	284,890.00
A4-18	Galvanized steel bolt, M16, 50 mm. long ,EGAT Cat. No.SD-AB-0-01 or equal (Legend No.90.31)	1180		23.00	27,140.00

นายสมชัย เจริญศรีเกษม
ผู้อำนวยการฝ่ายวิศวกรรมระบบส่ง
05 Aug 2026

DRAFT

MEDIUM COST FOR BID NO. IETS-LPLC-TIEC-NPUP-MC1-01

Schedule A4 : Compression Connector and Miscellaneous Hardware

SUPPLY OF MISCELLANEOUS EQUIPMENT
WORK PLAN TO IMPROVE THE ELECTRICITY SUPPLY MODEL FOR HIGH VOLTAGE SUBSTATION TO ENHANCE THE TRANSMISSION SYSTEM STABILITY AND RELIABILITY

Item No.	Description	Qty.	Unit	**Supply of Equipment** Local Supply Ex-works Price (excluding VAT) Baht	
				Unit Price	Amount
A4-19	Galvanized steel bolt, M16, 55 mm. long ,EGAT Cat. No.SD-AB-0-01 or equal (Legend No.90.32)	15		25.00	375.00
A4-20	Galvanized steel nut for M16 bolt ,EGAT Cat. No.SD-AB-0-01 or equal (Legend No.90.36)	1195		4.00	4,780.00
A4-21	Galvanized steel spring washer for M16 bolt ,EGAT Cat. No.SD-AB-0-01 or equal (Legend No.90.46)	1195		1.00	1,195.00
Total Price for Schedule A4				**Baht**	**1,163,110.00**

DRAFT

นายสมชัย เจริญศรีเกษม
ผู้อำนวยการฝ่ายวิศวกรรมระบบส่ง
05 Aug 2026

MEDIUM COST FOR BID NO. IETS-LPLC-TIEC-NPUP-MC1-01

Schedule A5 : 230 kV and below Bus Fitting

SUPPLY OF MISCELLANEOUS EQUIPMENT
WORK PLAN TO IMPROVE THE ELECTRICITY SUPPLY MODEL FOR HIGH VOLTAGE SUBSTATION TO ENHANCE THE TRANSMISSION SYSTEM STABILITY AND RELIABILITY

Item No.	Description	Qty.	Unit	Currency	**Supply of Equipment** Foreign Supply CFR Thai Port		**Supply of Equipment** Local Supply Ex-works Price (excluding VAT) Baht	
					Unit Price	Amount	Unit Price	Amount
A5-1	Reference : Specification No.605 Tubular bus suspension clamp, ball socket type (ANSI C29.2, type B) for 3 inch IPS aluminum tube ,Burndy Cat. No.CHS20A or equal (Legend No.12.55)	40		THB	1,173.00	46,920.00		
A5-2	Bus support clamp, with 5 inch bc fitting for 1272 MCM ACSR ,Burndy Cat. No.UHKR16A-5B or equal (Legend No.13.45) (Hardware for fixing to base of insulator shall comprise of 5/8 inch-11 UNC bolt and split lockwashers for bolt size 5/8 inch, the length of bolt shall be 35 mm)	15		THB	2,369.00	35,535.00		
A5-3	Bus support clamp, with 3 inch bc fitting for 2x1272 MCM ACSR ,Burndy Cat. No.U2HKR16A-3B or equal (Legend No.13.73) (Hardware for fixing to base of insulator shall comprise of 1/2 inch-13 UNC bolt and split lockwashers, the length of bolt shall be 30 mm)	5		THB	3,612.00	18,060.00		
A5-4	Bus support, with 5 inch bc fitting for 2 inch IPS aluminum tube, slip or rigid fit ,Burndy Cat. No.WOH18A-5B or equal (Legend No.15.43) (Hardware for fixing to base of insulator shall comprise of 5/8 inch-11 UNC bolt and split lockwashers for bolt size 5/8 inch, the length of bolt shall be 35 mm)	45		THB	952.00	42,840.00		

นายสมชัย เจริญศรีเกษม
ผู้อำนวยการฝ่ายวิศวกรรมระบบส่ง
05 Aug 2026

DRAFT

MEDIUM COST FOR BID NO. IETS-LPLC-TIEC-NPUP-MC1-01

Schedule A5 : 230 kV and below Bus Fitting

SUPPLY OF MISCELLANEOUS EQUIPMENT

WORK PLAN TO IMPROVE THE ELECTRICITY SUPPLY MODEL FOR HIGH VOLTAGE SUBSTATION TO ENHANCE THE TRANSMISSION SYSTEM STABILITY AND RELIABILITY

Item No.	Description	Qty.	Unit	Currency	Supply of Equipment Foreign Supply CFR Thai Port		Supply of Equipment Local Supply Ex-works Price (excluding VAT) Baht	
					Unit Price	Amount	Unit Price	Amount
A5-5	Bus support, with 5 inch bc fitting for 3 inch IPS aluminum tube, slip or rigid fit ,Burndy Cat. No.WOH20A-5B or equal (Legend No.15.45) (Hardware for fixing to base of insulator shall comprise of 5/8 inch-11 UNC bolt and split lockwashers for bolt size 5/8 inch, the length of bolt shall be 35 mm)	110		THB	1,317.00	144,870.00		
A5-6	Bus support, with 5 inch bc fitting for 5 inch IPS aluminum tube, slip or rigid fit ,Burndy Cat. No.WOH24A-5B or equal (Legend No.15.47) (Hardware for fixing to base of insulator shall comprise of 5/8 inch-11 UNC bolt and split lockwashers for bolt size 5/8 inch, the length of bolt shall be 35 mm)	130		THB	3,154.00	410,020.00		
A5-7	Expansion bus support coupler, weld type with 5 inch bc fitting for 3 inch IPS Sch.40 aluminum tube, supplied with end cap ,Burndy Cat. No.WXHP20A-5B-SG or equal (Legend No.15.55)	5		THB	6,924.00	34,620.00		
A5-8	Expansion bus support coupler, weld type with 5 inch bc fitting for 5 inch IPS Sch.40 aluminum tube, supplied with end cap ,Burndy Cat. No.WXHP24A-5B-SG5 or equal (Legend No.15.57)	15		THB	10,054.00	150,810.00		
A5-9	Terminal connector, weld type for 4x1272 MCM ACSR (Parallel), six holes ,Burndy Cat. No.W4A54R-6N-SG or equal (Legend No.28.48)	20		THB	2,365.00	47,300.00		

นายสมชัย เจริญศรีเกษม
ผู้อำนวยการฝ่ายวิศวกรรมระบบส่ง
05 Aug 2026

DRAFT

MEDIUM COST FOR BID NO. IETS-LPLC-TIEC-NPUP-MC1-01

Schedule A5 : 230 kV and below Bus Fitting

SUPPLY OF MISCELLANEOUS EQUIPMENT
WORK PLAN TO IMPROVE THE ELECTRICITY SUPPLY MODEL FOR HIGH VOLTAGE SUBSTATION TO ENHANCE THE TRANSMISSION SYSTEM STABILITY AND RELIABILITY

Item No.	Description	Qty.	Unit	Currency	Supply of Equipment		Supply of Equipment	
					Foreign Supply		Local Supply	
					CFR Thai Port		Ex-works Price (excluding VAT) Baht	
					Unit Price	Amount	Unit Price	Amount
A5-10	Terminal connector, weld type for 2x1272 MCM ACSR ,Burndy Cat. No.W2A54R-4N or equal (Legend No.28.63)	585		THB	1,487.00	869,895.00		
A5-11	Terminal connector, weld type for 477 MCM ACSR ,Burndy Cat. No.WA41R-4N or equal (Legend No.29.81)	5		THB	404.00	2,020.00		
A5-12	Terminal connector, weld type for 1272 MCM ACSR ,Burndy Cat. No.WA54R-4N or equal (Legend No.29.83)	300		THB	404.00	121,200.00		
A5-13	Terminal connector, weld type for 2 inch IPS Sch.40 aluminum tube, four holes ,Burndy Cat. No.SWAC18A-34N or equal (Legend No.30.03)	20		THB	332.00	6,640.00		
A5-14	Terminal connector, weld type for 3 inch IPS Sch.40 aluminum tube, four holes ,Burndy Cat. No.SWAC20A-34N-SG or equal (Legend No.30.05)	160		THB	562.00	89,920.00		
A5-15	Terminal connector, weld type for 5 inch IPS Sch.40 aluminum tube, four holes ,Burndy Cat. No.SWAC24A-44N or equal (Legend No.30.07)	50		THB	2,381.00	119,050.00		
A5-16	Expansion terminal connector, weld type for 3 inch IPS Sch.40 aluminum tube, four holes ,Burndy Cat. No.WXA20A-4N-SG4 or equal (Legend No.30.15)	55		THB	5,895.00	324,225.00		
A5-17	Connector angle " T ", weld type for 2 inch IPS aluminum tube run to 80 degree 2 inch IPS aluminum tube tap ,Burndy Cat. No.SWT18A18A-80 or equal (Legend No.39.07)	35		THB	228.00	7,980.00		

นายสมชัย เจริญศรีเกษม
ผู้อำนวยการฝ่ายวิศวกรรมระบบส่ง
05 Aug 2026

DRAFT

MEDIUM COST FOR BID NO. IETS-LPLC-TIEC-NPUP-MC1-01

Schedule A5 : 230 kV and below Bus Fitting

SUPPLY OF MISCELLANEOUS EQUIPMENT

WORK PLAN TO IMPROVE THE ELECTRICITY SUPPLY MODEL FOR HIGH VOLTAGE SUBSTATION TO ENHANCE THE TRANSMISSION SYSTEM STABILITY AND RELIABILITY

Item No.	Description	Qty.	Unit	Currency	Supply of Equipment Foreign Supply CFR Thai Port		Supply of Equipment Local Supply Ex-works Price (excluding VAT) Baht	
					Unit Price	Amount	Unit Price	Amount
A5-18	Connector angle " T ", weld type for 3 inch IPS aluminum tube run to 80 degree 3 inch IPS aluminum tube tap ,Burndy Cat. No.SWT20A20A-80 or equal (Legend No.39.29)	115		THB	692.00	79,580.00		
A5-19	Connector angle " T ", weld type for 5 inch IPS aluminum tube run to 80 degree 3 inch IPS aluminum tube tap ,Burndy Cat. No.SWT24A20A-80 or equal (Legend No.39.48)	60		THB	583.00	34,980.00		
A5-20	Connector " V ", weld type for 2 inch IPS aluminum tube run to 20 degree 2 inch IPS aluminum tube tap ,Burndy Cat. No.SWAT18A18A-20 or equal (Legend No.41.13)	5		THB	719.00	3,595.00		
A5-21	Connector " V ", weld type for 3 inch IPS aluminum tube run to 20 degree 2 inch IPS aluminum tube tap ,Burndy Cat. No.SWAT20A18A-20 or equal (Legend No.41.32)	15		THB	623.00	9,345.00		
A5-22	Connector " V ", weld type for 3 inch IPS aluminum tube run to 20 degree 3 inch IPS aluminum tube tap ,Burndy Cat. No.SWAT20A20A-20 or equal (Legend No.41.34)	35		THB	1,086.00	38,010.00		
A5-23	Connector " V ", weld type for 5 inch IPS aluminum tube run to 20 degree 3 inch IPS aluminum tube tap ,Burndy Cat. No.SWAT24A20A-20 or equal (Legend No.41.53)	80		THB	1,239.00	99,120.00		

DRAFT

นายสมชัย เจริญศรีเกษม
ผู้อำนวยการฝ่ายวิศวกรรมระบบส่ง
05 Aug 2026

MEDIUM COST FOR BID NO. IETS-LPLC-TIEC-NPUP-MC1-01

Schedule A5 : 230 kV and below Bus Fitting

SUPPLY OF MISCELLANEOUS EQUIPMENT

WORK PLAN TO IMPROVE THE ELECTRICITY SUPPLY MODEL FOR HIGH VOLTAGE SUBSTATION TO ENHANCE THE TRANSMISSION SYSTEM STABILITY AND RELIABILITY

Item No.	Description	Qty.	Unit	Currency	Supply of Equipment Foreign Supply CFR Thai Port		Supply of Equipment Local Supply Ex-works Price (excluding VAT) Baht	
					Unit Price	Amount	Unit Price	Amount
A5-24	Bar tap, weld type for 3 inch IPS aluminum tube to four holes NEMA pad ,Burndy Cat. No.SWAB20A-4N or equal (Legend No.42.04)	105		THB	855.00	89,775.00		
A5-25	Bar tap, weld type for 5 inch IPS aluminum tube to four holes NEMA pad ,Burndy Cat. No.SWAB24A-4N or equal (Legend No.42.06)	30		THB	542.00	16,260.00		
A5-26	Coupler, weld type for 2 inch IPS Sch.40 aluminum tube ,Burndy Cat. No.WS18A-F or equal (Legend No.44.02)	45		THB	366.00	16,470.00		
A5-27	Coupler, weld type for 3 inch IPS Sch.40 aluminum tube ,Burndy Cat. No.WS20A-F or equal (Legend No.44.04)	155		THB	589.00	91,295.00		
A5-28	Coupler, weld type for 5 inch IPS Sch.40 aluminum tube ,Burndy Cat. No.WS24A-F or equal (Legend No.44.06)	205		THB	1,534.00	314,470.00		
A5-29	Corona bell, internal type for 2 inch IPS Sch.40 aluminum tube ,Burndy Cat. No.LB18A or equal (Legend No.45.54)	20		THB	174.00	3,480.00		
A5-30	Corona bell, internal type for 3 inch IPS Sch.40 aluminum tube ,Burndy Cat. No.LB20A or equal (Legend No.45.56)	75		THB	201.00	15,075.00		
A5-31	Corona bell, internal type for 5 inch IPS Sch.40 aluminum tube ,Burndy Cat. No.LB24A or equal (Legend No.45.58)	50		THB	340.00	17,000.00		

DRAFT

นายสมชัย เจริญศรีเกษม
ผู้อำนวยการฝ่ายวิศวกรรมระบบส่ง
05 Aug 2026

MEDIUM COST FOR BID NO. IETS-LPLC-TIEC-NPUP-MC1-01

Schedule A5 : 230 kV and below Bus Fitting

SUPPLY OF MISCELLANEOUS EQUIPMENT

WORK PLAN TO IMPROVE THE ELECTRICITY SUPPLY MODEL FOR HIGH VOLTAGE SUBSTATION TO ENHANCE THE TRANSMISSION SYSTEM STABILITY AND RELIABILITY

Item No.	Description	Qty.	Unit	Currency	Supply of Equipment Foreign Supply CFR Thai Port		Supply of Equipment Local Supply Ex-works Price (excluding VAT) Baht	
					Unit Price	Amount	Unit Price	Amount
A5-32	Spacer connector for 2x1272 MCM ACSR, distance between conductor center 100 mm. ,Burndy Cat. No.S2GBP46A-10 or equal (Legend No.47.05)	300		THB	758.00	227,400.00		
A5-33	Spacer connector for 2x1272 MCM ACSR, distance between conductor center 200 mm. ,Burndy Cat. No.S2GBP46A-20 or equal (Legend No.47.15)	60		THB	1,692.00	101,520.00		
A5-34	Spacer connector for 4x1272 MCM ACSR (Parallel), distance between conductor center 100 mm. ,Burndy Cat. No.N4P46A-SG or equal (Legend No.47.21)	10		THB	1,116.00	11,160.00		
A5-35	Stainless steel hexagon head bolts, 0.5-13 inch, 2.5 inch long fully threaded and manufactures of series 18-8 material, coarse thread series class 2A tolerance ,Burndy Cat. No.50x250 HSSB or equal (Legend No.90.51)	1855		THB	44.00	81,620.00		
A5-36	Stainless steel hexagon head bolts, 0.5-13 inch, 3.5 inch long fully threaded and manufactures of series 18-8 material, coarse thread series class 2A tolerance ,Burndy Cat. No.50x350 HSSB or equal (Legend No.90.52)	805		THB	46.00	37,030.00		
A5-37	Stainless steel hexagon head bolts, 0.5-13 inch, 3.0 inch long fully threaded and manufactures of series 18-8 material, coarse thread series class 2A tolerance ,Burndy Cat. No.50x300 HSSB or equal (Legend No.90.54)	2170		THB	47.00	101,990.00		

DRAFT

นายสมชัย เจริญศรีเกษม
ผู้อำนวยการฝ่ายวิศวกรรมระบบส่ง
05 Aug 2026

MEDIUM COST FOR BID NO. IETS-LPLC-TIEC-NPUP-MC1-01

Schedule A5 : 230 kV and below Bus Fitting

SUPPLY OF MISCELLANEOUS EQUIPMENT
WORK PLAN TO IMPROVE THE ELECTRICITY SUPPLY MODEL FOR HIGH VOLTAGE SUBSTATION TO ENHANCE THE TRANSMISSION SYSTEM STABILITY AND RELIABILITY

Item No.	Description	Qty.	Unit	Currency	Supply of Equipment Foreign Supply CFR Thai Port		Supply of Equipment Local Supply Ex-works Price (excluding VAT) Baht	
					Unit Price	Amount	Unit Price	Amount
A5-38	Stainless steel hexagon nuts manufactures of series 18-8 material finish type, coarse thread series class 2B fit for 0.5-13 inch bolts size ,Burndy Cat. No.50 HSSN or equal (Legend No.90.61)	4795		THB	10.00	47,950.00		
A5-39	Stainless steel flat washers manufactures of 18-8 material and of medium design 1.125 inch O.D., 0.594 inch I.D., and 0.125 inch thickness ,Burndy Cat. No.50 FWSS or equal (Legend No.90.66)	9575		THB	14.00	134,050.00		
A5-40	Stainless steel belleville washers manufactures of alloy 301, 302 or 18-8 materials, 1.06 inch O.D., 0.530 inch I.D., 0.095 inch thickness ,Burndy Cat. No.50x106 BWSS or equal (Legend No.90.76)	4795		THB	27.00	129,465.00		
A5-41	Aluminum joint compound in 8-oz bottles ,Burndy Cat. No.P8A or equal (Legend No.90.91)	150		THB	655.00	98,250.00		
Total Price for Schedule A5				**THB**		**4,270,795.00**	**Baht**	

นายสมชัย เจริญศรีเกษม
ผู้อำนวยการฝ่ายวิศวกรรมระบบส่ง
05 Aug 2026

DRAFT

MEDIUM COST FOR BID NO. IETS-LPLC-TIEC-NPUP-MC1-01

Schedule A6 : Grounding Material

SUPPLY OF MISCELLANEOUS EQUIPMENT

WORK PLAN TO IMPROVE THE ELECTRICITY SUPPLY MODEL FOR HIGH VOLTAGE SUBSTATION TO ENHANCE THE TRANSMISSION SYSTEM STABILITY AND RELIABILITY

Item No.	Description	Qty.	Unit	Currency	Supply of Equipment Foreign Supply CFR Thai Port		Supply of Equipment Local Supply Ex-works Price (excluding VAT) Baht	
					Unit Price	Amount	Unit Price	Amount
	Reference : Specification No. 603							
A6-1	Ground rod size 5/8 inch diameter x 10 feet	66		THB	558.00	36,828.00		
A6-2	Exothermic welding mold for connecting copper weld ground rod size 5/8 inch diameter to copper ground wire no. 4/0 AWG ,Kumwell Cat. No.CR2-C-5/84/0 or equal (Legend No.60.02)	3			XXXXX	XXXXX	2,900.00	8,700.00
A6-3	Exothermic welding mold for connecting horizontal cable of no. 4/0 AWG run to horizontal through cable of no. 4/0 AWG copper ground wire tap ,Kumwell Cat. No.CC2-C-4/04/0 or equal (Legend No.60.03)	55			XXXXX	XXXXX	2,389.00	131,395.00
A6-4	Exothermic welding mold for connecting angular cable drop of no. 4/0 AWG copper ground wire to vertical steel flat surface ,Kumwell Cat. No.CS3-Y-4/0 or equal (Legend No.60.04)	29			XXXXX	XXXXX	2,389.00	69,281.00
A6-5	Exothermic welding mold for connecting angular cable drop of no. 4/0 AWG copper ground wire to vertical steel pipe 2-4 inch diameter ,Kumwell Cat. No.CP1-X-4/0 or equal (Legend No.60.05)	3			XXXXX	XXXXX	2,389.00	7,167.00
A6-6	Exothermic welding mold for connecting horizontal to horizontal cable cross of no. 4/0 AWG copper ground wire tap cable, cut cable in same plane ,Kumwell Cat. No.CC4-C-4/04/0 or equal (Legend No.60.06)	2			XXXXX	XXXXX	2,900.00	5,800.00

DRAFT

นายสมชัย เจริญศรีเกษม
ผู้อำนวยการฝ่ายวิศวกรรมระบบส่ง
05 Aug 2026

MEDIUM COST FOR BID NO. IETS-LPLC-TIEC-NPUP-MC1-01

Schedule A6 : Grounding Material

SUPPLY OF MISCELLANEOUS EQUIPMENT

WORK PLAN TO IMPROVE THE ELECTRICITY SUPPLY MODEL FOR HIGH VOLTAGE SUBSTATION TO ENHANCE THE TRANSMISSION SYSTEM STABILITY AND RELIABILITY

Item No.	Description	Qty.	Unit	Currency	**Supply of Equipment** Foreign Supply CFR Thai Port		**Supply of Equipment** Local Supply Ex-works Price (excluding VAT) Baht	
					Unit Price	Amount	Unit Price	Amount
A6-7	Exothermic welding mold for connecting cable of no. 4/0 AWG copper ground wire vertical through to steel flat surface ,Kumwell Cat. No.CS4-Y-4/0 or equal (Legend No.60.07)	62			XXXXX	XXXXX	2,627.00	162,874.00
A6-8	Changeable handle clamp ,Kumwell Cat. No.HCC00-XY or equal (Legend No.60.09)	16			XXXXX	XXXXX	3,902.00	62,432.00
A6-9	Welding powder cartridges for mold ,Kumwell Cat. No.CR2-C-5/84/0 or equal (Legend No.60.10)	7			XXXXX	XXXXX	163.00	1,141.00
A6-10	Welding powder cartridges for mold ,Kumwell Cat. No.CC2-C-4/04/0 or equal (Legend No.60.11)	1547			XXXXX	XXXXX	210.00	324,870.00
A6-11	Welding powder cartridges for mold ,Kumwell Cat. No.CS3-Y-4/0 or equal (Legend No.60.12)	774			XXXXX	XXXXX	166.00	128,484.00
A6-12	Welding powder cartridges for mold ,Kumwell Cat. No.CP1-X-4/0 or equal (Legend No.60.13)	52			XXXXX	XXXXX	166.00	8,632.00
A6-13	Welding powder cartridges for mold ,Kumwell Cat. No.CC4-C-4/04/0 or equal (Legend No.60.14)	31			XXXXX	XXXXX	232.00	7,192.00
A6-14	Welding powder cartridges for mold ,Kumwell Cat. No.CS4-Y-4/0 or equal (Legend No.60.15)	1788			XXXXX	XXXXX	277.00	495,276.00

DRAFT

นายสมชัย เจริญศรีเกษม
ผู้อำนวยการฝ่ายวิศวกรรมระบบส่ง
05 Aug 2026

MEDIUM COST FOR BID NO. IETS-LPLC-TIEC-NPUP-MC1-01

Schedule A6 : Grounding Material

SUPPLY OF MISCELLANEOUS EQUIPMENT

WORK PLAN TO IMPROVE THE ELECTRICITY SUPPLY MODEL FOR HIGH VOLTAGE SUBSTATION TO ENHANCE THE TRANSMISSION SYSTEM STABILITY AND RELIABILITY

Item No.	Description	Qty.	Unit	Currency	**Supply of Equipment** Foreign Supply CFR Thai Port		**Supply of Equipment** Local Supply Ex-works Price (excluding VAT) Baht	
					Unit Price	Amount	Unit Price	Amount
A6-15	Tool kit complete set ,Kumwell Cat. No.KTA000 or equal (Legend No.60.17)	13			XXXXX	XXXXX	4,900.00	63,700.00
A6-16	Flint igniter ,Kumwell Cat. No.KTA014U or equal (Legend No.60.18)	170			XXXXX	XXXXX	296.00	50,320.00
A6-17	Single terminal lug one hole for 4/0 AWG copper ground wire ,Kumwell Cat. No.KGXTEL-4/0 or equal (Legend No.60.19)	6		THB	177.00	1,062.00		
A6-18	Ground connector for 2x4/0 AWG copper ground wire to steel flat surface ,Kumwell Cat. No.GXCCP-G2P or equal (Legend No.60.20d)	87		THB	473.00	41,151.00		
A6-19	Flexible copper braid, 14 inch long, 600 A ,Kumwell Cat. No.KGZFCB 39533 or equal (Legend No.60.21)	2		THB	2,839.00	5,678.00		
Total Price for Schedule A6				**THB**		**84,719.00**	**Baht**	**1,527,264.00**

นายสมชัย เจริญศรีเกษม
ผู้อำนวยการฝ่ายวิศวกรรมระบบส่ง
05 Aug 2026

DRAFT

MEDIUM COST FOR BID NO. IETS-LPLC-TIEC-NPUP-MC1-01

Schedule B1 : Aluminum Tube

SUPPLY OF MISCELLANEOUS EQUIPMENT

LONG-TERM INVESTMENT PLAN TO ACCOMMODATE LARGE POWER CONSUMER

Item No.	Description	Qty.	Unit	**Supply of Equipment** Local Supply Ex-works Price (excluding VAT) Baht	
				Unit Price	Amount
	Reference : Specification No.605				
B1-1	Aluminum tube 3.0" IPS Sch.40, 6 meters long	15		5,662.00	84,930.00
B1-2	Aluminum tube 5.0" IPS Sch.80, 6 meters long	90		16,707.00	1,503,630.00
B1-3	Aluminum tube 3.0" IPS Sch.80, 6 meters long	30		12,038.00	361,140.00
Total Price for Schedule B1				**Baht**	**1,949,700.00**

DRAFT

นายสมชัย เจริญศรีเกษม
ผู้อำนวยการฝ่ายวิศวกรรมระบบส่ง
05 Aug 2026

MEDIUM COST FOR BID NO. IETS-LPLC-TIEC-NPUP-MC1-01

Schedule B2 : Compression Connector and Miscellaneous Hardware

SUPPLY OF MISCELLANEOUS EQUIPMENT

LONG-TERM INVESTMENT PLAN TO ACCOMMODATE LARGE POWER CONSUMER

Item No.	Description	Qty.	Unit	**Supply of Equipment** Local Supply Ex-works Price (excluding VAT) Baht	
				Unit Price	Amount
	Reference : Specification No.605				
B2-1	Aluminum alloy straight compression terminal for 1272 MCM ACSR, four holes NEMA pad ,Lorunser Cat. No.771.059.9 or equal (Legend No.16.45A). In addition, each compression terminal shall be furnished with the following accessories : - Stainless steel bolts, nuts, flat washers and belleville washers - Aluminum alloy streamlined cap for shielding hardware when bolting terminal to flat pad	40		2,033.00	81,320.00
B2-2	Aluminum alloy quadruple bundle suspension coupler, complete with straight compression terminals for 4x1272 MCM ACSR, bolts, nuts and washers ,Lorunser Cat. No.1FB767-133 or equal (Legend No.17.55A)	10		8,027.00	80,270.00
B2-3	Strain clamp for 3/8 inch diameter galvanized steel OHG wire ,PLP Cat. No.A3DD4749T or equal (Legend No.12.21)	25		888.00	22,200.00

DRAFT

นายสมชัย เจริญศรีเกษม
ผู้อำนวยการฝ่ายวิศวกรรมระบบส่ง
05 Aug 2026

MEDIUM COST FOR BID NO. IETS-LPLC-TIEC-NPUP-MC1-01

Schedule B2 : Compression Connector and Miscellaneous Hardware

SUPPLY OF MISCELLANEOUS EQUIPMENT

LONG-TERM INVESTMENT PLAN TO ACCOMMODATE LARGE POWER CONSUMER

Item No.	Description	Qty.	Unit	**Supply of Equipment** Local Supply Ex-works Price (excluding VAT) Baht	
				Unit Price	Amount
B2-4	Compression terminal for 1272 MCM ACSR, angle 15 degree type, four holes NEMA pad without mounting bolt ,PLP Cat. No.A4DD16931T or equal (Legend No.16.49)	30		855.00	25,650.00
B2-5	Compression tee for 1272 MCM ACSR, four holes NEMA pad ,PLP Cat. No.A4DD16883T or equal (Legend No.17.43)	10		912.00	9,120.00
B2-6	Double T connector for 1272 MCM ACSR, four holes NEMA pad ,PLP Cat. No.A4DD17836T or equal (Legend No.17.55)	15		2,466.00	36,990.00
B2-7	Compression dead end tension clamp for 1272 MCM ACSR, with non-adjustable clevis bolts, nuts and cotter key ,PLP Cat. No.A4DD08740T or equal (Legend No.24.45)	30		1,974.00	59,220.00
B2-8	Cable clamp for 3/8 inch diameter galvanized steel OHG wire, run to flat surface ,PLP Cat. No.A4DD3792T or equal (Legend No.46.61)	30		140.00	4,200.00

DRAFT

นายสมชัย เจริญศรีเกษม
ผู้อำนวยการฝ่ายวิศวกรรมระบบส่ง
05 Aug 2026

MEDIUM COST FOR BID NO. IETS-LPLC-TIEC-NPUP-MC1-01

Schedule B2 : Compression Connector and Miscellaneous Hardware

SUPPLY OF MISCELLANEOUS EQUIPMENT

LONG-TERM INVESTMENT PLAN TO ACCOMMODATE LARGE POWER CONSUMER

Item No.	Description	Qty.	Unit	**Supply of Equipment** Local Supply Ex-works Price (excluding VAT) Baht	
				Unit Price	Amount
B2-9	Ball eye 16 mm. ,PLP Cat. No.A4DD1114T or equal (Legend No.80.06)	20		112.00	2,240.00
B2-10	Socket clevis 16 mm. ,PLP Cat. No.A4DD10476T or equal (Legend No.80.11)	10		210.00	2,100.00
B2-11	Socket eye with 16 mm. boss ,PLP Cat. No.A4DD17835T or equal (Legend No.80.17)	15		147.00	2,205.00
B2-12	Twisted clevis tongue 20 mm. ,PLP Cat. No.A4DD17798T or equal (Legend No.80.23)	15		276.00	4,140.00
B2-13	Twisted clevis tongue 16 mm. ,PLP Cat. No.A4DD17730T or equal (Legend No.80.26)	15		242.00	3,630.00
B2-14	Bow shackle 16 mm. ,PLP Cat. No.A4DD14164T or equal (Legend No.80.31)	85		157.00	13,345.00
B2-15	Turnbuckle clevis-eye 5/8 x 12 inch size and take up ,PLP Cat. No.A4DD17880T or equal (Legend No.80.38)	25		1,235.00	30,875.00

DRAFT

นายสมชัย เจริญศรีเกษม
ผู้อำนวยการฝ่ายวิศวกรรมระบบส่ง
05 Aug 2026

MEDIUM COST FOR BID NO. IETS-LPLC-TIEC-NPUP-MC1-01

Schedule B2 : Compression Connector and Miscellaneous Hardware

SUPPLY OF MISCELLANEOUS EQUIPMENT

LONG-TERM INVESTMENT PLAN TO ACCOMMODATE LARGE POWER CONSUMER

Item No.	Description	Qty.	Unit	**Supply of Equipment** Local Supply Ex-works Price (excluding VAT) Baht	
				Unit Price	Amount
B2-16	Strain yoke plate 200 mm. spacing 18 mm. hole ,PLP Cat. No.A4DD10569T or equal (Legend No.80.41)	20		369.00	7,380.00
B2-17	3.5 inch sub-base 5 inch bc on top and bottom ,PLP Cat. No.A4DD17490T or equal (Legend No.80.51)	10		919.00	9,190.00
B2-18	6.0 inch sub-base 3 inch bc on top and bottom ,PLP Cat. No.A4DD17643T or equal (Legend No.80.52)	20		555.00	11,100.00
B2-19	Plate link 19 mm. ,PLP Cat. No.A4DD17828T or equal (Legend No.80.60)	15		128.00	1,920.00
B2-20	U-bolt 20 mm. completed with nuts and washers ,PLP Cat. No.A4DD10547T or equal (Legend No.XX.XX)	10		235.00	2,350.00
B2-21	Galvanized steel bolt, M16, 50 mm. long ,EGAT Cat. No.SD-AB-0-01 or equal (Legend No.90.31)	15		23.00	345.00

DRAFT

นายสมชัย เจริญศรีเกษม
ผู้อำนวยการฝ่ายวิศวกรรมระบบส่ง
05 Aug 2026

MEDIUM COST FOR BID NO. IETS-LPLC-TIEC-NPUP-MC1-01

Schedule B2 : Compression Connector and Miscellaneous Hardware

SUPPLY OF MISCELLANEOUS EQUIPMENT

LONG-TERM INVESTMENT PLAN TO ACCOMMODATE LARGE POWER CONSUMER

Item No.	Description	Qty.	Unit	**Supply of Equipment** Local Supply Ex-works Price (excluding VAT) Baht	
				Unit Price	Amount
B2-22	Galvanized steel bolt, M16, 55 mm. long ,EGAT Cat. No.SD-AB-0-01 or equal (Legend No.90.32)	15		25.00	375.00
B2-23	Galvanized steel nut for M16 bolt ,EGAT Cat. No.SD-AB-0-01 or equal (Legend No.90.36)	30		4.00	120.00
B2-24	Galvanized steel spring washer for M16 bolt ,EGAT Cat. No.SD-AB-0-01 or equal (Legend No.90.46)	30		1.00	30.00
Total Price for Schedule B2				**Baht**	**410,315.00**

DRAFT

นายสมชัย เจริญศรีเกษม
ผู้อำนวยการฝ่ายวิศวกรรมระบบส่ง
05 Aug 2026

MEDIUM COST FOR BID NO. IETS-LPLC-TIEC-NPUP-MC1-01

Schedule B3 : 500 kV Bus Fitting

SUPPLY OF MISCELLANEOUS EQUIPMENT

LONG-TERM INVESTMENT PLAN TO ACCOMMODATE LARGE POWER CONSUMER

Item No.	Description	Qty.	Unit	Currency	**Supply of Equipment** Foreign Supply CFR Thai Port		**Supply of Equipment** Local Supply Ex-works Price (excluding VAT) Baht	
					Unit Price	Amount	Unit Price	Amount
B3-1	Reference : Specification No.605 Aluminum alloy quadruple bus support clamp, with 5 inch bc fitting for 4x1272 MCM ACSR ,SubCon Cat. No.BA07343 or equal (Legend No.13.98A)	5		THB	6,179.00	30,895.00		
B3-2	Bus support, with 5 inch bc fitting for 5 inch IPS aluminum tube, slip or rigid fit ,Lorunser Cat. No.1JB008-140 or equal (Legend No.15.47A)	35		THB	1,942.00	67,970.00		
B3-3	Expansion bus support coupler, weld type with 5 inch bc fitting for 5 inch IPS Sch.80 aluminum tube, supplied with end cap ,Lorunser Cat. No.1KA100-141 or equal (Legend No.15.57A)	5		THB	15,611.00	78,055.00		
B3-4	Bus support, with 5 inch bc fitting for 5 inch IPS aluminum tube, rigid fit ,Lorunser Cat. No.1JJ821-141 or equal (Legend No.15.87A)	5		THB	2,808.00	14,040.00		

นายสมชัย เจริญศรีเกษม
ผู้อำนวยการฝ่ายวิศวกรรมระบบส่ง
05 Aug 2026

DRAFT

MEDIUM COST FOR BID NO. IETS-LPLC-TIEC-NPUP-MC1-01

Schedule B3 : 500 kV Bus Fitting

SUPPLY OF MISCELLANEOUS EQUIPMENT

LONG-TERM INVESTMENT PLAN TO ACCOMMODATE LARGE POWER CONSUMER

Item No.	Description	Qty.	Unit	Currency	**Supply of Equipment** Foreign Supply CFR Thai Port		**Supply of Equipment** Local Supply Ex-works Price (excluding VAT) Baht	
					Unit Price	Amount	Unit Price	Amount
B3-5	Aluminum alloy quadruple bundle connector with six holes NEMA pad, complete with straight compression terminals for 4x1272 MCM ACSR, bolts, nuts and washers ,Lorunser Cat. No.3-19019/1E or equal (Legend No.28.93A). In addition, aluminum alloy streamlined cap for shielding hardware when bolting terminal to flat pad shall be provided.	75		THB	12,727.00	954,525.00		
B3-6	Aluminum alloy quadruple bundle connector with six holes NEMA pad, complete with terminal for 4x1272 MCM ACSR, bolts, nuts and washers ,Lorunser Cat. No.3-19019/1B or equal (Legend No.28.95A). In addition, aluminum alloy streamlined cap for shielding hardware when bolting terminal to flat pad shall be provided.	5		THB	17,213.00	86,065.00		

DRAFT

นายสมชัย เจริญศรีเกษม
ผู้อำนวยการฝ่ายวิศวกรรมระบบส่ง
05 Aug 2026

MEDIUM COST FOR BID NO. IETS-LPLC-TIEC-NPUP-MC1-01

Schedule B3 : 500 kV Bus Fitting

SUPPLY OF MISCELLANEOUS EQUIPMENT

LONG-TERM INVESTMENT PLAN TO ACCOMMODATE LARGE POWER CONSUMER

Item No.	Description	Qty.	Unit	Currency	**Supply of Equipment** Foreign Supply CFR Thai Port		**Supply of Equipment** Local Supply Ex-works Price (excluding VAT) Baht	
					Unit Price	Amount	Unit Price	Amount
B3-7	Aluminum alloy quadruple bundle connector with six holes NEMA pad, complete with clamp for 4x1272 MCM ACSR (through conductor), bolts, nuts and washers ,Lorunser Cat. No.3-19019/2E or equal (Legend No.28.96A)	20		THB	18,637.00	372,740.00		
B3-8	Aluminum alloy quadruple bundle connector for stud terminal, complete with terminal for 4x1272 MCM ACSR, bolts, nuts and washers ,Lorunser Cat. No.3-19019/3 or equal (Legend No.28.99A)	5		THB	19,857.00	99,285.00		
B3-9	Terminal connector, weld type for 5 inch IPS Sch.80 aluminum tube, six holes NEMA pad included with corona bell end cap external type(EHV) ,Lorunser Cat. No.1CA081-143 or equal (Legend No.30.87A)	10		THB	3,535.00	35,350.00		
B3-10	Connector angle " T ", weld type for 5 inch IPS aluminum tube run to 80 degree 3 inch IPS aluminum tube tap (EHV) ,RIBE Cat. No.BA04353 or equal (Legend No.39.48A)	20		THB	817.00	16,340.00		

นายสมชัย เจริญศรีเกษม
ผู้อำนวยการฝ่ายวิศวกรรมระบบส่ง
05 Aug 2026

DRAFT

MEDIUM COST FOR BID NO. IETS-LPLC-TIEC-NPUP-MC1-01

Schedule B3 : 500 kV Bus Fitting

SUPPLY OF MISCELLANEOUS EQUIPMENT

LONG-TERM INVESTMENT PLAN TO ACCOMMODATE LARGE POWER CONSUMER

Item No.	Description	Qty.	Unit	Currency	**Supply of Equipment** Foreign Supply CFR Thai Port		**Supply of Equipment** Local Supply Ex-works Price (excluding VAT) Baht	
					Unit Price	Amount	Unit Price	Amount
B3-11	Connector " V ", weld type for 5 inch IPS aluminum tube run to 20 degree 3 inch IPS aluminum tube tap (EHV) ,RIBE Cat. No.BA04356 or equal (Legend No.41.53A)	10		THB	1,299.00	12,990.00		
B3-12	Corona bell, external type for 5 inch IPS aluminum tube ,Lorunser Cat. No.1RB100-090 or equal (Legend No.45.93A) (This item shall be used together with legend no. 30.87A)	25		THB	1,232.00	30,800.00		
B3-13	Spacer connector for 2x1272 MCM ACSR, distance between conductor center 200 mm. ,Lorunser Cat. No.1QA102-040 or equal (Legend No.47.15A)	10		THB	657.00	6,570.00		
B3-14	Spacer connector for 4x1272 MCM ACSR (Square), distance between conductor center 200 mm. ,RIBE Cat. No.Q4K-203 or equal (Legend No.47.22A)	60		THB	1,577.00	94,620.00		

DRAFT

นายสมชัย เจริญศรีเกษม
ผู้อำนวยการฝ่ายวิศวกรรมระบบส่ง
05 Aug 2026

MEDIUM COST FOR BID NO. IETS-LPLC-TIEC-NPUP-MC1-01

Schedule B3 : 500 kV Bus Fitting

SUPPLY OF MISCELLANEOUS EQUIPMENT

LONG-TERM INVESTMENT PLAN TO ACCOMMODATE LARGE POWER CONSUMER

Item No.	Description	Qty.	Unit	Currency	**Supply of Equipment** Foreign Supply CFR Thai Port		**Supply of Equipment** Local Supply Ex-works Price (excluding VAT) Baht	
					Unit Price	Amount	Unit Price	Amount
B3-15	Aluminum alloy portable earth connector for 5 inch IPS aluminum tube ,Lorunser Cat. No.1DG010-163 or equal (Legend No.48.04A)	10		THB	3,644.00	36,440.00		
B3-16	Aluminum alloy portable earth connector for 4x 1272 MCM ACSR (EHV) ,Lorunser Cat. No.1HG407-041 or equal (Legend No.49.56A)	30		THB	7,222.00	216,660.00		
Total Price for Schedule B3				**THB**		**2,153,345.00**	**Baht**	

นายสมชัย เจริญศรีเกษม
ผู้อำนวยการฝ่ายวิศวกรรมระบบส่ง
05 Aug 2026

DRAFT

MEDIUM COST FOR BID NO. IETS-LPLC-TIEC-NPUP-MC1-01

Schedule B4 : 230 kV and below Bus Fitting

SUPPLY OF MISCELLANEOUS EQUIPMENT

LONG-TERM INVESTMENT PLAN TO ACCOMMODATE LARGE POWER CONSUMER

Item No.	Description	Qty.	Unit	Currency	**Supply of Equipment** Foreign Supply CFR Thai Port		**Supply of Equipment** Local Supply Ex-works Price (excluding VAT) Baht	
					Unit Price	Amount	Unit Price	Amount
B4-1	Reference : Specification No.605 Bus support clamp, with 5 inch bc fitting for 2x1272 MCM ACSR ,Burndy Cat. No.U2HKR16A-5B or equal (Legend No.13.68) (Hardware for fixing to base of insulator shall comprise of 5/8 inch-11 UNC bolt and split lockwashers for bolt size 5/8 inch, the length of bolt shall be 35 mm)	5		THB	3,472.00	17,360.00		
B4-2	Bus support clamp, with 5 inch bc fitting for 4x1272 MCM AAC or ACSR (Parallel) ,Burndy Cat. No.U4HKR16A-5-SG or equal (Legend No.13.98)	5		THB	7,692.00	38,460.00		
B4-3	Bus support clamp, with 3 inch bc fitting for 3 inch IPS aluminum tube, slip or rigid fit ,Burndy Cat. No.UHG20A-3B or equal (Legend No.15.25) (Hardware for fixing to base of insulator shall comprise of 1/2 inch-13 UNC bolt and split lockwashers, the length of bolt shall be 30 mm)	20		THB	3,775.00	75,500.00		

นายสมชัย เจริญศรีเกษม
ผู้อำนวยการฝ่ายวิศวกรรมระบบส่ง
05 Aug 2026

DRAFT

MEDIUM COST FOR BID NO. IETS-LPLC-TIEC-NPUP-MC1-01

Schedule B4 : 230 kV and below Bus Fitting

SUPPLY OF MISCELLANEOUS EQUIPMENT

LONG-TERM INVESTMENT PLAN TO ACCOMMODATE LARGE POWER CONSUMER

Item No.	Description	Qty.	Unit	Currency	Supply of Equipment Foreign Supply CFR Thai Port		Supply of Equipment Local Supply Ex-works Price (excluding VAT) Baht	
					Unit Price	Amount	Unit Price	Amount
B4-4	Expansion bus support clamp, bolt type with 3 inch bc fitting for 3 inch IPS Sch.80 aluminum tube, supplied with end cap ,Lorunser Cat. No.1KA510-090 or equal (Legend No.15.35)	5		THB	5,037.00	25,185.00		
B4-5	Terminal connector, weld type for 1272 MCM ACSR ,Burndy Cat. No.WA54R-4N or equal (Legend No.29.83)	40		THB	404.00	16,160.00		
B4-6	Bar tap, weld type for 3 inch IPS aluminum tube to four holes NEMA pad ,Burndy Cat. No.SWAB20A-4N or equal (Legend No.42.04)	40		THB	855.00	34,200.00		
B4-7	Coupler, weld type for 5 inch IPS Sch.80 aluminum tube ,Burndy Cat. No.WS94A-F or equal (Legend No.44.08)	90		THB	2,806.00	252,540.00		
B4-8	Coupler, bolt type for 3 inch IPS aluminum tube ,Lorunser Cat. No.1AA100-090 or equal (Legend No.43.54)	15		THB	3,510.00	52,650.00		
B4-9	Corona bell, internal type for 3 inch IPS Sch.40 aluminum tube ,Burndy Cat. No.LB20A or equal (Legend No.45.56)	15		THB	201.00	3,015.00		

นายสมชัย เจริญศรีเกษม
ผู้อำนวยการฝ่ายวิศวกรรมระบบส่ง
05 Aug 2026

DRAFT

MEDIUM COST FOR BID NO. IETS-LPLC-TIEC-NPUP-MC1-01

Schedule B4 : 230 kV and below Bus Fitting

SUPPLY OF MISCELLANEOUS EQUIPMENT

LONG-TERM INVESTMENT PLAN TO ACCOMMODATE LARGE POWER CONSUMER

Item No.	Description	Qty.	Unit	Currency	**Supply of Equipment** Foreign Supply CFR Thai Port		**Supply of Equipment** Local Supply Ex-works Price (excluding VAT) Baht	
					Unit Price	Amount	Unit Price	Amount
B4-10	Stainless steel hexagon head bolts, 0.5-13 inch, 2.5 inch long fully threaded and manufactures of series 18-8 material, coarse thread series class 2A tolerance ,Burndy Cat. No.50x250 HSSB or equal (Legend No.90.51)	200		THB	44.00	8,800.00		
B4-11	Stainless steel hexagon head bolts, 0.5-13 inch, 3.5 inch long fully threaded and manufactures of series 18-8 material, coarse thread series class 2A tolerance ,Burndy Cat. No.50x350 HSSB or equal (Legend No.90.52)	895		THB	46.00	41,170.00		
B4-12	Stainless steel hexagon nuts manufactures of series 18-8 material finish type, coarse thread series class 2B fit for 0.5-13 inch bolts size ,Burndy Cat. No.50 HSSN or equal (Legend No.90.61)	1090		THB	10.00	10,900.00		
B4-13	Stainless steel flat washers manufactures of 18-8 material and of medium design 1.125 inch O.D., 0.594 inch I.D., and 0.125 inch thickness ,Burndy Cat. No.50 FWSS or equal (Legend No.90.66)	1785		THB	14.00	24,990.00		

นายสมชัย เจริญศรีเกษม
ผู้อำนวยการฝ่ายวิศวกรรมระบบส่ง
05 Aug 2026

DRAFT

MEDIUM COST FOR BID NO. IETS-LPLC-TIEC-NPUP-MC1-01

Schedule B4 : 230 kV and below Bus Fitting

SUPPLY OF MISCELLANEOUS EQUIPMENT

LONG-TERM INVESTMENT PLAN TO ACCOMMODATE LARGE POWER CONSUMER

Item No.	Description	Qty.	Unit	Currency	**Supply of Equipment** Foreign Supply CFR Thai Port		**Supply of Equipment** Local Supply Ex-works Price (excluding VAT) Baht	
					Unit Price	Amount	Unit Price	Amount
B4-14	Stainless steel belleville washers manufactures of alloy 301, 302 or 18-8 materials, 1.06 inch O.D., 0.530 inch I.D., 0.095 inch thickness ,Burndy Cat. No.50x106 BWSS or equal (Legend No.90.76)	1090		THB	27.00	29,430.00		
B4-15	Aluminum joint compound in 8-oz bottles ,Burndy Cat. No.P8A or equal (Legend No.90.91)	110		THB	655.00	72,050.00		
B4-16	Corona ring ,Lorunser Cat. No.1TZ010-127 or equal (Legend No.90.15)	40		THB	6,073.00	242,920.00		
Total Price for Schedule B4				**THB**		**945,330.00**	**Baht**	

นายสมชัย เจริญศรีเกษม
ผู้อำนวยการฝ่ายวิศวกรรมระบบส่ง
05 Aug 2026

DRAFT

นายสมชัย เจริญศรีเกษม
ผู้อำนวยการฝ่ายวิศวกรรมระบบส่ง
05 Aug 2026

MEDIUM COST FOR BID NO. IETS-LPLC-TIEC-NPUP-MC1-01

Schedule B5 : Grounding Material

SUPPLY OF MISCELLANEOUS EQUIPMENT

LONG-TERM INVESTMENT PLAN TO ACCOMMODATE LARGE POWER CONSUMER

Item No.	Description	Qty.	Unit	Currency	Supply of Equipment		Supply of Equipment	
					Foreign Supply		Local Supply	
					CFR Thai Port		Ex-works Price (excluding VAT) Baht	
					Unit Price	Amount	Unit Price	Amount
B5-1	Reference : Specification No.603 Exothermic welding mold for connecting horizontal cable of no. 4/0 AWG run to horizontal through cable of no. 4/0 AWG copper ground wire tap ,Kumwell Cat. No.CC2-C-4/04/0 or equal (Legend No.60.03)	22			XXXXX	XXXXX	2,389.00	52,558.00
B5-2	Exothermic welding mold for connecting angular cable drop of no. 4/0 AWG copper ground wire to vertical steel flat surface ,Kumwell Cat. No.CS3-Y-4/0 or equal (Legend No.60.04)	9			XXXXX	XXXXX	2,389.00	21,501.00
B5-3	Exothermic welding mold for connecting cable of no. 4/0 AWG copper ground wire vertical through to steel flat surface ,Kumwell Cat. No.CS4-Y-4/0 or equal (Legend No.60.07)	36			XXXXX	XXXXX	2,627.00	94,572.00
B5-4	Changeable handle clamp ,Kumwell Cat. No.HCC00-XY or equal (Legend No.60.09)	7			XXXXX	XXXXX	3,902.00	27,314.00
B5-5	Welding powder cartridges for mold ,Kumwell Cat. No.CC2-C-4/04/0 or equal (Legend No.60.11)	635			XXXXX	XXXXX	210.00	133,350.00

DRAFT

MEDIUM COST FOR BID NO. IETS-LPLC-TIEC-NPUP-MC1-01

Schedule B5 : Grounding Material

SUPPLY OF MISCELLANEOUS EQUIPMENT

LONG-TERM INVESTMENT PLAN TO ACCOMMODATE LARGE POWER CONSUMER

Item No.	Description	Qty.	Unit	Currency	**Supply of Equipment** Foreign Supply CFR Thai Port		**Supply of Equipment** Local Supply Ex-works Price (excluding VAT) Baht	
					Unit Price	Amount	Unit Price	Amount
B5-6	Welding powder cartridges for mold ,Kumwell Cat. No.CS3-Y-4/0 or equal (Legend No.60.12)	262			XXXXX	XXXXX	166.00	43,492.00
B5-7	Welding powder cartridges for mold ,Kumwell Cat. No.CS4-Y-4/0 or equal (Legend No.60.15)	1065			XXXXX	XXXXX	277.00	295,005.00
B5-8	Tool kit complete set ,Kumwell Cat. No.KTA000 or equal (Legend No.60.17)	4			XXXXX	XXXXX	4,900.00	19,600.00
B5-9	Flint igniter ,Kumwell Cat. No.KTA014U or equal (Legend No.60.18)	79			XXXXX	XXXXX	296.00	23,384.00
B5-10	Single terminal lug one hole for 4/0 AWG copper ground wire ,Kumwell Cat. No.KGXTEL-4/0 or equal (Legend No.60.19)	92		THB	177.00	16,284.00		
B5-11	Ground connector for 2x4/0 AWG copper ground wire to steel flat surface ,Kumwell Cat. No.GXCCP-G2P or equal (Legend No.60.20d)	3		THB	473.00	1,419.00		
B5-12	Cable clamp for 4/0 AWG copper ground wire run to cable trench wall (with expansion bolt) ,Kumwell Cat. No.KGRC-A or equal (Legend No.60.22)	539		THB	106.00	57,134.00		

นายสมชัย เจริญศรีเกษม
ผู้อำนวยการฝ่ายวิศวกรรมระบบส่ง
05 Aug 2026

DRAFT

MEDIUM COST FOR BID NO. IETS-LPLC-TIEC-NPUP-MC1-01

Schedule B5 : Grounding Material

SUPPLY OF MISCELLANEOUS EQUIPMENT

LONG-TERM INVESTMENT PLAN TO ACCOMMODATE LARGE POWER CONSUMER

Item No.	Description	Qty.	Unit	Currency	**Supply of Equipment** Foreign Supply CFR Thai Port		**Supply of Equipment** Local Supply Ex-works Price (excluding VAT) Baht	
					Unit Price	Amount	Unit Price	Amount
B5-13	Ground safety mat no. 6 AWG solid copper wire size 1.2 x 1.2 m. Spacing 0.15 x 0.15 m. ,Kumwell Cat. No.CC14-C-#6#6 or equal (Legend No.60.23)	20		THB	13,028.00	260,560.00		
B5-14	Compression terminal for 185 sq.mm. copper ground wire, 2 hole NEMA pad ,Kumwell Cat. No.KTH 400-12DN or equal (Legend No.60.52)	4		THB	338.00	1,352.00		
Total Price for Schedule B5				**THB**		**336,749.00**	**Baht**	**710,776.00**

DRAFT

นายสมชัย เจริญศรีเกษม
ผู้อำนวยการฝ่ายวิศวกรรมระบบส่ง
05 Aug 2026

MEDIUM COST FOR BID NO. IETS-LPLC-TIEC-NPUP-MC1-01

Schedule B6 : Rigid Steel Conduit

SUPPLY OF MISCELLANEOUS EQUIPMENT

LONG-TERM INVESTMENT PLAN TO ACCOMMODATE LARGE POWER CONSUMER

Item No.	Description	Qty.	Unit	**Supply of Equipment** Local Supply Ex-works Price (excluding VAT) Baht	
				Unit Price	Amount
B6-1	Reference : Specification No. 522 Rigid steel conduit 2.0 inch dia., 3.05 m long	120		1,786.40	214,368.00
Total Price for Schedule B6				**Baht**	**214,368.00**

DRAFT

นายสมชัย เจริญศรีเกษม
ผู้อำนวยการฝ่ายวิศวกรรมระบบส่ง
05 Aug 2026

MEDIUM COST FOR BID NO. IETS-LPLC-TIEC-NPUP-MC1-01

Schedule B7 : Conduit Fitting

SUPPLY OF MISCELLANEOUS EQUIPMENT

LONG-TERM INVESTMENT PLAN TO ACCOMMODATE LARGE POWER CONSUMER

Item No.	Description	Qty.	Unit	Currency	**Supply of Equipment** Foreign Supply CFR Thai Port		**Supply of Equipment** Local Supply Ex-works Price (excluding VAT) Baht	
					Unit Price	Amount	Unit Price	Amount
	Reference : Specification No. 522							
B7-1	Bushing for rigid steel conduit 2.0 inch dia.	265		THB	193.60	51,304.00		
B7-2	Lock nut for rigid steel conduit 2.0 inch dia.	265		THB	71.50	18,947.50		
B7-3	Coupling for rigid steel conduit 2.0 inch dia.	85		THB	161.70	13,744.50		
B7-4	Flexible rain tight conduit 2.0 inch dia., 15 meter/package	25		THB	469.70	11,742.50		
B7-5	Connector for flexible rain tight conduit 2.0 inch dia.	170		THB	312.40	53,108.00		
B7-6	Conduit pipe clamp for rigid steel conduit 2.0 inch dia.	190		THB	50.60	9,614.00		
Total Price for Schedule B7				**THB**		**158,460.50**	**Baht**	

นายสมชัย เจริญศรีเกษม
ผู้อำนวยการฝ่ายวิศวกรรมระบบส่ง
05 Aug 2026

DRAFT

MEDIUM COST FOR BID NO. IETS-LPLC-TIEC-NPUP-MC1-01

Schedule C1 : Switchyard Lighting Fixture

SUPPLY OF MISCELLANEOUS EQUIPMENT

LONG-TERM INVESTMENT PLAN TO ACCOMMODATE LARGE POWER CONSUMER

Item No.	Description	Qty.	Unit	**Supply of Equipment** Local Supply Ex-works Price (excluding VAT) Baht	
				Unit Price	Amount
C1-1	Reference : Specification No.611 Flood lighting fixture, LED lamp, 10000 lumen, wide-beam, complete with control gear as per Specification attached	9		10,568.80	95,119.20
C1-2	Tapered galvanized steel lamp post H=5000 mm. complete with 2 A 250 V plug fuse, 20 A 500 V terminal block for accepting 4 sq.mm. of incoming and outgoing cables and anchor bolts as per Dwg. No. ST-LP-0-03 and SD-AB-0-01	6		25,125.10	150,750.60
Total Price for Schedule C1				**Baht**	**245,869.80**

นายสมชัย เจริญศรีเกษม
ผู้อำนวยการฝ่ายวิศวกรรมระบบส่ง
05 Aug 2026

DRAFT

MEDIUM COST FOR BID NO. IETS-LPLC-TIEC-NPUP-MC1-01

Schedule C2 : Aluminum Tube

SUPPLY OF MISCELLANEOUS EQUIPMENT

LONG-TERM INVESTMENT PLAN TO ACCOMMODATE LARGE POWER CONSUMER

Item No.	Description	Qty.	Unit	**Supply of Equipment** Local Supply Ex-works Price (excluding VAT) Baht	
				Unit Price	Amount
	Reference : Specification No.605				
C2-1	Aluminum tube 3.0" IPS Sch.40, 6 meters long	35		5,662.00	198,170.00
C2-2	Aluminum tube 5.0" IPS Sch.40, 6 meters long	10		10,205.00	102,050.00
Total Price for Schedule C2				**Baht**	**300,220.00**

นายสมชัย เจริญศรีเกษม
ผู้อำนวยการฝ่ายวิศวกรรมระบบส่ง
05 Aug 2026

DRAFT

MEDIUM COST FOR BID NO. IETS-LPLC-TIEC-NPUP-MC1-01

Schedule C3 : Compression Connector and Miscellaneous Hardware

SUPPLY OF MISCELLANEOUS EQUIPMENT

LONG-TERM INVESTMENT PLAN TO ACCOMMODATE LARGE POWER CONSUMER

Item No.	Description	Qty.	Unit	**Supply of Equipment** Local Supply Ex-works Price (excluding VAT) Baht	
				Unit Price	Amount
C3-1	Reference : Specification No.605 Strain clamp for 3/8 inch diameter galvanized steel OHG wire ,PLP Cat. No.A3DD4749T or equal (Legend No.12.21)	30		888.00	26,640.00
C3-2	Compression terminal for 1272 MCM ACSR, straight type, four holes NEMA pad without mounting bolt ,PLP Cat. No.A4DD17829T or equal (Legend No.16.45)	75		487.00	36,525.00
C3-3	Compression tee for 1272 MCM ACSR, four holes NEMA pad ,PLP Cat. No.A4DD16883T or equal (Legend No.17.43)	35		912.00	31,920.00
C3-4	Compression dead end for 1272 MCM ACSR, with non-adjustable clevis bolts, nuts and cotter key, four holes NEMA tap pad ,PLP Cat. No.A4DD16227T or equal (Legend No.24.15)	60		1,733.00	103,980.00
C3-5	Cable clamp for 3/8 inch diameter galvanized steel OHG wire, run to flat surface ,PLP Cat. No.A4DD3792T or equal (Legend No.46.61)	50		140.00	7,000.00

DRAFT

นายสมชัย เจริญศรีเกษม
ผู้อำนวยการฝ่ายวิศวกรรมระบบส่ง
05 Aug 2026

MEDIUM COST FOR BID NO. IETS-LPLC-TIEC-NPUP-MC1-01

Schedule C3 : Compression Connector and Miscellaneous Hardware

SUPPLY OF MISCELLANEOUS EQUIPMENT

LONG-TERM INVESTMENT PLAN TO ACCOMMODATE LARGE POWER CONSUMER

Item No.	Description	Qty.	Unit	**Supply of Equipment** Local Supply Ex-works Price (excluding VAT) Baht	
				Unit Price	Amount
C3-6	Ball clevis 16 mm. ,PLP Cat. No.A4DD08248T or equal (Legend No.80.01)	5		142.00	710.00
C3-7	Ball eye 16 mm. ,PLP Cat. No.A4DD1114T or equal (Legend No.80.06)	55		112.00	6,160.00
C3-8	Socket clevis 16 mm. ,PLP Cat. No.A4DD10476T or equal (Legend No.80.11)	10		210.00	2,100.00
C3-9	Socket eye with 19 mm. boss ,PLP Cat. No.A4DD17834T or equal (Legend No.80.16)	25		186.00	4,650.00
C3-10	Socket eye with 16 mm. boss ,PLP Cat. No.A4DD17835T or equal (Legend No.80.17)	20		147.00	2,940.00
C3-11	Twisted clevis tongue 20 mm. ,PLP Cat. No.A4DD17798T or equal (Legend No.80.23)	55		276.00	15,180.00
C3-12	Bow shackle 16 mm. ,PLP Cat. No.A4DD14164T or equal (Legend No.80.31)	60		157.00	9,420.00
C3-13	Turnbuckle clevis-clevis 3/4 x 12 inch size and take up ,PLP Cat. No.A4DD17520T or equal (Legend No.80.36)	25		1,193.00	29,825.00

DRAFT

นายสมชัย เจริญศรีเกษม
ผู้อำนวยการฝ่ายวิศวกรรมระบบส่ง
05 Aug 2026

MEDIUM COST FOR BID NO. IETS-LPLC-TIEC-NPUP-MC1-01

Schedule C3 : Compression Connector and Miscellaneous Hardware

SUPPLY OF MISCELLANEOUS EQUIPMENT

LONG-TERM INVESTMENT PLAN TO ACCOMMODATE LARGE POWER CONSUMER

Item No.	Description	Qty.	Unit	**Supply of Equipment** Local Supply Ex-works Price (excluding VAT) Baht	
				Unit Price	Amount
C3-14	Turnbuckle clevis-eye 5/8 x 12 inch size and take up ,PLP Cat. No.A4DD17880T or equal (Legend No.80.38)	20		1,235.00	24,700.00
C3-15	Turnbuckle eye-eye 3/4 x 12 inch size and take up ,PLP Cat. No.A4DD17521T or equal (Legend No.80.39)	5		1,344.00	6,720.00
C3-16	Strain yoke plate 200 mm. spacing 18 mm. hole ,PLP Cat. No.A4DD10569T or equal (Legend No.80.41)	10		369.00	3,690.00
C3-17	Strain yoke plate 200 mm. spacing 20.5 mm. hole ,PLP Cat. No.A4DD4372T or equal (Legend No.80.42)	5		319.00	1,595.00
C3-18	3.5 inch sub-base 5 inch bc on top and bottom ,PLP Cat. No.A4DD17490T or equal (Legend No.80.51)	40		919.00	36,760.00
C3-19	Galvanized steel bolt, M16, 50 mm. long ,EGAT Cat. No.SD-AB-0-01 or equal (Legend No.90.31)	110		23.00	2,530.00
C3-20	Galvanized steel bolt, M16, 55 mm. long ,EGAT Cat. No.SD-AB-0-01 or equal (Legend No.90.32)	30		25.00	750.00

นายสมชัย เจริญศรีเกษม
ผู้อำนวยการฝ่ายวิศวกรรมระบบส่ง
05 Aug 2026

DRAFT

MEDIUM COST FOR BID NO. IETS-LPLC-TIEC-NPUP-MC1-01

Schedule C3 : Compression Connector and Miscellaneous Hardware

SUPPLY OF MISCELLANEOUS EQUIPMENT

LONG-TERM INVESTMENT PLAN TO ACCOMMODATE LARGE POWER CONSUMER

Item No.	Description	Qty.	Unit	**Supply of Equipment** Local Supply Ex-works Price (excluding VAT) Baht	
				Unit Price	Amount
C3-21	Galvanized steel nut for M16 bolt ,EGAT Cat. No.SD-AB-0-01 or equal (Legend No.90.36)	140		4.00	560.00
C3-22	Galvanized steel spring washer for M16 bolt ,EGAT Cat. No.SD-AB-0-01 or equal (Legend No.90.46)	140		1.00	140.00
Total Price for Schedule C3				**Baht**	**354,495.00**

นายสมชัย เจริญศรีเกษม
ผู้อำนวยการฝ่ายวิศวกรรมระบบส่ง
05 Aug 2026

DRAFT

MEDIUM COST FOR BID NO. IETS-LPLC-TIEC-NPUP-MC1-01

Schedule C4 : 230 kV and below Bus Fitting

SUPPLY OF MISCELLANEOUS EQUIPMENT

LONG-TERM INVESTMENT PLAN TO ACCOMMODATE LARGE POWER CONSUMER

Item No.	Description	Qty.	Unit	Currency	**Supply of Equipment** Foreign Supply CFR Thai Port		**Supply of Equipment** Local Supply Ex-works Price (excluding VAT) Baht	
					Unit Price	Amount	Unit Price	Amount
C4-1	Reference : Specification No.605 Tubular bus suspension clamp, ball socket type (ANSI C29.2, type B) for 2 inch IPS aluminum tube ,Burndy Cat. No.CHS18A or equal (Legend No.12.53)	5		THB	1,173.00	5,865.00		
C4-2	Tubular bus suspension clamp, ball socket type (ANSI C29.2, type B) for 3 inch IPS aluminum tube ,Burndy Cat. No.CHS20A or equal (Legend No.12.55)	5		THB	1,173.00	5,865.00		
C4-3	Bus support clamp, with 5 inch bc fitting for 1272 MCM ACSR ,Burndy Cat. No.UHKR16A-5B or equal (Legend No.13.45) (Hardware for fixing to base of insulator shall comprise of 5/8 inch-11 UNC bolt and split lockwashers for bolt size 5/8 inch, the length of bolt shall be 35 mm)	10		THB	2,369.00	23,690.00		
C4-4	Bus support clamp, with 3 inch bc fitting for 1272 MCM ACSR ,Burndy Cat. No.UHKR16A-3B or equal (Legend No.13.55) (Hardware for fixing to base of insulator shall comprise of 1/2 inch-13 UNC bolt and split lockwashers, the length of bolt shall be 30 mm)	5		THB	2,144.00	10,720.00		
C4-5	Bus support clamp, with 3 inch bc fitting for 2x1272 MCM ACSR ,Burndy Cat. No.U2HKR16A-3B or equal (Legend No.13.73) (Hardware for fixing to base of insulator shall comprise of 1/2 inch-13 UNC bolt and split lockwashers, the length of bolt shall be 30 mm)	5		THB	3,612.00	18,060.00		
C4-6	Bus support clamp, with 3 inch bc fitting for 2 inch IPS aluminum tube, slip or rigid fit ,Burndy Cat. No.UHG18A-3-B or equal (Legend No.15.23) (Hardware for fixing to base of insulator shall comprise of 1/2 inch-13 UNC bolt and split lockwashers, the length of bolt shall be 30 mm)	5		THB	2,408.00	12,040.00		

นายสมชัย เจริญศรีเกษม
ผู้อำนวยการฝ่ายวิศวกรรมระบบส่ง
05 Aug 2026

DRAFT

MEDIUM COST FOR BID NO. IETS-LPLC-TIEC-NPUP-MC1-01

Schedule C4 : 230 kV and below Bus Fitting

SUPPLY OF MISCELLANEOUS EQUIPMENT

LONG-TERM INVESTMENT PLAN TO ACCOMMODATE LARGE POWER CONSUMER

Item No.	Description	Qty.	Unit	Currency	**Supply of Equipment** Foreign Supply CFR Thai Port		**Supply of Equipment** Local Supply Ex-works Price (excluding VAT) Baht	
					Unit Price	Amount	Unit Price	Amount
C4-7	Bus support clamp, with 3 inch bc fitting for 3 inch IPS aluminum tube, slip or rigid fit ,Burndy Cat. No.UHG20A-3B or equal (Legend No.15.25) (Hardware for fixing to base of insulator shall comprise of 1/2 inch-13 UNC bolt and split lockwashers, the length of bolt shall be 30 mm)	5		THB	3,775.00	18,875.00		
C4-8	Bus support, with 5 inch bc fitting for 2 inch IPS aluminum tube, slip or rigid fit ,Burndy Cat. No.WOH18A-5B or equal (Legend No.15.43) (Hardware for fixing to base of insulator shall comprise of 5/8 inch-11 UNC bolt and split lockwashers for bolt size 5/8 inch, the length of bolt shall be 35 mm)	10		THB	952.00	9,520.00		
C4-9	Bus support, with 5 inch bc fitting for 3 inch IPS aluminum tube, slip or rigid fit ,Burndy Cat. No.WOH20A-5B or equal (Legend No.15.45) (Hardware for fixing to base of insulator shall comprise of 5/8 inch-11 UNC bolt and split lockwashers for bolt size 5/8 inch, the length of bolt shall be 35 mm)	20		THB	1,317.00	26,340.00		
C4-10	Bus support, with 5 inch bc fitting for 5 inch IPS aluminum tube, slip or rigid fit ,Burndy Cat. No.WOH24A-5B or equal (Legend No.15.47) (Hardware for fixing to base of insulator shall comprise of 5/8 inch-11 UNC bolt and split lockwashers for bolt size 5/8 inch, the length of bolt shall be 35 mm)	10		THB	3,154.00	31,540.00		
C4-11	Terminal connector, weld type for 2x1272 MCM ACSR ,Burndy Cat. No.W2A54R-4N or equal (Legend No.28.63)	45		THB	1,487.00	66,915.00		
C4-12	Terminal connector, weld type for 1272 MCM ACSR ,Burndy Cat. No.WA54R-4N or equal (Legend No.29.83)	155		THB	404.00	62,620.00		

นายสมชัย เจริญศรีเกษม
ผู้อำนวยการฝ่ายวิศวกรรมระบบส่ง

DRAFT

MEDIUM COST FOR BID NO. IETS-LPLC-TIEC-NPUP-MC1-01

Schedule C4 : 230 kV and below Bus Fitting

SUPPLY OF MISCELLANEOUS EQUIPMENT

LONG-TERM INVESTMENT PLAN TO ACCOMMODATE LARGE POWER CONSUMER

Item No.	Description	Qty.	Unit	Currency	**Supply of Equipment** Foreign Supply CFR Thai Port		**Supply of Equipment** Local Supply Ex-works Price (excluding VAT) Baht	
					Unit Price	Amount	Unit Price	Amount
C4-13	Terminal connector 90 degree, weld type for 1272 MCM ACSR ,Burndy Cat. No.WA54R-4N-90 or equal (Legend No.29.93)	10		THB	251.00	2,510.00		
C4-14	Terminal connector, weld type for 2 inch IPS Sch.40 aluminum tube, four holes ,Burndy Cat. No.SWAC18A-34N or equal (Legend No.30.03)	10		THB	332.00	3,320.00		
C4-15	Terminal connector, weld type for 3 inch IPS Sch.40 aluminum tube, four holes ,Burndy Cat. No.SWAC20A-34N-SG or equal (Legend No.30.05)	10		THB	562.00	5,620.00		
C4-16	Expansion terminal connector, weld type for 2 inch IPS Sch.40 aluminum tube, four holes ,Burndy Cat. No.WXA18A-4N-SG1 or equal (Legend No.30.13)	5		THB	4,911.00	24,555.00		
C4-17	Expansion terminal connector, weld type for 3 inch IPS Sch.40 aluminum tube, four holes ,Burndy Cat. No.WXA20A-4N-SG4 or equal (Legend No.30.15)	5		THB	5,895.00	29,475.00		
C4-18	Connector angle " T ", weld type for 2 inch IPS aluminum tube run to 80 degree 2 inch IPS aluminum tube tap ,Burndy Cat. No.SWT18A18A-80 or equal (Legend No.39.07)	40		THB	228.00	9,120.00		
C4-19	Connector angle " T ", weld type for 5 inch IPS aluminum tube run to 80 degree 3 inch IPS aluminum tube tap ,Burndy Cat. No.SWT24A20A-80 or equal (Legend No.39.48)	15		THB	583.00	8,745.00		
C4-20	Connector " V ", weld type for 3 inch IPS aluminum tube run to 20 degree 2 inch IPS aluminum tube tap ,Burndy Cat. No.SWAT20A18A-20 or equal (Legend No.41.32)	20		THB	623.00	12,460.00		
C4-21	Connector " V ", weld type for 5 inch IPS aluminum tube run to 20 degree 3 inch IPS aluminum tube tap ,Burndy Cat. No.SWAT24A20A-20 or equal (Legend No.41.53)	10		THB	1,239.00	12,390.00		
C4-22	Bar tap, weld type for 2 inch IPS aluminum tube to four holes NEMA pad ,Burndy Cat. No.SWAB19A-34N or equal (Legend No.42.02)	10		THB	661.00	6,610.00		

นายสมชัย เจริญศรีเกษม
ผู้อำนวยการฝ่ายวิศวกรรมระบบส่ง

DRAFT

MEDIUM COST FOR BID NO. IETS-LPLC-TIEC-NPUP-MC1-01

Schedule C4 : 230 kV and below Bus Fitting

SUPPLY OF MISCELLANEOUS EQUIPMENT

LONG-TERM INVESTMENT PLAN TO ACCOMMODATE LARGE POWER CONSUMER

Item No.	Description	Qty.	Unit	Currency	**Supply of Equipment** Foreign Supply CFR Thai Port		**Supply of Equipment** Local Supply Ex-works Price (excluding VAT) Baht	
					Unit Price	Amount	Unit Price	Amount
C4-23	Bar tap, weld type for 3 inch IPS aluminum tube to four holes NEMA pad ,Burndy Cat. No.SWAB20A-4N or equal (Legend No.42.04)	10		THB	855.00	8,550.00		
C4-24	Coupler, weld type for 3 inch IPS Sch.40 aluminum tube ,Burndy Cat. No.WS20A-F or equal (Legend No.44.04)	25		THB	589.00	14,725.00		
C4-25	Coupler, weld type for 5 inch IPS Sch.40 aluminum tube ,Burndy Cat. No.WS24A-F or equal (Legend No.44.06)	15		THB	1,534.00	23,010.00		
C4-26	Corona bell, internal type for 2 inch IPS Sch.40 aluminum tube ,Burndy Cat. No.LB18A or equal (Legend No.45.54)	10		THB	174.00	1,740.00		
C4-27	Corona bell, internal type for 3 inch IPS Sch.40 aluminum tube ,Burndy Cat. No.LB20A or equal (Legend No.45.56)	20		THB	201.00	4,020.00		
C4-28	Corona bell, internal type for 5 inch IPS Sch.40 aluminum tube ,Burndy Cat. No.LB24A or equal (Legend No.45.58)	10		THB	340.00	3,400.00		
C4-29	Spacer connector for 2x1272 MCM ACSR, distance between conductor center 100 mm. ,Burndy Cat. No.S2GBP46A-10 or equal (Legend No.47.05)	20		THB	758.00	15,160.00		
C4-30	Spacer connector for 2x1272 MCM ACSR, distance between conductor center 200 mm. ,Burndy Cat. No.S2GBP46A-20 or equal (Legend No.47.15)	20		THB	1,692.00	33,840.00		
C4-31	Stainless steel hexagon head bolts, 0.5-13 inch, 2.5 inch long fully threaded and manufactures of series 18-8 material, coarse thread series class 2A tolerance ,Burndy Cat. No.50x250 HSSB or equal (Legend No.90.51)	510		THB	44.00	22,440.00		
C4-32	Stainless steel hexagon head bolts, 0.5-13 inch, 3.0 inch long fully threaded and manufactures of series 18-8 material, coarse thread series class 2A tolerance ,Burndy Cat. No.50x300 HSSB or equal (Legend No.90.54)	850		THB	47.00	39,950.00		

นายสมชัย เจริญศรีเกษม
ผู้อำนวยการฝ่ายวิศวกรรมระบบส่ง
05 Aug 2026

DRAFT

MEDIUM COST FOR BID NO. IETS-LPLC-TIEC-NPUP-MC1-01

Schedule C4 : 230 kV and below Bus Fitting

SUPPLY OF MISCELLANEOUS EQUIPMENT

LONG-TERM INVESTMENT PLAN TO ACCOMMODATE LARGE POWER CONSUMER

Item No.	Description	Qty.	Unit	Currency	**Supply of Equipment** Foreign Supply CFR Thai Port		**Supply of Equipment** Local Supply Ex-works Price (excluding VAT) Baht	
					Unit Price	Amount	Unit Price	Amount
C4-33	Stainless steel hexagon nuts manufactures of series 18-8 material finish type, coarse thread series class 2B fit for 0.5-13 inch bolts size ,Burndy Cat. No.50 HSSN or equal (Legend No.90.61)	1355		THB	10.00	13,550.00		
C4-34	Stainless steel flat washers manufactures of 18-8 material and of medium design 1.125 inch O.D., 0.594 inch I.D., and 0.125 inch thickness ,Burndy Cat. No.50 FWSS or equal (Legend No.90.66)	2700		THB	14.00	37,800.00		
C4-35	Stainless steel belleville washers manufactures of alloy 301, 302 or 18-8 materials, 1.06 inch O.D., 0.530 inch I.D., 0.095 inch thickness ,Burndy Cat. No.50x106 BWSS or equal (Legend No.90.76)	1355		THB	27.00	36,585.00		
C4-36	Aluminum joint compound in 8-oz bottles ,Burndy Cat. No.P8A or equal (Legend No.90.91)	110		THB	655.00	72,050.00		
Total Price for Schedule C4				**THB**		**733,675.00**	**Baht**	

นายสมชัย เจริญศรีเกษม
ผู้อำนวยการฝ่ายวิศวกรรมระบบส่ง
05 Aug 2026

DRAFT

นายสมชัย เจริญศรีเกษม
ผู้อำนวยการฝ่ายวิศวกรรมระบบส่ง
05 Aug 2026

MEDIUM COST FOR BID NO. IETS-LPLC-TIEC-NPUP-MC1-01

Schedule C5 : Grounding Material

SUPPLY OF MISCELLANEOUS EQUIPMENT

LONG-TERM INVESTMENT PLAN TO ACCOMMODATE LARGE POWER CONSUMER

Item No.	Description	Qty.	Unit	Currency	Supply of Equipment		Supply of Equipment	
					Foreign Supply		Local Supply	
					CFR Thai Port		Ex-works Price (excluding VAT) Baht	
					Unit Price	Amount	Unit Price	Amount
	Reference : Specification No. 603							
C5-1	Exothermic welding mold for connecting horizontal cable of no. 4/0 AWG run to horizontal through cable of no. 4/0 AWG copper ground wire tap ,Kumwell Cat. No.CC2-C-4/04/0 or equal (Legend No.60.03)	15			XXXXX	XXXXX	2,389.00	35,835.00
C5-2	Exothermic welding mold for connecting angular cable drop of no. 4/0 AWG copper ground wire to vertical steel flat surface ,Kumwell Cat. No.CS3-Y-4/0 or equal (Legend No.60.04)	6			XXXXX	XXXXX	2,389.00	14,334.00
C5-3	Exothermic welding mold for connecting angular cable drop of no. 4/0 AWG copper ground wire to vertical steel pipe 2-4 inch diameter ,Kumwell Cat. No.CP1-X-4/0 or equal (Legend No.60.05)	1			XXXXX	XXXXX	2,389.00	2,389.00
C5-4	Exothermic welding mold for connecting cable of no. 4/0 AWG copper ground wire vertical through to steel flat surface ,Kumwell Cat. No.CS4-Y-4/0 or equal (Legend No.60.07)	19			XXXXX	XXXXX	2,627.00	49,913.00

DRAFT

นายสมชัย เจริญศรีเกษม
ผู้อำนวยการฝ่ายวิศวกรรมระบบส่ง
05 Aug 2026

MEDIUM COST FOR BID NO. IETS-LPLC-TIEC-NPUP-MC1-01

Schedule C5 : Grounding Material

SUPPLY OF MISCELLANEOUS EQUIPMENT

LONG-TERM INVESTMENT PLAN TO ACCOMMODATE LARGE POWER CONSUMER

Item No.	Description	Qty.	Unit	Currency	Supply of Equipment		Supply of Equipment	
					Foreign Supply		Local Supply	
					CFR Thai Port		Ex-works Price (excluding VAT) Baht	
					Unit Price	Amount	Unit Price	Amount
C5-5	Changeable handle clamp ,Kumwell Cat. No.HCC00-XY or equal (Legend No.60.09)	4			XXXXX	XXXXX	3,902.00	15,608.00
C5-6	Welding powder cartridges for mold ,Kumwell Cat. No.CC2-C-4/04/0 or equal (Legend No.60.11)	386			XXXXX	XXXXX	210.00	81,060.00
C5-7	Welding powder cartridges for mold ,Kumwell Cat. No.CS3-Y-4/0 or equal (Legend No.60.12)	147			XXXXX	XXXXX	166.00	24,402.00
C5-8	Welding powder cartridges for mold ,Kumwell Cat. No.CP1-X-4/0 or equal (Legend No.60.13)	18			XXXXX	XXXXX	166.00	2,988.00
C5-9	Welding powder cartridges for mold ,Kumwell Cat. No.CS4-Y-4/0 or equal (Legend No.60.15)	498			XXXXX	XXXXX	277.00	137,946.00
C5-10	Tool kit complete set ,Kumwell Cat. No.KTA000 or equal (Legend No.60.17)	3			XXXXX	XXXXX	4,900.00	14,700.00
C5-11	Flint igniter ,Kumwell Cat. No.KTA014U or equal (Legend No.60.18)	43			XXXXX	XXXXX	296.00	12,728.00
C5-12	Single terminal lug one hole for 4/0 AWG copper ground wire ,Kumwell Cat. No.KGXTEL-4/0 or equal (Legend No.60.19)	3		THB	177.00	531.00		

DRAFT

นายสมชัย เจริญศรีเกษม
ผู้อำนวยการฝ่ายวิศวกรรมระบบส่ง
05 Aug 2026

MEDIUM COST FOR BID NO. IETS-LPLC-TIEC-NPUP-MC1-01

Schedule C5 : Grounding Material

SUPPLY OF MISCELLANEOUS EQUIPMENT

LONG-TERM INVESTMENT PLAN TO ACCOMMODATE LARGE POWER CONSUMER

Item No.	Description	Qty.	Unit	Currency	**Supply of Equipment** Foreign Supply CFR Thai Port		**Supply of Equipment** Local Supply Ex-works Price (excluding VAT) Baht	
					Unit Price	Amount	Unit Price	Amount
C5-13	Ground connector for 2x4/0 AWG copper ground wire to steel flat surface ,Kumwell Cat. No.GXCCP-G2P or equal (Legend No.60.20d)	18		THB	473.00	8,514.00		
C5-14	Flexible copper braid, 14 inch long, 600 A ,Kumwell Cat. No.KGZFCB 39533 or equal (Legend No.60.21)	5		THB	2,839.00	14,195.00		
C5-15	Cable clamp for 4/0 AWG copper ground wire run to cable trench wall (with expansion bolt) ,Kumwell Cat. No.KGRC-A or equal (Legend No.60.22)	183		THB	106.00	19,398.00		
Total Price for Schedule C5				**THB**		**42,638.00**	**Baht**	**391,903.00**

DRAFT

MEDIUM COST FOR BID NO. IETS-LPLC-TIEC-NPUP-MC1-01

Schedule D1 : Compression Connector and Miscellaneous Hardware

SUPPLY OF MISCELLANEOUS EQUIPMENTSUPPLY OF MISCELLANEOUS EQUIPMENT TRANSMISSION SYSTEM DEVELOPMENT IN THE AREA OF NAN PHRAE AND UTTARADIT PROVINCES FOR POWER PURCHASE FROM LAO PDR PROJECTS

Item No.	Description	Qty.	Unit	Supply of Equipment Local Supply Ex-works Price (excluding VAT) Baht	
				Unit Price	Amount
D1-1	Reference : Specification No.605 Aluminum alloy straight compression terminal for 1272 MCM ACSR, four holes NEMA pad ,Lorunser Cat. No.771.059.9 or equal (Legend No.16.45A). In addition, each compression terminal shall be furnished with the following accessories : - Stainless steel bolts, nuts, flat washers and belleville washers - Aluminum alloy streamlined cap for shielding hardware when bolting terminal to flat pad	55		2,033.00	111,815.00
D1-2	500 kV Suspension insulator assembly (A903), excluding insulators, as per drawing no. SE-IS-9-01-02/03	15	set	28,031.00	420,465.00
D1-3	Strain clamp for 3/8 inch diameter galvanized steel OHG wire ,PLP Cat. No.A3DD4749T or equal (Legend No.12.21)	10		888.00	8,880.00

DRAFT

นายสมชัย เจริญศรีเกษม
ผู้อำนวยการฝ่ายวิศวกรรมระบบส่ง
05 Aug 2026

MEDIUM COST FOR BID NO. IETS-LPLC-TIEC-NPUP-MC1-01

Schedule D1 : Compression Connector and Miscellaneous Hardware

SUPPLY OF MISCELLANEOUS EQUIPMENTSUPPLY OF MISCELLANEOUS EQUIPMENT TRANSMISSION SYSTEM DEVELOPMENT IN THE AREA OF NAN PHRAE AND UTTARADIT PROVINCES FOR POWER PURCHASE FROM LAO PDR PROJECTS

Item No.	Description	Qty.	Unit	Supply of Equipment Local Supply Ex-works Price (excluding VAT) Baht	
				Unit Price	Amount
D1-4	Compression terminal for 1272 MCM ACSR, straight type, four holes NEMA pad without mounting bolt ,PLP Cat. No.A4DD17829T or equal (Legend No.16.45)	30		487.00	14,610.00
D1-5	Compression tee for 1272 MCM ACSR, four holes NEMA pad ,PLP Cat. No.A4DD16883T or equal (Legend No.17.43)	15		912.00	13,680.00
D1-6	Cable clamp for 3/8 inch diameter galvanized steel OHG wire, run to flat surface ,PLP Cat. No.A4DD3792T or equal (Legend No.46.61)	10		140.00	1,400.00
D1-7	Ball eye 16 mm. ,PLP Cat. No.A4DD1114T or equal (Legend No.80.06)	5		112.00	560.00
D1-8	Socket eye with 16 mm. boss ,PLP Cat. No.A4DD17835T or equal (Legend No.80.17)	5		147.00	735.00

DRAFT

นายสมชัย เจริญศรีเกษม
ผู้อำนวยการฝ่ายวิศวกรรมระบบส่ง
05 Aug 2026

MEDIUM COST FOR BID NO. IETS-LPLC-TIEC-NPUP-MC1-01

Schedule D1 : Compression Connector and Miscellaneous Hardware

SUPPLY OF MISCELLANEOUS EQUIPMENTSUPPLY OF MISCELLANEOUS EQUIPMENT TRANSMISSION SYSTEM DEVELOPMENT IN THE AREA OF NAN PHRAE AND UTTARADIT PROVINCES FOR POWER PURCHASE FROM LAO PDR PROJECTS

Item No.	Description	Qty.	Unit	**Supply of Equipment** Local Supply Ex-works Price (excluding VAT) Baht	
				Unit Price	Amount
D1-9	Bow shackle 16 mm. ,PLP Cat. No.A4DD14164T or equal (Legend No.80.31)	10		157.00	1,570.00
D1-10	Turnbuckle clevis-eye 5/8 x 12 inch size and take up ,PLP Cat. No.A4DD17880T or equal (Legend No.80.38)	5		1,235.00	6,175.00
Total Price for Schedule D1				**Baht**	**579,890.00**

นายสมชัย เจริญศรีเกษม
ผู้อำนวยการฝ่ายวิศวกรรมระบบส่ง
05 Aug 2026

DRAFT

MEDIUM COST FOR BID NO. IETS-LPLC-TIEC-NPUP-MC1-01

Schedule D2 : 500 kV Bus Fitting

SUPPLY OF MISCELLANEOUS EQUIPMENTSUPPLY OF MISCELLANEOUS EQUIPMENT
TRANSMISSION SYSTEM DEVELOPMENT IN THE AREA OF NAN PHRAE AND UTTARADIT PROVINCES FOR POWER PURCHASE FROM LAO PDR PROJECTS

Item No.	Description	Qty.	Unit	Currency	Supply of Equipment		Supply of Equipment	
					Foreign Supply		Local Supply	
					CFR Thai Port		Ex-works Price (excluding VAT) Baht	
					Unit Price	Amount	Unit Price	Amount
D2-1	Reference : Specification No.605 Aluminum alloy quadruple bundle connector with six holes NEMA pad, complete with straight compression terminals for 4x1272 MCM ACSR, bolts, nuts and washers ,Lorunser Cat. No.3-19019/1E or equal (Legend No.28.93A). In addition, aluminum alloy streamlined cap for shielding hardware when bolting terminal to flat pad shall be provided.	55		THB	12,727.00	699,985.00		
D2-2	Aluminum alloy quadruple bundle connector with six holes NEMA pad, complete with clamp for 4x1272 MCM ACSR (through conductor), bolts, nuts and washers ,Lorunser Cat. No.3-19019/2E or equal (Legend No.28.96A)	40		THB	18,637.00	745,480.00		
D2-3	Aluminum alloy quadruple bundle connector for stud terminal, complete with terminal for 4x1272 MCM ACSR, bolts, nuts and washers ,Lorunser Cat. No.3-19019/3 or equal (Legend No.28.99A)	30		THB	19,857.00	595,710.00		

นายสมชัย เจริญศรีเกษม
ผู้อำนวยการฝ่ายวิศวกรรมระบบส่ง
05 Aug 2026

DRAFT

MEDIUM COST FOR BID NO. IETS-LPLC-TIEC-NPUP-MC1-01

Schedule D2 : 500 kV Bus Fitting

SUPPLY OF MISCELLANEOUS EQUIPMENTSUPPLY OF MISCELLANEOUS EQUIPMENT
TRANSMISSION SYSTEM DEVELOPMENT IN THE AREA OF NAN PHRAE AND UTTARADIT PROVINCES FOR POWER PURCHASE FROM LAO PDR PROJECTS

Item No.	Description	Qty.	Unit	Currency	**Supply of Equipment** Foreign Supply CFR Thai Port		**Supply of Equipment** Local Supply Ex-works Price (excluding VAT) Baht	
					Unit Price	Amount	Unit Price	Amount
D2-4	Spacer connector for 2x1272 MCM ACSR, distance between conductor center 200 mm. ,Lorunser Cat. No.1QA102-040 or equal (Legend No.47.15A)	15		THB	657.00	9,855.00		
D2-5	Spacer connector for 4x1272 MCM ACSR (Square), distance between conductor center 200 mm. ,RIBE Cat. No.Q4K-203 or equal (Legend No.47.22A)	110		THB	1,577.00	173,470.00		
D2-6	Aluminum alloy portable earth connector for 4x 1272 MCM ACSR (EHV) ,Lorunser Cat. No.1HG407-041 or equal (Legend No.49.56A)	15		THB	7,222.00	108,330.00		
Total Price for Schedule D2				**THB**		**2,332,830.00**	**Baht**	

นายสมชัย เจริญศรีเกษม
ผู้อำนวยการฝ่ายวิศวกรรมระบบส่ง
05 Aug 2026

DRAFT

MEDIUM COST FOR BID NO. IETS-LPLC-TIEC-NPUP-MC1-01

Schedule D3 : 230 kV and below Bus Fitting

SUPPLY OF MISCELLANEOUS EQUIPMENTSUPPLY OF MISCELLANEOUS EQUIPMENT
TRANSMISSION SYSTEM DEVELOPMENT IN THE AREA OF NAN PHRAE AND UTTARADIT PROVINCES FOR POWER PURCHASE FROM LAO PDR PROJECTS

Item No.	Description	Qty.	Unit	Currency	Supply of Equipment Foreign Supply CFR Thai Port		Supply of Equipment Local Supply Ex-works Price (excluding VAT) Baht	
					Unit Price	Amount	Unit Price	Amount
D3-1	Reference : Specification No.605 Terminal connector for 4x1272 MCM ACSR, Six holes NEMA PAD ,Lorunser Cat. No.3-19019/1E or equal (Legend No.28.93). In addition, aluminum alloy streamlined cap for shielding hardware when bolting terminal to flat pad shall be provided.	30		THB	9,328.00	279,840.00		
D3-2	Stainless steel hexagon head bolts, 0.5-13 inch, 3.5 inch long fully threaded and manufactures of series 18-8 material, coarse thread series class 2A tolerance ,Burndy Cat. No.50x350 HSSB or equal (Legend No.90.52)	795		THB	46.00	36,570.00		
D3-3	Stainless steel hexagon nuts manufactures of series 18-8 material finish type, coarse thread series class 2B fit for 0.5-13 inch bolts size ,Burndy Cat. No.50 HSSN or equal (Legend No.90.61)	795		THB	10.00	7,950.00		
D3-4	Stainless steel flat washers manufactures of 18-8 material and of medium design 1.125 inch O.D., 0.594 inch I.D., and 0.125 inch thickness ,Burndy Cat. No.50 FWSS or equal (Legend No.90.66)	1585		THB	14.00	22,190.00		

นายสมชัย เจริญศรีเกษม
ผู้อำนวยการฝ่ายวิศวกรรมระบบส่ง
05 Aug 2026

DRAFT

MEDIUM COST FOR BID NO. IETS-LPLC-TIEC-NPUP-MC1-01

Schedule D3 : 230 kV and below Bus Fitting

SUPPLY OF MISCELLANEOUS EQUIPMENTSUPPLY OF MISCELLANEOUS EQUIPMENT
TRANSMISSION SYSTEM DEVELOPMENT IN THE AREA OF NAN PHRAE AND UTTARADIT PROVINCES FOR POWER PURCHASE FROM LAO PDR PROJECTS

Item No.	Description	Qty.	Unit	Currency	Supply of Equipment Foreign Supply CFR Thai Port		Supply of Equipment Local Supply Ex-works Price (excluding VAT) Baht	
					Unit Price	Amount	Unit Price	Amount
D3-5	Stainless steel belleville washers manufactures of alloy 301, 302 or 18-8 materials, 1.06 inch O.D., 0.530 inch I.D., 0.095 inch thickness ,Burndy Cat. No.50x106 BWSS or equal (Legend No.90.76)	795		THB	27.00	21,465.00		
D3-6	Aluminum joint compound in 8-oz bottles ,Burndy Cat. No.P8A or equal (Legend No.90.91)	80		THB	655.00	52,400.00		
Total Price for Schedule D3				**THB**		**420,415.00**	**Baht**	

นายสมชัย เจริญศรีเกษม
ผู้อำนวยการฝ่ายวิศวกรรมระบบส่ง
05 Aug 2026

DRAFT

นายสมชัย เจริญศรีเกษม
ผู้อำนวยการฝ่ายวิศวกรรมระบบส่ง
05 Aug 2026

MEDIUM COST FOR BID NO. IETS-LPLC-TIEC-NPUP-MC1-01

Schedule D4 : Grounding Material

SUPPLY OF MISCELLANEOUS EQUIPMENTSUPPLY OF MISCELLANEOUS EQUIPMENT
TRANSMISSION SYSTEM DEVELOPMENT IN THE AREA OF NAN PHRAE AND UTTARADIT PROVINCES FOR POWER PURCHASE FROM LAO PDR PROJECTS

Item No.	Description	Qty.	Unit	Currency	Supply of Equipment		Supply of Equipment	
					Foreign Supply		Local Supply	
					CFR Thai Port		Ex-works Price (excluding VAT) Baht	
					Unit Price	Amount	Unit Price	Amount
D4-1	Reference : Specification No.603 Ground rod size 5/8 inch diameter x 10 feet	22		THB	558.00	12,276.00		
D4-2	Exothermic welding mold for connecting copper weld ground rod size 5/8 inch diameter to copper ground wire no. 4/0 AWG ,Kumwell Cat. No.CR2-C-5/84/0 or equal (Legend No.60.02)	1			XXXXX	XXXXX	2,900.00	2,900.00
D4-3	Exothermic welding mold for connecting horizontal cable of no. 4/0 AWG run to horizontal through cable of no. 4/0 AWG copper ground wire tap ,Kumwell Cat. No.CC2-C-4/04/0 or equal (Legend No.60.03)	14			XXXXX	XXXXX	2,389.00	33,446.00
D4-4	Exothermic welding mold for connecting angular cable drop of no. 4/0 AWG copper ground wire to vertical steel flat surface ,Kumwell Cat. No.CS3-Y-4/0 or equal (Legend No.60.04)	2			XXXXX	XXXXX	2,389.00	4,778.00
D4-5	Exothermic welding mold for connecting angular cable drop of no. 4/0 AWG copper ground wire to vertical steel pipe 2-4 inch diameter ,Kumwell Cat. No.CP1-X-4/0 or equal (Legend No.60.05)	2			XXXXX	XXXXX	2,389.00	4,778.00

DRAFT

นายสมชัย เจริญศรีเกษม
ผู้อำนวยการฝ่ายวิศวกรรมระบบส่ง
05 Aug 2026

MEDIUM COST FOR BID NO. IETS-LPLC-TIEC-NPUP-MC1-01

Schedule D4 : Grounding Material

SUPPLY OF MISCELLANEOUS EQUIPMENTSUPPLY OF MISCELLANEOUS EQUIPMENT
TRANSMISSION SYSTEM DEVELOPMENT IN THE AREA OF NAN PHRAE AND UTTARADIT PROVINCES FOR POWER PURCHASE FROM LAO PDR PROJECTS

Item No.	Description	Qty.	Unit	Currency	Supply of Equipment		Supply of Equipment	
					Foreign Supply		Local Supply	
					CFR Thai Port		Ex-works Price (excluding VAT) Baht	
					Unit Price	Amount	Unit Price	Amount
D4-6	Exothermic welding mold for connecting horizontal to horizontal cable cross of no. 4/0 AWG copper ground wire tap cable, cut cable in same plane ,Kumwell Cat. No.CC4-C-4/04/0 or equal (Legend No.60.06)	1			XXXXX	XXXXX	2,900.00	2,900.00
D4-7	Exothermic welding mold for connecting cable of no. 4/0 AWG copper ground wire vertical through to steel flat surface ,Kumwell Cat. No.CS4-Y-4/0 or equal (Legend No.60.07)	29			XXXXX	XXXXX	2,627.00	76,183.00
D4-8	Changeable handle clamp ,Kumwell Cat. No.HCC00-XY or equal (Legend No.60.09)	5			XXXXX	XXXXX	3,902.00	19,510.00
D4-9	Welding powder cartridges for mold ,Kumwell Cat. No.CR2-C-5/84/0 or equal (Legend No.60.10)	22			XXXXX	XXXXX	163.00	3,586.00
D4-10	Welding powder cartridges for mold ,Kumwell Cat. No.CC2-C-4/04/0 or equal (Legend No.60.11)	402			XXXXX	XXXXX	210.00	84,420.00
D4-11	Welding powder cartridges for mold ,Kumwell Cat. No.CS3-Y-4/0 or equal (Legend No.60.12)	43			XXXXX	XXXXX	166.00	7,138.00

DRAFT

MEDIUM COST FOR BID NO. IETS-LPLC-TIEC-NPUP-MC1-01

Schedule D4 : Grounding Material

SUPPLY OF MISCELLANEOUS EQUIPMENTSUPPLY OF MISCELLANEOUS EQUIPMENT
TRANSMISSION SYSTEM DEVELOPMENT IN THE AREA OF NAN PHRAE AND UTTARADIT PROVINCES FOR POWER PURCHASE FROM LAO PDR PROJECTS

Item No.	Description	Qty.	Unit	Currency	**Supply of Equipment** Foreign Supply CFR Thai Port		**Supply of Equipment** Local Supply Ex-works Price (excluding VAT) Baht	
					Unit Price	Amount	Unit Price	Amount
D4-12	Welding powder cartridges for mold ,Kumwell Cat. No.CP1-X-4/0 or equal (Legend No.60.13)	36			XXXXX	XXXXX	166.00	5,976.00
D4-13	Welding powder cartridges for mold ,Kumwell Cat. No.CC4-C-4/04/0 or equal (Legend No.60.14)	17			XXXXX	XXXXX	232.00	3,944.00
D4-14	Welding powder cartridges for mold ,Kumwell Cat. No.CS4-Y-4/0 or equal (Legend No.60.15)	845			XXXXX	XXXXX	277.00	234,065.00
D4-15	Tool kit complete set ,Kumwell Cat. No.KTA000 or equal (Legend No.60.17)	3			XXXXX	XXXXX	4,900.00	14,700.00
D4-16	Flint igniter ,Kumwell Cat. No.KTA014U or equal (Legend No.60.18)	52			XXXXX	XXXXX	296.00	15,392.00

นายสมชัย เจริญศรีเกษม
ผู้อำนวยการฝ่ายวิศวกรรมระบบส่ง
05 Aug 2026

DRAFT

MEDIUM COST FOR BID NO. IETS-LPLC-TIEC-NPUP-MC1-01

Schedule D4 : Grounding Material

SUPPLY OF MISCELLANEOUS EQUIPMENTSUPPLY OF MISCELLANEOUS EQUIPMENT
TRANSMISSION SYSTEM DEVELOPMENT IN THE AREA OF NAN PHRAE AND UTTARADIT PROVINCES FOR POWER PURCHASE FROM LAO PDR PROJECTS

Item No.	Description	Qty.	Unit	Currency	Supply of Equipment Foreign Supply CFR Thai Port		Supply of Equipment Local Supply Ex-works Price (excluding VAT) Baht	
					Unit Price	Amount	Unit Price	Amount
D4-17	Single terminal lug one hole for 4/0 AWG copper ground wire ,Kumwell Cat. No.KGXTEL-4/0 or equal (Legend No.60.19)	43		THB	177.00	7,611.00		
D4-18	Cable clamp for 4/0 AWG copper ground wire run to cable trench wall (with expansion bolt) ,Kumwell Cat. No.KGRC-A or equal (Legend No.60.22)	1078		THB	106.00	114,268.00		
D4-19	Ground safety mat no. 6 AWG solid copper wire size 1.2 x 1.2 m. Spacing 0.15 x 0.15 m. ,Kumwell Cat. No.CC14-C-#6#6 or equal (Legend No.60.23)	14		THB	13,028.00	182,392.00		
Total Price for Schedule D4				**THB**		**316,547.00**	**Baht**	**513,716.00**

นายสมชัย เจริญศรีเกษม
ผู้อำนวยการฝ่ายวิศวกรรมระบบส่ง
05 Aug 2026

DRAFT

MEDIUM COST FOR BID NO. IETS-LPLC-TIEC-NPUP-MC1-01

Schedule D5 : Rigid Steel Conduit

SUPPLY OF MISCELLANEOUS EQUIPMENTSUPPLY OF MISCELLANEOUS EQUIPMENT TRANSMISSION SYSTEM DEVELOPMENT IN THE AREA OF NAN PHRAE AND UTTARADIT PROVINCES FOR POWER PURCHASE FROM LAO PDR PROJECTS

Item No.	Description	Qty.	Unit	**Supply of Equipment**	
				Local Supply	
				Ex-works Price (excluding VAT) Baht	
				Unit Price	Amount
D5-1	Reference : Specification No. 522 Rigid steel conduit 2.0 inch dia., 3.05 m long	85		1,786.40	151,844.00
Total Price for Schedule D5				**Baht**	**151,844.00**

DRAFT

นายสมชัย เจริญศรีเกษม
ผู้อำนวยการฝ่ายวิศวกรรมระบบส่ง
05 Aug 2026

MEDIUM COST FOR BID NO. IETS-LPLC-TIEC-NPUP-MC1-01

Schedule D6 : Conduit Fitting

SUPPLY OF MISCELLANEOUS EQUIPMENTSUPPLY OF MISCELLANEOUS EQUIPMENT
TRANSMISSION SYSTEM DEVELOPMENT IN THE AREA OF NAN PHRAE AND UTTARADIT PROVINCES FOR POWER PURCHASE FROM LAO PDR PROJECTS

Item No.	Description	Qty.	Unit	Currency	Supply of Equipment Foreign Supply CFR Thai Port		Supply of Equipment Local Supply Ex-works Price (excluding VAT) Baht	
					Unit Price	Amount	Unit Price	Amount
	Reference : Specification No. 522							
D6-1	Bushing for rigid steel conduit 2.0 inch dia.	165		THB	193.60	31,944.00		
D6-2	Lock nut for rigid steel conduit 2.0 inch dia.	175		THB	71.50	12,512.50		
D6-3	Coupling for rigid steel conduit 2.0 inch dia.	80		THB	161.70	12,936.00		
D6-4	Flexible rain tight conduit 2.0 inch dia., 15 meter/package	20		THB	469.70	9,394.00		
D6-5	Connector for flexible rain tight conduit 2.0 inch dia.	160		THB	312.40	49,984.00		
Total Price for Schedule D6				**THB**		**116,770.50**	**Baht**	

นายสมชัย เจริญศรีเกษม
ผู้อำนวยการฝ่ายวิศวกรรมระบบส่ง
05 Aug 2026

DRAFT

Contract No. **Invitation to Bid No. IETS-LPLC-TIEC-NPUP-MC1-01**

ELECTRICITY GENERATING AUTHORITY OF THAILAND

BIDDING DOCUMENTS

SUPPLY OF MISCELLANEOUS EQUIPMENT

WORK PLAN TO IMPROVE THE ELECTRICITY SUPPLY MODEL FOR HIGH VOLTAGE SUBSTATION TO ENHANCE THE TRANSMISSION SYSTEM STABILITY AND RELIABILITY

LONG-TERM INVESTMENT PLAN TO ACCOMMODATE LARGE POWER CONSUMER

TRANSMISSION SYSTEM IMPROVEMENT PROJECT IN NORTHEASTERN, LOWER NORTHERN, CENTRAL REGIONS AND BANGKOK AREA TO ENHANCE SYSTEM SECURITY

TRANSMISSION SYSTEM DEVELOPMENT IN THE AREA OF NAN PHRAE AND UTTARADIT PROVINCES FOR POWER PURCHASE FROM LAO PDR PROJECTS

EGAT'S FUND

BIDDER :_____

(2026)

DRAFT

INVITATION TO BID NO. IETS-LPLC-TIEC-NPUP-MC1-01

SUPPLY OF MISCELLANEOUS EQUIPMENT

WORK PLAN TO IMPROVE THE ELECTRICITY SUPPLY MODEL FOR HIGH VOLTAGE SUBSTATION TO ENHANCE THE TRANSMISSION SYSTEM STABILITY AND RELIABILITY

LONG-TERM INVESTMENT PLAN TO ACCOMMODATE LARGE POWER CONSUMER

TRANSMISSION SYSTEM IMPROVEMENT PROJECT IN NORTHEASTERN, LOWER NORTHERN, CENTRAL REGIONS AND BANGKOK AREA TO ENHANCE SYSTEM SECURITY

TRANSMISSION SYSTEM DEVELOPMENT IN THE AREA OF NAN PHRAE AND UTTARADIT PROVINCES FOR POWER PURCHASE FROM LAO PDR PROJECTS

EGAT'S FUND

CONTENTS

CONFIRMATION FORM

DISCOUNT FORM

ADDITIONAL REGULATION

IMPORTANT INFORMATION

DATA SHEET

SECTION A INVITATION TO BID

SECTION B INSTRUCTIONS TO BIDDERS

SECTION C PROPOSAL

SECTION D CONTRACT

SECTION E GENERAL CONDITIONS

SECTION F SPECIAL CONDITIONS

SECTION G RATINGS AND FEATURES (None)

SECTION H BILL OF MATERIALS (None)

SECTION I SPECIFICATIONS

SECTION J DRAWINGS

DRAFT

CONTENTS

Article No.	Description	Page
	Confirmation Form	-
	Discount Form	-
	Additional Regulation	1-11
	Important Information	i
	Data Sheet	i
	SECTION A : INVITATION TO BID	
A-1	Invitation	A1
A-2	Eligibility of Bidders: General Requirements	A1
A-3	Eligibility of Bidders: Technical Requirements	A3
A-4	Joint Venture or Consortium	A6
A-5	Preparation and Delivery of Bids	A6
A-6	Availability of Bidding Documents	A7
	SECTION B : INSTRUCTIONS TO BIDDERS	
	Overview of the Procurement Process	B1
B-1	Preparation of Bids	B2
B-2	Bid Prices	B3
B-3	Bid Security	B5
B-4	Validity of Bids	B6
B-5	Delivery of Bids	B6
B-6	Withdrawal of Bids	B6
B-7	Interpretation of Bidding Documents before Bid Opening	B6
B-8	Information to be Submitted with Bid	B7

DRAFT

Article No.	Description	Page
B-9	Deviations from Specifications	B9
B-10	Rejection of Bids	B9
B-11	Delivery Time	B9
B-12	Evaluation and Comparison of Bids	B10
B-13	Acceptance of Bids	B11
B-14	Appeal	B11
B-15	Award of Contract	B12
B-16	Bidder's Responsibility	B12
B-17	Supplemental Notices	B12
B-18	Cost of Bidding	B13
B-19	Cancellation of Bid	B13
	Specimen of Bid Security	B14

SECTION C : PROPOSAL

C-1	Price Schedule	C1
C-2	Penalty for Equipment Not Meeting Guaranteed Characteristics	C2
C-3	Guaranteed Delivery Time	C2
C-4	Drawing and Document Submission Schedule	C2
C-5	Estimate of Deliveries	C2
C-6	Bid Security	C3
C-7	Supplemental Notices	C3
	Part 1 : Price Proposal	Part 1-C1
	Part 2 : Proposal Data	Part 2-C1
	Part 3 : Delivery Schedule and Distribution List	Part 3-C1

DRAFT

Article No.	Description	Page
	SECTION D : CONTRACT	
D-1	Contract Documents	D1
D-2	Acceptance of Proposal	D2
D-3	Agreement	D2
D-4	Obligation of Contractor	D2
D-5	Obligation of EGAT	D2
D-6	Mutual Obligations	D3
D-7	Deposit of Performance Security	D3
D-8	Assignment	D3
D-9	Notices	D3
D-10	Integration	D4
D-11	Counterpart	D4
	SECTION E : GENERAL CONDITIONS	
E-1	Definitions	E1
E-2	Intent of Contract Documents	E2
E-3	Applicable Law and Legal Jurisdiction	E3
E-4	Statutory Requirements	E3
E-5	Patents and Copyrights	E3
E-6	Subcontracts	E4
E-7	Export Charges	E4
E-8	Import Duty and Taxes	E4
E-9	Value Added Tax	E5
E-10	Income and Other Taxes	E6

DRAFT

Article No.	Description	Page
E-11	Fees and Duties	E7
E-12	Performance Security	E8
E-13	Inspection and Tests	E9
E-14	Preparation for Shipment and/or Delivery	E11
E-15	Clearance and Weight Limitations	E13
E-16	Shipment	E13
E-17	Documents Required for Each Shipment	E15
E-18	Force Majeure	E18
E-19	Transportation Insurance	E19
E-20	Transfer of Title	E19
E-21	Changes and Extra or Omitted Work	E19
E-22	Termination and Suspension of Contract	E20
E-23	Default and Termination	E20
E-24	Indemnification by the Contractor	E21
E-25	Limitation of Liability	E22
E-26	Consequential Damages	E22
E-27	Vesting of Contract in Receiver	E22
E-28	Extension of Time	E23
E-29	Failure to Meet Requirements	E23
E-30	Operation or Use of Unsatisfactory Equipment	E26
E-31	Dispute Resolution	E26
E-32	Language and Numbers	E26
	Specimen of Guarantee	E27
	Instructions for Packaging	E28

DRAFT

Article No.	Description	Page
	SECTION F : SPECIAL CONDITIONS	
F-1	Scope of Work	F1
F-2	Responsibility of Contractor	F1
F-3	Cooperation with Other Contractors	F1
F-4	Supervision of Installation	F2
F-5	Acceptance Tests	F3
F-6	Failure to Meet Performance Guarantees	F3
F-7	Acceptance Certificate	F3
F-8	Payment	F4
F-9	Liquidated Damages for Late Delivery of Equipment	F8
F-10	Maintenance Guarantee	F9
F-11	Drawings and Documents to be Furnished by Contractor	F11
F-12	Maintenance Security	F14
	Specimen of Maintenance Guarantee	F16
	Drawings and Documents to be Furnished by the Contractor (For Control and Protection Equipment)	F17
	Drawings and Documents to be Furnished by the Contractor (For All Equipment except Control and Protection Equipment)	F18
	SECTION G : RATINGS AND FEATURES (None)	
-	-	-
	SECTION H : BILL OF MATERIALS (None)	
-	-	-

DRAFT

Article No.	Description	Page
	SECTION I : SPECIFICATIONS	
I-1	Specifications	I1
	SECTION J : DRAWINGS	
J-1	Drawings	J1

DRAFT

CONFIRMATION FORM

(INDIVIDUAL COMPANY / JOINT VENTURE)

INVITATION TO BID NO. IETS-LPLC-TIEC-NPUP-MC1-01

SUPPLY OF MISCELLANEOUS EQUIPMENT

WORK PLAN TO IMPROVE THE ELECTRICITY SUPPLY MODEL FOR HIGH VOLTAGE SUBSTATION TO ENHANCE THE TRANSMISSION SYSTEM STABILITY AND RELIABILITY

LONG-TERM INVESTMENT PLAN TO ACCOMMODATE LARGE POWER CONSUMER

TRANSMISSION SYSTEM IMPROVEMENT PROJECT IN NORTHEASTERN, LOWER NORTHERN, CENTRAL REGIONS AND BANGKOK AREA TO ENHANCE SYSTEM SECURITY

TRANSMISSION SYSTEM DEVELOPMENT IN THE AREA OF NAN PHRAE AND UTTARADIT PROVINCES FOR POWER PURCHASE FROM LAO PDR PROJECTS

By signing in the space provided below, we confirm that:-

- According to "Eligibility of Bidders" and in addition to the Documentary List attached to the bidding documents, we are not a Jointly Interested Bidder with the other bidders as from the date of EGAT's issuance of the subject Invitation and are not a person who undertakes any actions as an "Obstruction of Fair Price Competition".
- According to Article B-8. Information to be Submitted with Bid, we confirm
  - ☐ Registration with the Revenue Department as a value added tax registrant in Thailand as per certificate of value added tax registration (ภพ.20) attached.
  - ☐ Non-Registration as a value added tax registrant in Thailand, but will register later.
  - ☐ Non-Registration as a value added tax registrant in Thailand and will not register.

Confirmed :

……..….…….

By : ……..……..

Title : ……..…….

Date : ……..……...

DRAFT

CONFIRMATION FORM

(CONSORTIUM)

INVITATION TO BID NO. IETS-LPLC-TIEC-NPUP-MC1-01

SUPPLY OF MISCELLANEOUS EQUIPMENT

WORK PLAN TO IMPROVE THE ELECTRICITY SUPPLY MODEL FOR HIGH VOLTAGE SUBSTATION TO ENHANCE THE TRANSMISSION SYSTEM STABILITY AND RELIABILITY

LONG-TERM INVESTMENT PLAN TO ACCOMMODATE LARGE POWER CONSUMER

TRANSMISSION SYSTEM IMPROVEMENT PROJECT IN NORTHEASTERN, LOWER NORTHERN, CENTRAL REGIONS AND BANGKOK AREA TO ENHANCE SYSTEM SECURITY

TRANSMISSION SYSTEM DEVELOPMENT IN THE AREA OF NAN PHRAE AND UTTARADIT PROVINCES FOR POWER PURCHASE FROM LAO PDR PROJECTS

Member No. … of the consortium:
By signing in the space provided below, we confirm that:-

- According to "Eligibility of Bidders" and in addition to the Documentary List attached to the bidding documents, we are not a Jointly Interested Bidder with the other bidders as from the date of EGAT's issuance of the subject Invitation and are not a person who undertakes any actions as an "Obstruction of Fair Price Competition".
- According to Article B-8. Information to be Submitted with Bid, we confirm
  - ☐ Registration with the Revenue Department as a value added tax registrant in Thailand as per certificate of value added tax registration (ภพ.20) attached.
  - ☐ Non-Registration as a value added tax registrant in Thailand, but will register later.
  - ☐ Non-Registration as a value added tax registrant in Thailand and will not register.

Confirmed :

……..….…….

By : ……..……..

Title : ……..…….

Date : ……..……...

DRAFT

<u>DISCOUNT FORM</u>
(Excluding VAT)

INVITATION TO BID NO. IETS-LPLC-TIEC-NPUP-MC1-01

SUPPLY OF MISCELLANEOUS EQUIPMENT

WORK PLAN TO IMPROVE THE ELECTRICITY SUPPLY MODEL FOR HIGH VOLTAGE SUBSTATION TO ENHANCE THE TRANSMISSION SYSTEM STABILITY AND RELIABILITY

LONG-TERM INVESTMENT PLAN TO ACCOMMODATE LARGE POWER CONSUMER

TRANSMISSION SYSTEM IMPROVEMENT PROJECT IN NORTHEASTERN, LOWER NORTHERN, CENTRAL REGIONS AND BANGKOK AREA TO ENHANCE SYSTEM SECURITY

TRANSMISSION SYSTEM DEVELOPMENT IN THE AREA OF NAN PHRAE AND UTTARADIT PROVINCES FOR POWER PURCHASE FROM LAO PDR PROJECTS

Bidder : _____

By signing in the space provided below, we confirm that:-

- ☐ we offer no discount.
- ☐ we offer discount(s) as follows:

Details of discount	Currency	Amount

<u>Remarks</u> :

- ***The Bidder shall apply discount(s) on any item(s), schedule(s), or the total price, excluding Value Added Tax (VAT).***
- The above discount(s) shall not be subject to any conditions. Discount with conditions shall not be considered.
- This Discount Form, together with Bidder's Summary of Bid Price, will be publicly presented on a screen to all Bidders in the bid opening room at the time of bid opening.

Confirmed by authorized person(s):

……..….…….

By : ……..……..

Title : ……..…….

Date : ……..……...

DRAFT

Additional Regulation

This Regulation shall apply to the Enquiry, Bid for Supply, Lease, Hire of Work, or Hire of Consultant by Way of Selection.

1. Attachments

   1.1 Definitions
   1.1.1 Jointly Interested Bidder
   1.1.2 Obstruction of Fair Price Competition

   1.2 Documentary List

2. Bidder's Qualifications

   2.1 The Bidder shall professionally be in the business of providing materials or services or leasing or consultancy services, as the case may be, and shall not be named in the list of work abandoners published by the Permanent Secretary, Ministry of Finance, and/or in the debarment list and/or the list of work abandoners declared by EGAT according to Article 5 of this Regulation.

   2.2 The Bidder shall not be a Jointly Interested Bidder with other bidders as from the date of EGAT's issuance of the Invitation for Bid/Enquiry or the Invitation Letter/ Terms of Reference for the consultancy services, as the case may be, or shall not be a person who undertakes any action as an "Obstruction of Fair Price Competition" described in Article 1.1 – Definitions.

   2.3 The Bidder shall not have EGAT's personnel involve in his business as shareholder having voting right that can control his business, director, manager, officer, employee, agent or consultant except for the ones who are officially ordered by EGAT to act or participate therein.

3. Information to be Submitted with Bid

   The Bidder shall submit with his bid the documents according to Article 1.2 - Documentary List, including but not limited to, the following documents :-

   3.1 Where the Bidder is a juristic person :

   (a) ordinary partnership or limited partnership

   a certified copy of affidavit of incorporation, name list of managing partners, list of persons entrusted with controlling power (if any), as well as a certified copy of registration for value added tax (if any).

   (b) limited company or public limited company

   a certified copy of affidavit of incorporation, memorandum of association, name list of managing directors, list of persons entrusted with controlling power (if any) and name list of major shareholders, as well as a certified copy of registration for value added tax (if any).

DRAFT

Such certified copy of affidavit of incorporation with the validity of not more than six (6) months from the date of certification to the opening date of Bid/Enquiry or the date of Invitation Letter/Terms of Reference in case of consultancy services, as the case may be, shall certify at least the following information :

(i) Type of a juristic person : an ordinary partnership, a limited partnership, a limited company, a public limited company,

(ii) Name according to (i),

(iii) Number and names of managing partners or managing directors,

(iv) Number and names of managing partners or managing directors authorized to act on behalf of the company,

(v) Amount of shareholders' equity or registered capital,

(vi) Authority of managing partner in case of partnership,

(vii) Location of head office,

(viii) Registration purposes,

(ix) Scope of work indicated in business permit license of a foreign juristic person who registers in Thailand,

(x) Other documents e.g. changes or additions to the above documents, branches (if any).

3.2 Where the Bidder is a natural person or a group of persons other than a juristic person :

a certified copy of :
- identity card ***or passport (if non-Thai national)***
- partnership agreement or contract (if any)
- partners' identity cards ***or passport (if non-Thai national)***
- registration required by Ministry of Commerce of Thailand
- registration for value added tax (if any)

3.3 Where the Bidder is a joint venture / consortium :

a certified copy of :
- association agreement
- identity card or passport (if non Thai national)
  (The participant in the joint venture or consortium is <u>not</u> a juristic person.)
- all documents specified in *Item 3.1* of Additional Regulation
  (The participant in the joint venture or consortium is a juristic person.)

3.4 Other documentary evidence as required per *Item 3, 6 or 8* of <u>Documentary List</u> (if any).

DRAFT

4. Preliminary Examination

4.1 EGAT shall examine the qualification of all bidders to determine whether any bidder is a Jointly Interested Bidder as from the date of EGAT's issuance of the Invitation for Bid/Enquiry or the Invitation Letter/Terms of Reference for the consultancy services, as the case may be, and/or undertakes any action as an "Obstruction of Fair Price Competition" before or during the bid opening. If there is evidence showing that any bidder is a Jointly Interested Bidder or undertakes any action as an "Obstruction of Fair Price Competition", EGAT shall delete his name from the list of bidders and inform such bidder by written notice hereof.

4.2 The Bidder whose name is deleted according to Article 4.1, may, within fifteen (15) calendar days from the date of receipt of EGAT's written notice, appeal to EGAT, explaining reasons together with relevant documents for EGAT's reconsideration.

In case EGAT agrees with the objection of the appellant but considers that the cancellation of enquiry/bidding will be beneficial to EGAT, EGAT may, at its sole discretion, cancel such bid. In the event that the Bidder who undertakes any action as an "Obstruction of Fair Price Competition" does not appeal or, after his appeal, EGAT does not agree with his objection, such Bidder shall be regarded as a work abandoner.

EGAT's decision shall be notified to the appellant in writing and such decision shall be final and conclusive.

5. Reservation of the Right for Proposal and Others

In case any juristic person is regarded as a work abandoner by EGAT and such abandonment is caused by the manager, the managing partner, the managing director, the executive or the person authorized to manage the business of that juristic person, EGAT shall also include his name as a work abandoner.

In case any juristic person is regarded as a work abandoner by EGAT, such decision shall also be applied to other juristic persons of the same business where its manager, managing partner, managing director, executive, or person authorized to manage the business is the same person who is the manager, managing partner, managing director, executive, or person authorized to manage the business of the juristic person who is regarded as a work abandoner by EGAT as aforesaid.

In case any natural person is regarded as a work abandoner by EGAT, such decision shall also be applied to other juristic persons who submit the proposal and have such natural person as the manager, managing partner, managing director, executive or person authorized to manage the business of such juristic persons

DRAFT

1.1 Definitions

These definitions shall apply to the Enquiry, Bid for Supply, Lease, Hire or Work, or Hire of Consultant by Way of Selection.

1.1.1 ***"Jointly Interested Bidder"*** means a natural person or juristic person who submits bid to EGAT for the supply of goods, lease, hire of work, or hire of consultant by way of selection, as the case may be, and who has an interest, either directly or indirectly, in the business of another natural person or juristic person whose bid is also submitted to EGAT in this bidding.

The interest, either direct or indirect, in another natural person or juristic person as aforesaid includes the relationship in the following manners :

(1) Management relationship, whereby the manager, the managing partner, the managing director, the executive or the person authorized to manage the business of a natural person or a juristic person has the power, or is able to exercise the power, in managing the business of the other one or more natural persons or juristic persons whose bids are also submitted to EGAT in this bidding.

(2) Capital relationship, whereby a partner in an ordinary partnership or a partner with unlimited liability in a limited partnership or a major shareholder in a limited company or a public limited company is a partner in the other one or more ordinary partnerships or limited partnerships, or is a major shareholder in the other one or more limited companies or public limited companies whose bids are also submitted to EGAT in this bidding.

(3) Cross relationship between (1) and (2), whereby the manager, managing partner, managing director, executive or person authorized to manage the business of a natural person or juristic person is a partner in the other one or more ordinary partnerships or limited partnerships, or is a major shareholder in the other one or more limited companies or public limited companies whose bids are also submitted to EGAT in this bidding, or *vice versa*.

"*Major shareholder*" means a shareholder who holds more than twenty five (25) percent of stake in such an enterprise or at another percentage determined by the Governor as he deems expedient for some types or sizes of enterprises.

Holding of position, being a partner or shareholding as aforesaid by the spouse or minor of the person in (1), (2) or (3) shall be deemed the holding of position, being a partner or shareholding by such person.

If any bidder uses the name of another person as the manager, managing partner, managing director, executive, partner or shareholder, but in which case he himself in fact exercises the power in management or he himself is the real partner or shareholder of the partnership or limited company or public limited company, as the case may be, and the related partnership or limited company or public limited company whose bid is also submitted to EGAT in this bidding, that bidder shall be deemed to have a relationship under (1), (2) or (3), as the case may be.

DRAFT

1.1.2 ***"Obstruction of Fair Price Competition"*** means any act committed by a bidder or bidders causing hindrance or obstruction or impeding the opportunity for fair price competition in the tendering of bid to EGAT, whether done by collusion, or by granting, requesting, or agreeing to grant, demand, accept or agreeing to accept money or property or other benefit or by committing an act of violence or by threatening to commit an act of violence or presenting a false document or doing any act in bad faith, with the objective of acquiring benefit among the other bidders or in order to give benefit to any specific bidder so that such person will be entitled to enter into a contract with EGAT or in order to avoid fair price competition, or in order to take advantage to EGAT which not being usual business practices.

DRAFT

1.2 Documentary List

This documentary list shall apply to the Enquiry, Bid for Supply, Lease, Hire of Work, or Hire of Consultant by Way of Selection.

		No. of page(s)	For EGAT only	
	Thai National Bidder			
[ ]	1. Where the Bidder is a natural person or a group of persons other than a juristic person			
	( ) (a) Natural Person		Yes	No
	- Certified copy of identity card	……	☐	☐
	( ) (b) Group of persons			
	- Certified copy of partnership agreement or contract (if any)	……	☐	☐
	- Certified copy of identity card(s) of partners or related documents according to Item 2 (a) and (b) of each participant of the group	……	☐	☐
[ ]	2. Where the Bidder is a juristic person			
	( ) (a) Ordinary partnership or limited partnership			
	- Certified copy of affidavit of incorporation	……	☐	☐
	- Name list of managing partners and list of persons entrusted with controlling power (if any) (Please fill in the form on page 10.)	……	☐	☐
	( ) (b) Limited company or public limited company			
	- Certified copy of affidavit of incorporation	……	☐	☐
	- Memorandum of Association	……	☐	☐
	- Name list of managing directors and list of persons entrusted with controlling power (if any) (Please fill in the form on page 10.)	……	☐	☐
	- Name list of major shareholders (Please fill in the form on page 11.)	……	☐	☐
[ ]	3. Other documents (if any)			
	( ) Certified copy of any other registration required by Ministry of Commerce of Thailand	……	☐	☐
	( ) Certified copy of registration for value added tax	……	☐	☐
	( ) …….…….	……	☐	☐
	( ) ……..	……	☐	☐

DRAFT

	No. of page(s)	For EGAT only	

Non-Thai National Bidder

			Yes	No
[ ]	4. Where the Bidder is a natural person or a group of persons other than a juristic person			
	( ) (a) Natural Person			
	- Certified copy of passport	……	☐	☐
	( ) (b) Group of persons			
	- Certified copy of partnership agreement or contract (if any)	……	☐	☐
	- Certified copy of passport of partners or related documents according to Item 5 of each participant of the group	……	☐	☐
[ ]	5. Where the Bidder is a juristic person			
	- Certified copy of affidavit of incorporation	……	☐	☐
	- Name list of managing partners, directors, etc., as the case may be, and list of persons entrusted with controlling power (if any)	……	☐	☐
	- Memorandum of Association (if any) (Please fill in the form on page 10.)	……	☐	☐
	- Name list of major shareholders (if any) (Please fill in the form on page 11.)	……	☐	☐
[ ]	6. Other documents (if any)			
	( ) …….……	……	☐	☐
	( ) ……..	……	☐	☐
	( ) ……..	……	☐	☐
	( ) …….….			
	( ) ……..			

DRAFT

	No. of page(s)	For EGAT only	
Thai and Non-Thai National Bidder			
[ ] 7. Where the Bidder is a joint venture / consortium		Yes	No
- Certified copy of association agreement	……	☐	☐
( ) (a) If participant of a joint venture / consortium is not a juristic person			
(i) Thai national			
- Certified copy of identity card	……	☐	☐
(ii) Non-Thai national			
- Certified copy of passport	……	☐	☐
( ) (b) If participant of a joint venture / consortium is a Thai-national juristic person			
( ) (i) Ordinary partnership or limited partnership			
- Certified copy of affidavit of incorporation	……	☐	☐
- Name list of managing partners, and list of persons entrusted with controlling power (if any) (Please fill in the form on page 10.)	……	☐	☐
( ) (ii) Limited company or public limited company			
- Certified copy of affidavit of incorporation	……	☐	☐
- Memorandum of Association	……	☐	☐
- Name list of managing directors, and list of persons entrusted with controlling power (if any) (Please fill in the form on page 10.)	……	☐	☐
- Name list of major shareholders (Please fill in the form on page 11.)	……	☐	☐

DRAFT

	No. of page(s)	For EGAT only	
		Yes	No
( ) (c) If member of a joint venture / consortium is a Non-Thai national juristic person			
- Certified copy of affidavit of incorporation	……	☐	☐
- Name list of managing partners, directors, etc., as the case may be, and list of persons entrusted with controlling power (if any) (Please fill in the form on page 10.)	……	☐	☐
- Memorandum of Association (if any)	……	☐	☐
- Name list of major shareholders (if any) (Please fill in the form on page 11.)	……	☐	☐
[ ] 8. Other documents (if any)			
( ) Certified copy of any other registration required by Ministry of Commerce of Thailand	……	☐	☐
( ) Certified copy of registration for value added tax in Thailand	……	☐	☐
( ) ……	……	☐	☐
( ) ……	……	☐	☐
( ) ……	……	☐	☐

We hereby confirm that all documents detailed above are true and correct.

Signed

_____

(Name of Bidder)

stamp company seal (if any)

DRAFT

List of Names of Manager / Managing Partner / Managing Director / Executive /
Person Who Is Authorized to Manage the Business
(Relationship in Management)

Bidder shall fill in and submit this form with his bid

Enquiry / Bid No :……..…. Enquiry / Bid Opening Date : ……...

Name of Company / Partnership / Juristic Person :……

No.	Name – Surname	Position	Name – Surname of Spouse	Name – Surname of Minor

We hereby confirm that all documents submitted are true and correct.

Signed _____
(Name of Bidder)

Stamp company seal (if any)

Remarks
1. The unused wordings shall be struck out.
2. Duplicate this page as necessary.

DRAFT

List of Partner in Ordinary Partnership / Partner with Unlimited Liability in Limited Partnership /

Major Shareholder in Limited Company or Public Limited Company

(Relationship in Capital)

Bidder shall fill in and submit this form with his bid

Enquiry / Bid No. : ..... Enquiry / Bid Opening Date : .....

Name of Company / Partnership / Juristic Person : .....

Registered Capital : (currency) ..... Number of Share : ..... Price per Share : (currency) .....

No.	Name - Surname	Position	Number of Share (%) or Amount of Shareholder's Equity	Name – Surname of Spouse	Number of Share (%) or Amount of Shareholder's Equity	Name – Surname of Minor	Number of Share (%) or Amount of Shareholder's Equity

We hereby confirm that all documents submitted are true and correct.

Signed_____

(Name of Bidder)

Stamp company seal (if any)

Remarks

1. The unused wordings shall be struck out.
2. "Major Shareholder" means a shareholder who holds more than twenty-five (25) per cent of stake in an enterprise. The shareholding of spouse or minor of a person shall be regarded as being the shareholding of such person. In case of no major shareholder, please specify "No major shareholder" in the tabulation above.
3. Duplicate this page as necessary.
4. The Bidder shall submit List of Names of Manager/ Managing Partner/ Managing Director/ Executive/ Person Who Is Authorized to Manage the Business (Relationship in Management)/ and List of Partner in Ordinary Partnership/ Partner with Unlimited Liability in Limited Partnership/ Major Shareholder in Limited Company or Public Limited Company (Relationship in Capital) of the Bidder as per page 10-11 of this Additional Regulation.

DRAFT

Important Information

for

Invitation to Bid No. IETS-LPLC-TIEC-NPUP-MC1-01

The purpose of this section is to inform the Bidders to **carefully study** the details of the revised terms and conditions in the bidding documents. The following provisions have been **recently revised** as stated hereunder:

Article A-5. Preparation and Delivery of Bids and Article B-1. Preparation of Bids

Details on how to prepare the proposal have been revised. Bids shall be prepared in accordance with the Instructions to Bidders contained in the Bidding Documents in one (1) original hard copy and one (1) electronic copy contained in USB flash drive.

Article A-5. Preparation and Delivery of Bids

Details of bid opening time and place shall be specified in the Tentative Schedule.

Article A-6. Availability of Bidding Documents

Availability of Bidding Documents has been changed from CD-ROM to electronic files for download via link provided by EGAT.

Channel of Documents Submission

For channel of document submission in the hereunder Articles, facsimile and telex has been replaced with letters submitted electronically or electronic mails (E-mails).

- Article B-1. Preparation of Bids
- Article B-4. Validity of Bids
- Article D-9. Notices
- Article E-17. Documents Required for Each Shipment
- Article F-8. Payment

DRAFT

Article B-2. Bid Prices

For Source of Supply and Service b., Prices for Equipment manufactured outside Thailand (imported Equipment) shall be firm, stated both on FOB Port of Shipment/Vessel and CFR Thai Port basis, and quoted in Thai baht, US dollar, euro, Japanese yen, renminbi (Chinese yuan), or in the Bidder's or Manufacturer's home currency only if his currency trading is prevailed at the time of bidding in any international market other than in Bidder's or Manufacturer's home country.

The following paragraph has also been added :-

"Prices for the following Equipment manufactured outside Thailand which was imported before the bid opening date shall be firm ex-works and quoted in Thai baht, provided that the Bidder shall submit any document(s) evidencing the importation date of such Equipment:

- Power Fuse
- Stationary Battery and Battery Charger
- Insulator for substation
- Cable Termination
- Compression Connector and Miscellaneous Hardware
- Bus Fittings
- Grounding Material
- Substation Miscellaneous"

Article E-14. Preparation for Delivery

The Instructions for Packaging attached at the end of Section E. General Conditions has been revised in item 8. Shunt Capacitor Bank.

Article E-16. Shipment

The Maritime Promotion Bureau has been updated to the Maritime Promotion Division and its contact information has also been updated.

Article F-8. Payment

After each payment is made, the Contractor or beneficiary shall issue and submit the receipt to EGAT as detailed in the paragraph added at the end of this article.

DRAFT

DATA SHEET

DRAFT

DATA SHEET

for

Invitation to Bid No. IETS-LPLC-TIEC-NPUP-MC1-01

This section consists of provisions that are specific to each procurement and supplement the information or requirements included in bidding documents.

Article B-3. Bid Security

Schedules No. A1, A2, B6, B7, C1, D5 and D6

The amount of bid security shall be USD 2,300.- or THB 78,000.-.

Schedule No. A3, B1 and C2

The amount of bid security shall be THB 211,500.-.

Schedule No. A4, B2, C3 and D1

The amount of bid security shall be THB 133,000.-.

Schedule No. B3 and D2

The amount of bid security shall be USD 7,680.- or THB 260,500.-.

Schedule No. A5, B4, C4 and D3

The amount of bid security shall be USD 10,960.- or THB 371,500.-.

Schedule No. A6, B5, C5 and D4

The amount of bid security shall be USD 6,360.- or THB 215,500.-.

Article B-4. Validity of Bids

The validity of the bid shall be for one hundred and fifty (150) Days from the date specified for opening of bid.

Article B-8. Information to be Submitted with Bid

Item m. is not applicable

DRAFT

Article B-12. Evaluation and Comparison of Bids:

The evaluation of bid prices shall be on :

- combination of Schedules A1, A2, B6, B7, C1, D5 and D6
- combination of Schedules A3, B1 and C2
- combination of Schedules A4, B2, C3 and D1
- combination of Schedules B3 and D2
- combination of Schedules A5, B4, C4 and D3
- combination of Schedules A6, B5, C5 and D4.

Article E-29. Failure to Meet Requirements and F-10. Maintenance Guarantee

Maintenance Guarantee Period

- For all Equipment except Shunt Reactor, 200 MVA 230 kV and above Power Transformer and 500 kV System Voltage Equipment

  The Contractor shall guarantee the proper functioning of Equipment for a period of one (1) Year except the following Equipment the guarantee period of which shall be as follows :

Equipment	Period of Guarantee (Year)
- Fault Recording System	2
- Control and Protection System	2

- For Shunt Reactor, 200 MVA 230 kV and above Power Transformer and 500 kV System Voltage Equipment

  The Contractor shall guarantee the proper functioning of Equipment for a period of five (5) Years.

Defective Equipment to be replaced with the whole new set

For GIS, Power Transformer, Power Circuit Breaker, Shunt Reactor, in case EGAT, at its sole discretion, requires the Contractor to replace any defected Equipment, the Contractor shall replace the Equipment with the whole new set as specified in Failure to Meet Requirements in section E and Maintenance Guarantee in section F.

DRAFT

Article F-9. <u>Liquidated Damages for Late Delivery of Equipment</u>

<u>Schedules A1, A2 and C1</u>

The Liquidated Damages shall be at the rate of one-tenth of one (0.10) per cent of the price of each complete item of Equipment not timely delivered for each Day of delay. This sum is payable regardless of the actual loss and/or damages incurred.

<u>Schedules A3 thru A6, B1 thru B7, C2 thru C5 and D1 thru D6</u>

The Liquidated Damages shall be at the rate of one-tenth of one (0.10) per cent of the price of each complete Schedule of Equipment not timely delivered for each Day of delay. This sum is payable regardless of the actual loss and/or damages incurred.

DRAFT

SECTION A

INVITATION TO BID

DRAFT

E L E C T R I C I T Y G E N E R A T I N G A U T H O R I T Y O F T H A I L A N D
Nonthaburi
Thailand

INVITATION TO BID NO. IETS-LPLC-TIEC-NPUP-MC1-01

SUPPLY OF MISCELLANEOUS EQUIPMENT

WORK PLAN TO IMPROVE THE ELECTRICITY SUPPLY MODEL FOR HIGH VOLTAGE SUBSTATION TO ENHANCE THE TRANSMISSION SYSTEM STABILITY AND RELIABILITY

LONG-TERM INVESTMENT PLAN TO ACCOMMODATE LARGE POWER CONSUMER

TRANSMISSION SYSTEM IMPROVEMENT PROJECT IN NORTHEASTERN, LOWER NORTHERN, CENTRAL REGIONS AND BANGKOK AREA TO ENHANCE SYSTEM SECURITY

TRANSMISSION SYSTEM DEVELOPMENT IN THE AREA OF NAN PHRAE AND UTTARADIT PROVINCES FOR POWER PURCHASE FROM LAO PDR PROJECTS

A-1. Invitation

The Electricity Generating Authority of Thailand (EGAT) hereby invites sealed bids for furnishing and delivering of Miscellaneous Equipment under Work Plan to Improve the Electricity Supply Model for High Voltage Substation to Enhance the Transmission System Stability and Reliability, Long-Term Investment Plan to Accommodate Large Power Consumer, Transmission System Improvement Project in Northeastern, Lower Northern, Central Regions and Bangkok Area to Enhance System Security and Transmission System Development in the area of Nan Phrae and Uttaradit provinces for Power Purchase from Lao PDR Projects hereinafter called Equipment in accordance with the terms, conditions and Specifications described in these Bidding Documents.

A-2. Eligibility of Bidders: General Requirements

All Bidders shall meet the following requirements; failure to so comply shall constitute sufficient ground for rejection.

a. The Bidder shall be a partnership, firm or company, either alone or in joint venture or in consortium.

b. The Bidder must have purchased the bidding documents from EGAT. For a joint venture or a consortium, only one (1) member of the joint venture or consortium is required to purchase the bidding documents.

   In case the Bidder's name is not exactly the same as the purchaser's name, the purchaser shall notify EGAT of the name of the Bidder in writing prior to the bid opening time.

DRAFT

c. The Bidder shall be well-established and maintain a permanent place of business. For a joint venture or consortium, all members of the joint venture or consortium are required to meet this qualification.

d. The Bidder shall not be named in the List of Work Abandoners published by the Permanent Secretary, Ministry of Finance, and/or in the Debarment List and/or in the List of Work Abandoners declared by EGAT.

e. For the Bidder who changes name before submitting the bid, his experience records in previous name shall be considered as the experience records of the Bidder.

f. The Bidder shall not be a Jointly Interested Bidder with other Bidders as from the date of EGAT's issuance of this invitation to bid, or shall not be a person who undertakes any action as an "Obstruction of Fair Price Competition" as defined in Additional Regulation for this invitation.

g. The Bidder shall not either be EGAT's consultant or involve in EGAT's consultancy company under this invitation, or have EGAT's personnel involved in his business as shareholder having voting right that can control his business, director, manager, officer, employee, agent or consultant except the ones who are officially ordered by EGAT to act or participate therein.

h. The Bidder shall not be the person who is privileged or protected not to be taken any legal proceeding under Thai court; provided that such Bidder's government declares that such special privilege is waived.

i. In case of a joint venture or consortium, the Bidder shall carry out all the provision of the Equipment and all Work under such formation from the time of bidding until the fulfillment of the Contract and the parties to the joint venture or the consortium shall accept joint and several liability for performing all obligations under the bid and the Contract.

j. The Bidder shall not propose to supply the Equipment from the country under the state of war whether declared or not.

k. The Bidder shall have adequate fund to meet financial obligations incidental to this Contract.

l. The Bidder shall submit documentary evidence established in accordance with Article B-8. Information to be Submitted with Bid to demonstrate the Bidder's sufficient eligibility to bid and qualification to perform the Contract.

DRAFT

A-3. Eligibility of Bidders: Technical Requirements

I. All Bidders shall meet the following requirements; failure to so comply shall constitute sufficient ground for rejection.

a. The Bidder shall manufacture or supply the Equipment or Work as required under this invitation to bid.

b. If the Bidder is a new company formed by acquisition of or merger with other companies or business units before submitting the Bid, the experience records of any of such previous companies or business units that meet the requirements set forth herein are acceptable as the experience records of the Bidder.

c. The Bidder shall have no just or proper claims pending against the Bidder with respect to breach in the performance of contract on other similar works awarded by EGAT. If the Bidder is a new company formed by acquisition of or merger with other companies or business units, the pending claim of any of such previous companies or business units shall be considered pending claim of the Bidder.

d. The Bidder shall have sufficient capacity to carry out the Work.

e. The bidder shall propose the Equipment manufactured by the qualified manufacturers who shall fulfill the following requirements :

1. Being well-established and maintaining a permanent place of business.

2. The manufacturer shall have the experience records that meet the requirements set forth herein.

   Reference records of either parent or affiliated companies shall not be considered as the records of such manufacturer.

3. If the Manufacturer is a new company formed by acquisition of or merger with other companies or business units, and any of such previous companies or business units has the experience records that meet the requirements set forth herein, such experience records are acceptable as the experience records of the new company, provided that each item of the equipment to be supplied under this bid shall be manufactured from the same source of supply as indicated in each of such relevant supply records as described in Item e.6 below. Otherwise, it shall not be acceptable and shall be sufficient grounds for rejection.

   For the avoidance of doubt, it is not allowed to combine the experience records of the previous companies or business units in order to meet the experience requirements.

4. Being local manufacturer for :

   Battery Charger, Switchyard Lighting Fixtures, Aluminum Tube, Compression Connector and Miscellaneous Hardware, Thermite Welding Material and Rigid Steel Conduit.

DRAFT

5. Regularly manufacturing of Equipment of the type and similar ratings proposed.

6. Having the qualifications for the required equipment as follows :

6.1 For Stationary Battery.

Having one of the following qualifications :

6.1.1 Having supply record of Equipment of the type and similar ratings proposed with successful operation/use in substations/switchyards for at least three (3) consecutive years and at least three (3) sets.

In case the above supply record of Equipment of the type and similar ratings proposed fulfilled the requirements, the manufacturer may propose a newly developed / modified type of such Equipment with successful operation/use for at least one (1) year. The detailed information of the development / modification shall be submitted with his proposal. EGAT, however, reserves the right and will make its own judgement whether or not to consider/ accept the proposed developed / modified type

OR

6.1.2 Having a letter of acceptance for manufacturing and/or fabrication of the specific Equipment issued by EGAT within the scope specified therein. (For the local manufacturer)

6.2 For Suspension Insulator.

Having supply record with successful operation/use for at least three (3) consecutive years in overseas country (not his own country) and at least 10,000 units having the similar ANSI class as proposed.

6.3 For Station Post Insulator.

Having one of the following qualifications :

6.3.1 Having supply record of Equipment of the type and similar ANSI technical reference number proposed with successful operation/use for at least three (3) consecutive years in overseas country (not his own country).

OR

6.3.2 Having a letter of acceptance for manufacturing and/or fabrication of the specific Equipment issued by EGAT within the scope specified therein. (For the local manufacturer)

DRAFT

6.4 For Battery Charger, 33 kV and below Cable Terminations, Switchyard Lighting Fixtures, Aluminum Tube, Compression Connector and Miscellaneous Hardware, Bus Fittings, Ground Rod, Thermite Welding Material, Grounding Hardware, Rigid Steel Conduit and Conduit Fittings.

Having one of the following qualifications :

6.4.1 Having supply record of Equipment of the type and similar ratings proposed with successful operation/use for at least one (1) year.

OR

6.4.2 Having a letter of acceptance for manufacturing and/or fabrication of the specific Equipment issued by EGAT within the scope specified therein. (For the local manufacturer)

6.5 For above 33kV through 500 kV Outdoor Type Cable Termination and Cable Termination for GIS.

Having one of the following qualifications :

6.5.1 Proposing the Equipment of the type and ratings which have ever been accepted by EGAT.

OR

6.5.2 Having a supply record of Equipment of the type and ratings proposed with successful operation/use for at least three (3) consecutive years in an overseas country (not his own country) and at least five (5) three phase sets. The ratings and features of Equipment shall be the same or similar rating as EGAT specifies.

In case that the supply record of Equipment of the type and ratings proposed fulfilled the requirement, the manufacturer may propose a newly developed or modified type of such Equipment with successful operation/use for at least one (1) year in overseas country (not his own country) and at least five (5) three phase sets. The detailed information of the development or modification shall be submitted with his proposal. EGAT, however, reserves the right and will make its own judgment whether or not to consider or accept the proposed developed or modified type.

Supply records of the higher rating Equipment shall not be accepted if the Bidder does not propose such higher rating Equipment in his bid.

DRAFT

7. Having the design test record of Equipment of the type and similar ratings proposed in order to confirm that the manufacturer has an experience of design test performance on his Equipment. The design test record shall be performed according to the test specified in EGAT's specification. In case it is specified in EGAT's specification that the proposed Equipment shall have the design test record of the same type and same rating, such design test record shall be submitted as requested by EGAT.

8. Proposing the manufacturer who has no just or proper claims pending against Equipment on other similar works.

   In case the manufacturer is a new company formed by acquisition or merger with other companies or business units, the pending claim of any of such previous companies or business units shall be considered pending claim of the manufacturer.

A-4. Joint Venture or Consortium

In the event that the successful Bidder is a joint venture or a consortium formed of two or more companies, EGAT requires that the parties to the joint venture or the consortium accept joint and several liability for all obligations under the Contract.

A-5. Preparation and Delivery of Bids

Bids shall be prepared in accordance with the Instructions to Bidders contained in the Bidding Documents in one (1) original ***hard copy and one (1) electronic copy contained in USB flash drive***, in English, on the bid forms included for this purpose and shall be accompanied with a bid security as required under Article B-3. Bid Security in a separate sealed envelope.

For preparation of original hard copy, each page of the original hard copy shall be marked with the volume number and the page number in the lower right-hand corner, for example, Volume 1 of 10 and Page 1 of 100.

For preparation of electronic copy, each volume of the signed original hard copy shall be scanned into one (1) PDF file and each PDF file shall be named according to the volume number.

The USB flash drive shall contain electronic files of the proposal in the following formats :-

- PDF files of all pages of each volume of the proposal, and

- Excel files of filled-in Proposal Data, and

- Excel files of filled-in Price Schedule

DRAFT

In the event of any discrepancy between the original hard copy and the electronic file(s), the original hard copy shall govern.

The envelope of the bids will be marked in capital letters in the lower left-hand corner as follows :

INVITATION TO BID NO. IETS-LPLC-TIEC-NPUP-MC1-01

SUPPLY OF MISCELLANEOUS EQUIPMENT

WORK PLAN TO IMPROVE THE ELECTRICITY SUPPLY MODEL FOR HIGH VOLTAGE SUBSTATION TO ENHANCE THE TRANSMISSION SYSTEM STABILITY AND RELIABILITY

LONG-TERM INVESTMENT PLAN TO ACCOMMODATE LARGE POWER CONSUMER

TRANSMISSION SYSTEM IMPROVEMENT PROJECT IN NORTHEASTERN, LOWER NORTHERN, CENTRAL REGIONS AND BANGKOK AREA TO ENHANCE SYSTEM SECURITY

TRANSMISSION SYSTEM DEVELOPMENT IN THE AREA OF NAN PHRAE AND UTTARADIT PROVINCES FOR POWER PURCHASE FROM LAO PDR PROJECTS

and shall be addressed and delivered to ***EGAT,*** on or before 10:00 a.m., Bangkok Standard Time, *see Tentative Schedule*

If the envelope(s) is not sealed, marked and addressed as required above, EGAT will assume no responsibility for the bid misplacement or premature opening.

Bids will be opened publicly at the ***place and*** time specified ***in Tentative Schedule.***

Bids received after the time stipulated herein shall be rejected and returned unopened.

A-6. Availability of Bidding Documents

The Bidding Documents are available for examination ***and online purchase at http://www4.egat.co.th/fprocurement/biddingeng/*** and can be obtained ***by downloading via link provided by EGAT*** upon payment to EGAT, non-refundable, in the amount of USD 10 or Baht 300 . These prices include the value added tax.

DRAFT

SECTION B

INSTRUCTIONS TO BIDDERS

DRAFT

INSTRUCTIONS TO BIDDERS

Overview of the Procurement Process

Bid prices and the Contract Price shall include value added tax (VAT) imposed under the law of Thailand. The medium cost announced by EGAT is inclusive of VAT and other relevant expenses.

The amounts of performance security, maintenance security, and liquidated damages shall also be based on the Contract Price which is inclusive of VAT (if any).

For evaluation and comparison of Bids, the bid price shall be evaluated according to the conditions specified in the bidding document.

The procurement process is summarized in the following diagram.

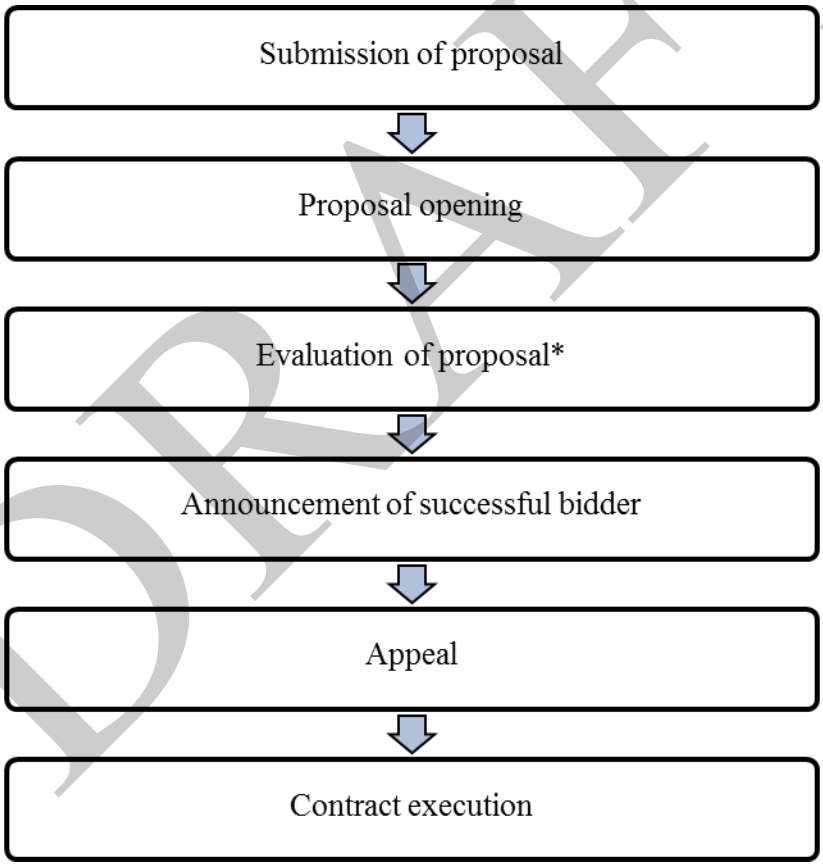

*Remarks

1. The Bidder shall be deemed to have carefully examined all of the terms, conditions and Specifications of the Bidding Documents.
2. EGAT will take into consideration the conformity of the bid to the requirements of the Bidding Documents as well as the suitability for the purpose intended.
3. EGAT will not be bound to accept the bid with the lowest indicated cost. EGAT reserves the right to accept the bid which in its judgement is the lowest evaluated bid.

DRAFT

B-1. Preparation of Bids

a. Bids shall be prepared in English, in one (1) original ***hard copy clearly marked "Original" and one (1) electronic copy contained in USB flash drive,*** submitted at the place and time specified for receipt of bids.

In the event of any discrepancy between ***the original hard copy and the electronic copy, the original hard copy*** shall govern.

For Proposal Data, Bidder shall fill in information of Proposal Data in Excel files contained in the Bidding Documents, and submit one (1) original hard copy with the PDF and Excel files in USB flash drive to EGAT at the same time of bid submission.

For price quotation, Bidder ***shall*** fill ***in*** bid prices in an Excel files of Price Schedules contained in the Bidding Documents in accordance with Price Quotation Instructions in Section C, Part 1: Price Proposal, and submit one (1) original ***hard copy with the PDF and Excel files in USB flash drive*** to EGAT at the same time of bid submission.

VAT at the prevailing rate shall be filled automatically in the Summary of Bid Price of the price schedule in the Excel file subject to Article B-2. Bid Prices.

However, in case Bidder is a consortium formed of two or more companies, Bidder must also submit one (1) original hard copy ***with the PDF and Excel files*** of price schedules of the Work performed by each member of the consortium in addition to hard copies ***with the PDF and Excel files*** of the total bid price as specified above.

If any discrepancy between the bid prices of the Work performed by each member of the consortium and the bid prices of the Bidder occurs, the bid prices of the Bidder shall govern and the bid prices of the Work performed by each member of the consortium shall be adjusted accordingly.

In the event of discrepancy between the original hard copy ***and the PDF or Excel files*** submitted, the original hard copy shall govern**.**

b. Bidder shall not submit more than two (2) proposals and the proposal(s) to be submitted shall conform to the specifications. In case of any deviation from the specifications, Bidder shall follow the provisions under Article B-9. Deviations from Specifications.

c. The "Original" shall be prepared on the bid forms included and made a part of the Bidding Documents, which shall be submitted with all applicable blanks in the bid forms properly filled in, and shall be manually signed in ink by a person or

DRAFT

persons duly authorized. The letter of authorization shall be indicated by written power-of-attorney accompanying the bid.

All pages of the bid, except for unamended printed literature, shall be initialled by the person or persons signing the bid.

d. The bid shall contain no interlineations, erasures or overwriting except as necessary to correct errors made by the Bidder, in which case such corrections shall be initialled by the person or persons signing the bid.

e. Modification by letter or ***by letter submitted electronically or by electronic mail (E-mail) to*** bids already submitted will be considered if received prior to the time fixed for the receipt of bids. Confirmation by letter of any modification ***evidenced*** by post mark or by ***letter submitted electronically or by electronic mail (E-mail)*** should be sent to EGAT not later than the deadline for submission of Bids.

f. No Bidder will be permitted to alter his bid after the bids have been opened, but clarifications not changing the substance of the bid therein may be accepted.

g. Bidder may quote for any schedule or all schedules as called for, but shall quote for all items of the schedule(s) proposed. Consideration will be made as stipulated in Article B-12. Evaluation and Comparison of Bids.

h. Any price discount to be offered shall be clearly stated in the Discount Form accompanied with the Bid to be submitted on the bid opening date specified herein.

B-2. Bid Prices

Currency

Bid prices as shown in Article C-1. Price Schedule shall be firm, not subject to adjustment and payable in the currencies as follows :

a. The bid price shall be quoted in Thai baht, US dollar, euro, Japanese yen, renminbi (Chinese yuan), or in the Bidder's or Manufacturer's home currency only if his currency trading is prevailed at the time of bidding in any international market other than in Bidder's or Manufacturer's home country.

If the currencies quoted by the Bidder do not conform to the requirement set forth herein, EGAT reserves the right to convert the bid price to US dollars by using the exchange rate on the Bloomberg screen which is announced at 10.00 a.m. (Bangkok Time) on the bid opening date. Such converted bid price in US dollars shall be treated as the Bidder's proposed bid price. In such case the Contract Price for such portion under the Contract shall be made in US dollars.

DRAFT

Subject to paragraph a. above, in case the Bidder expects to incur a portion of its expenditures in the performance of the Contract in more than one currency and wishes to be paid accordingly, the bid price shall be expressed in different currencies and the respective amount in each currency together making up the total price.

b. Local expenditures shall be quoted in Thai Baht.

c. Payments will be made in the currency or currencies in which the bid prices have been stated.

Source of Supply and Service

a. Prices for Equipment manufactured in Thailand shall be firm ex-works prices and quoted in Thai Baht. Any import duty and taxes (value added tax included) assessed by the Government of Thailand at the port of entry on imported raw materials or components shall be paid by the Contractor and included in these ex-works prices.

b. Prices for Equipment manufactured outside Thailand (imported Equipment) shall be firm, stated both on FOB Port of Shipment/Vessel and CFR Thai Port basis, and quoted in currencies specified above. Any import duty, excise tax (if any) and value added tax to be assessed by the Government of Thailand at the port of entry shall not be included in the quoted bid prices.

Prices for the following Equipment manufactured outside Thailand which was imported before the bid opening date shall be firm ex-works and quoted in Thai baht, provided that the Bidder shall submit any document(s) evidencing the importation date of such Equipment:

- Power Fuse

- Stationary Battery and Battery Charger

- Insulator for substation

- Cable Termination

- Compression Connector and Miscellaneous Hardware

- Bus Fittings

- Grounding Material

- Substation Miscellaneous

c. Prices for services including cost of installation supervisor (if any) shall be firm.

d. All expenses incurred for the Work specified in Article F-1. Scope of Work shall be included in the quoted Bid Prices.

DRAFT

Price Schedule

The Bidder shall enter a unit price, an amount, or a lump sum price, as required, for every item listed in the price schedule. If the unit price as entered does not conform to the amount entered for the same item, the unit price shall govern. If the sum of the amount entered for individual items does not conform to the total amount entered for these amounts under total bid prices, then the sum of the amount entered for the individual items shall govern.

Where quantity and total price only are required, the unit price shall be taken as the stated total price divided by the quantity specified.

Except for foreign supply, VAT at the prevailing rate shall be filled automatically in the Summary of Bid Price of the price schedule in the Excel file. However, the Contract Price shall include VAT only for the portion of Work which is subject to VAT.

B-3. Bid Security

The original of the bid submitted shall be accompanied with a bid security in the form of a cash deposit, or a cashier cheque issued by a local bank, or a bank guarantee or a letter of guarantee issued only by a local bank or an acceptable financial institution in Thailand, or by a foreign bank counter-guaranteed by a local bank as primary obligor. In case of a cash deposit or a cashier cheque, only Thai baht can be made.

The bid security shall be in a form as per specimen attached or in any other form with essential content in accordance with the specimen, and made payable to EGAT in the amount as specified in Data Sheet. Any bid not being accompanied with bid security shall be rejected. The bid security shall remain in force up to and including ninety (90) Days after the expiry date of the bid validity.

The bid security shall be forfeited in favor of EGAT if :

a. The Bidder withdraws his bid after the bid is opened; or

b. The successful Bidder fails for any reason to execute the Contract or to furnish a performance security.

The Bidder may, upon EGAT's request to extend the bid security when it has expired, refuse to do so without forfeiting the bid security. A Bidder granting the request will be neither required nor permitted to modify his bids.

The bid security of unsuccessful Bidder(s) will be returned as decided by EGAT or within thirty (30) Days following EGAT’s acceptance of the successful Bidder.

The bid security of the successful Bidder will be returned upon execution of the Contract and after the performance security furnished has been accepted by EGAT.

DRAFT

B-4. Validity of Bids

The validity of the bid shall be as specified in Data Sheet.

In the event EGAT requires the validity period to be extended, EGAT may in writing or by ***letter submitted electronically or by electronic mail (E-mail)*** so notify the Bidders at least fourteen (14) Days prior to the expiry date of the validity period, in which event any Bidder not agreeing to such request for extension may withdraw his bid by so advising EGAT in writing or by ***letter submitted electronically or by electronic mail (E-mail)*** prior to the expiry date of the original validity period. If the advice of withdrawal shall not have been received by EGAT prior to the said date, the extension shall be deemed to have been accepted by the Bidder, and the Bidder shall be required to extend the effective period of the bid security accordingly.

B-5. Delivery of Bids

Where bids are submitted by mail, the hour and date of receipt of the bid will be taken as that certified by EGAT. For all bids delivered directly, a receipt will be furnished to the Bidder indicating the place, hour, and date of delivery. Late bids will be returned unopened.

B-6. Withdrawal of Bids

Bids may be withdrawn only on written requests which are received by EGAT prior to the time fixed for the receipt of the bids. Negligence on the part of the Bidder in preparing his bid confers no right for the withdrawal of the bid after it has been opened. Whenever a bid has been withdrawn, it will be returned unopened to the Bidder.

B-7. Interpretation of Bidding Documents before Bid Opening

If a prospective Bidder is in doubt about the true meaning of any part of the Bidding Documents, the Bidder may submit to EGAT a written request for a reply or an interpretation; provided that sufficient time is allowed for a reply to reach the prospective Bidder prior to the date specified for bid opening. An interpretation will be given in the form of a Supplemental Notice furnished to all prospective Bidders. Receipt of all Supplemental Notices shall be acknowledged by each prospective Bidder on the Proposal. Oral interpretation of the Bidding Documents will not be binding.

DRAFT

B-8. Information to be Submitted with Bid

Each Bidder shall submit with his bid the following documents, data and information in English language in addition to any other information called for elsewhere in the Bidding Documents in order to enable EGAT to fully evaluate the Proposal of the Bidder :

a. Name of manufacturer and country of origin and type or model of Equipment he proposes to furnish.

b. Data, drawings, catalogue and descriptive materials which will show equipment arrangement, general dimensions, principles of operation, extent of factory assembly, and the materials from which parts are made.

c. Sufficient references describing the technical experience of the manufacturers, including lists of the Equipment supplied and installed overseas. If possible, certificates issued by the user and/or consulting engineers supporting the said work and record of commercial operation in good condition should also be submitted.

d. Copies of Auditor's certified balance sheet of the Bidder for the past three (3) consecutive years.

e. In case the local manufactured Equipment is proposed, the sufficient documentary evidence, if any, showing that the manufacturers have been acknowledged for producing standard product by the Thai Industrial Standard Institute (TISI), Ministry of Industry, or registered with TISI, or ISO 9000 certified by the National Accreditation Council of Thailand (NAC) or obtained the privilege from the Board of Investment or accepted by EGAT for manufacture of such Equipment, is required to be submitted with the Bid.

f. Sufficient evidence documents clearly demonstrating that a firm/company who changes its name, merges with, or acquires other company/companies, or forms a new company by merging its business unit with those of other companies, and the experience records of the new company clearly demonstrating that it has sufficient evidence of running the business as before.

g. A statement of proposed minor deviations from the Specifications along with complete specifications and all necessary descriptive literature for any proposed alternative Equipment or procedure, as required under Article B-9. Deviations from Specifications.

h. Where Proposal Data Forms are provided, the Bidder shall enter all information as directed.

DRAFT

i. Where the Specifications provide for submission of a sample or samples, the Bidder shall submit same together with his bid.

j. Joint Venture/Consortium Agreement with a statement that each member of a joint venture/consortium will be jointly and severally responsible and liable for the complete execution of the work (in case the Bidder is a joint venture or consortium).

k. Confirmation Form of not being a Jointly Interested Bidder with other Bidders and not being a person who undertakes any actions as an Obstruction of Fair Price Competition, and Registration/Non-registration with the Revenue Department as a VAT registrant.

If the Bidder has registered as a VAT registrant, he shall submit EGAT an evidence of VAT registration. On the contrary, if the Bidder is not registered as a VAT registrant, he shall inform EGAT whether he will register as a VAT registrant or not.

In case the Bidder is a consortium, each member of the consortium shall fill in the Confirmation Form provided for consortium Bidders.

l. Filled-in Documentary List and documents required according to Additional Regulation.

m. A statement indicating that the parent manufacturer shall certify and be responsible for the design, production process and quality control. This information is required only for the Equipment specified in Data Sheet.

Should the Bidder fail to submit any of the document described above and neglect to submit the same to EGAT within the time as specified by EGAT, such failure shall be sufficient reason for rejection of his bid.

Verbal statements made by the Bidder at any time regarding quality, quantity, or arrangement of Equipment will not be considered.

If alternative Equipment is indicated in the bid, it shall be understood that EGAT will have the option of selecting any one of the alternates so indicated and such selection shall not be a cause for extra compensation or extension of time.

In case the Bidder proposes alternative Equipment, with the condition to supply any one of the alternates so indicated at his option, such bid will be considered conditional and may be considered sufficient reasons for rejection.

DRAFT

B-9. Deviations from Specifications

Unless otherwise provided in the Specifications, the quality of Equipment and workmanship shall comply in all respects with the Standards required under the bidding documents.

If the Bidder proposes any minor deviations from the specifications, he shall submit a statement of each proposed deviation referenced to the particular Article of these specifications, details on the design drawings or article, paragraph and section of referenced standards or specifications. Full details of all minor deviations together with confirmation shall be submitted with the bid in a form provided in Section C. The Bidder shall submit, with his bid, copies of the standards or specifications proposed for his deviations. In case there is no statement in the form provided in Section C in the Bidder's proposal on the proposed deviations, the bid shall be regarded by EGAT as conforming in all respects to the terms and conditions and Specifications as stated in the bidding documents at no additional cost to the bid price.

Notwithstanding the foregoing, it is at EGAT's sole discretion in determining whether any of such proposed deviations is acceptable and in determining whether it is minor or major deviation.

B-10. Rejection of Bids

EGAT reserves the right not to accept the lowest evaluated bid.

Bids shall be strictly based on the Specifications and terms and conditions in the Bidding Documents. Should any bid fail to comply with the terms and conditions stipulated in these Bidding Documents, especially those under Article pertaining to payment or be incomplete, conditional or obscure, or contain additions not called for, or irregularities of any kind, it will be liable to rejection.

EGAT also reserves the right to reject any or all bids submitted without giving reason or to reject the bid from any Bidder who fails to satisfy EGAT that the bid complies with the terms and conditions stipulated in these bidding documents without any non-compliance which is deemed substantial and advantageous over other Bidders.

B-11. Delivery Time

Delivery time required is indicated for each respective Price Schedule in the Proposal section of the Bidding Documents, and shall be carefully observed. However, no preference will be given in the bid evaluation for earlier delivery than the stipulated delivery period.

All bids specifying delivery time later than those indicated may be rejected.

DRAFT

B-12. Evaluation and Comparison of Bids

Bid prices pursuant to Article B-2. Bid Prices will be evaluated as follows :

1. The evaluation of bid prices shall be specified in Data Sheet.
2. Bid prices will be converted into Thai Baht at the selling exchange rates, published by the Bank of Thailand, www.bot.or.th between Baht and other currencies on the bid opening date.
3. The rate of import duty prevailed on the bid opening date will be used for the purpose of bid evaluation of CFR Thai Port Price.
4. The prices to be used for evaluation and comparison purpose shall be as follows :

    1. Ex-works price including VAT for the final sale direct to EGAT for locally manufactured Equipment

    2. CFR Thai Port of Equipment to be imported plus the calculated insurance premium of 0.072% of [CFR price+10% (CFR price)], import duty, excise tax (if any), value added tax to be assessed by the Thai Government at the port of entry for imported Equipment , and 0.6 % of CFR price for customs clearance

    The rate of import duty to be used for price comparison shall be as follows:

    a) For Equipment consisting of separate components which are intended to contribute together as a functional unit and imported under partial import entry - using a normal single tariff rate published in the Customs Tariff Decree for such Equipment

    b) For other Equipment and spare parts

    i) In case any imported Equipment and spare part is proposed from one (1) country of origin for the same item:

    - Country of Origin Under Free Trade Agreement (FTA) – using lower comparing rate between the FTA rate and the normal rate published in the Customs Tariff Decree;

    - Country of Origin Under Non FTA – using a normal rate published in the Customs Tariff Decree.

    ii) In case any imported Equipment and spare part is proposed from different countries of origin for the same item, a normal rate published in the Customs Tariff Decree for such Equipment and spare part will be used for price comparison.

DRAFT

3. Cost of local transportation including VAT, if any

4. Cost of installation supervisor including VAT, if any

5. Guaranteed losses of Equipment, if any, at the rate as stipulated in the Proposal Data.

Price for optional items, if any, will not be taken into consideration; however, Bidders shall also quote the prices thereof as required.

B-13. Acceptance of Bids

EGAT will not be bound to accept the bid with the lowest indicated cost. EGAT reserves the right to accept the bid which in its judgement is the lowest evaluated bid. In making its selection, EGAT will take into consideration the conformity of the bid to the requirements of the Bidding Documents and Specifications, guaranteed delivery time, the suitability for the purpose intended and whenever applicable, compensating factors will be applied to deviation or departures from Specifications. EGAT will also take into consideration whether the Bidder's experience, organization, facilities and financial resources will assure the successful carrying out of the Work under the Contract within the time specified.

B-14. Appeal

Disqualified or unsuccessful Bidders who see that their disqualification or failure are due to EGAT's non-compliance with EGAT's procurement regulations may appeal to EGAT within fifteen (15) Days from the date of receipt or announcement, whichever comes first, of EGAT's final evaluation result. An appeal shall be made in writing and clearly state the cause of appeal and argument with referred facts or regulations and related documents. Appealing does not constitute a ground for suspending the ongoing procurement process unless EGAT's Governor agrees otherwise.

The Contract or Purchase Order shall not be executed until the period of appeal has ended and there is no appeal. In the event there is an appeal during such period, the Contract or Purchase Order shall not be executed unless EGAT's Governor concurs.

Decision of EGAT's Governor is final and conclusive.

DRAFT

B-15. Award of Contract

The Contract will be awarded as soon as practicable after opening of the bids, to the Bidder with the lowest evaluated bid. EGAT reserves the right to award the Contract on the basis of standards and specifications as proposed by the Bidder, if in the opinion of EGAT, they are considered acceptable.

At the time of execution of the Contract, the successful Bidder shall furnish the performance security in accordance with the conditions of Contract in the specimen of performance security provided in the bidding documents.

Failure to comply with the condition as expressed in the specimen of performance security will lead to withdrawal of award and cancellation of Contract, and in this respect EGAT reserves the right to award the Contract to the Bidder with the next lowest evaluated substantially responsive bid and the Bidder who defaults shall have his bid security forfeited in favor of EGAT.

After EGAT notifies the successful Bidder that his bid has been accepted, EGAT will send the Bidder the Contract Documents incorporating all agreements between the parties not later than ninety (90) Days after confirmation of Letter of Award of Contract.

Promptly but not later than fifteen (15) Days after receipt of the Contract, the successful Bidder shall sign and date the Contract and return it to EGAT.

B-16. Bidder's Responsibility

The Bidder shall be deemed to have carefully examined all of the terms, conditions and Specifications of this Invitation to Bid, and also to have fully informed himself as to all conditions, local or otherwise, affecting the carrying out of the Work of the Contract, and to have formulated an estimate of the facilities available and needed.

The Bidder shall also be liable to any rules and regulations as well as Acts enforced in the Kingdom of Thailand. Failure to do so will be at the Bidder's risk.

B-17. Supplemental Notices

Supplemental Notices to the Bidding Documents may be issued prior to the date of opening of bids to clarify the Bidding Documents or to reflect modifications in the design or Contract terms. Each supplemental notice issued will be distributed to each person or organization to whom the Bidding Documents have been issued. The recipient shall acknowledge receipt of each supplemental notice by signing and returning in a reasonable time the receipt form distributed with the supplemental notice. All supplemental notices issued shall become a part of the Contract Documents.

DRAFT

B-18. Cost of Bidding

Bidders will not be reimbursed for any expenses they may incur in preparing and submitting their bids.

B-19. Cancellation of Bid

EGAT reserves the right not to accept any quantity or item or schedule or package, or to cancel the bid without purchasing any item. Bidders shall not be entitled to claim EGAT for any losses and/or damages in this connection. EGAT also reserves the right to cancel the bid should there be any reasonable grounds that bidder is not in good faith in submitting bid such as submitting false documents.

In case of bid cancellation, EGAT will not be responsible for any losses and/or damages and will not refund payment of Bidding Documents.

DRAFT

SPECIMEN OF BID SECURITY

Whereas.....(hereinafter called "the Bidder") has submitted his bid dated.....for.....(hereinafter called "the Bid") under Invitation to Bid No.....KNOW ALL MEN by these presents that WE.....of.....having our registered office at.....(hereinafter called "the Guarantor") are bound unto Electricity Generating Authority of Thailand (hereinafter called "EGAT") in the sum of..... (in words : .....) for which payment well and truly to be made to EGAT, the Guarantor binds itself, its successors and assigns by these presents. Sealed with the Common Seal of the said Bank this.....(date).....day of…….(month)……., ……..(year).....

THE CONDITIONS of this obligation are :

1. If the Bidder withdraws his bid during the period of bid validity specified in the Bidding Documents; or

2. If the Bidder, having been notified of the acceptance of his bid by EGAT during the period of bid validity;

   (a) fails or refuses to execute the Contract, if required; or

   (b) fails or refuses to furnish the Performance Security, in accordance with the Instructions to Bidders;

We, the Guarantor, unconditionally undertake to pay to EGAT as the primary obligor, up to the above amount upon receipt of its first written demand, without EGAT having to substantiate its demand.

This guarantee will remain in force up to and including ninety (90) Days after the expiry date of the bid validity.

_____

(Signature of the Bank)

DRAFT

SECTION C

PROPOSAL

DRAFT

INVITATION TO BID NO. IETS-LPLC-TIEC-NPUP-MC1-01

PROPOSAL

FOR

SUPPLY OF MISCELLANEOUS EQUIPMENT

WORK PLAN TO IMPROVE THE ELECTRICITY SUPPLY MODEL FOR HIGH VOLTAGE SUBSTATION TO ENHANCE THE TRANSMISSION SYSTEM STABILITY AND RELIABILITY

LONG-TERM INVESTMENT PLAN TO ACCOMMODATE LARGE POWER CONSUMER

TRANSMISSION SYSTEM IMPROVEMENT PROJECT IN NORTHEASTERN, LOWER NORTHERN, CENTRAL REGIONS AND BANGKOK AREA TO ENHANCE SYSTEM SECURITY

TRANSMISSION SYSTEM DEVELOPMENT IN THE AREA OF NAN PHRAE AND UTTARADIT PROVINCES FOR POWER PURCHASE FROM LAO PDR PROJECTS

C-1. Price Schedule

The undersigned Bidder, having carefully examined the Bidding Documents, hereby offers and proposes to perform the services and to furnish the Equipment on the basis of FOB Port of Shipment/Vessel or CFR Thai Port as specified in the Delivery Schedule and Distribution List for foreign supply or Ex-works delivery for local supply, in accordance with all provisions and conditions as described herein, all for the prices stated in the Schedule(s) attached.

DRAFT

Note : 1. Article C-1. Price Schedule

For imported Equipment, EGAT reserves the right to award the Contract on either FOB Port of Shipment/Vessel or CFR Thai Port basis.

2. Article E-12. Performance Security

The performance security required under Article E-12. Performance Security shall be ten (10) per cent, round up to the nearest whole number, of the Contract Price. Cost for furnishing the performance security shall be spread over the items proposed.

C-2. Penalty for Equipment Not Meeting Guaranteed Characteristics

The losses of Equipment shall be evaluated with the same rate as stipulated in the Proposal Data.

If the Equipment proposed fails to meet the guaranteed characteristics or the price of the measured losses is higher than the price of the guaranteed losses, the Contract price of Equipment shall be reduced by the different amount of the comparison between the price of the measured losses and the price of the guaranteed losses.

C-3. Guaranteed Delivery Time

Delivery Time of Equipment is required as indicated in the Delivery Schedule and Distribution List attached. The undersigned Bidder guarantees to make and to complete the delivery of Equipment proposed as required by EGAT.

Whenever the Equipment in any item are sub-itemized, the Contractor shall endeavor not to make partial shipment/delivery by sub-items.

In case of failure on the part of the Contractor to comply with the provision of the above paragraph, it is hereby understood that the Equipment in such particular items shall be deemed undelivered unless and until each all sub-items have been shipped/delivered.

C-4. Drawing and Document Submission Schedule

Drawing and Document Submission Schedule is required as indicated in Article F-11. Drawings and Documents to be Furnished by Contractor. The undersigned Bidder guarantees to submit all drawings and documents as required by EGAT.

C-5. Estimate of Deliveries

The estimated number of individual shipment/delivery, shipping point or points, estimated delivery date and estimated shipping weights and volumes for each individual shipping will be as follows :

Number of Shipments	Item No.	Shipping Point	Estimated Delivery Date from Shipping Point	Total Weight kg.	Total Volume Cu.m.
---	---	---	---	---	---
---	---	---	---	---	---
---	---	---	---	---	---
---	---	---	---	---	---

DRAFT

C-6. Bid Security

Bid security in the amount of_____,
(in words)
_____has been deposited with EGAT.
(number)

C-7. Supplemental Notices

The undersigned Bidder certifies that the following Supplemental Notices have been received for the Contract Documents :

_____

_____

_____

_____

_____

Proposal Submission Date _____Day of _____A.D. _____

Firm's Name _____

By _____

Title _____

Firm's Address _____

_____

_____

_____

Witness

_____

DRAFT

PART 1: PRICE PROPOSAL

DRAFT

PART 1 : PRICE PROPOSAL

PRICE QUOTATION INSTRUCTIONS

This part of the Bidding Document comprises :

1. Summary of Bid Prices

2. Price Schedules

Cost of Supply of Equipment comprises Foreign Portion and Local Portion. For Foreign Portion, Bidder is allowed to quote price in only four (4) different currencies. For Local Portion, default currency is Baht (THB).

Bidder shall fill in the price schedules in the Excel file(s), item by item. Then, the total prices for each schedule and Summary of Bid Prices will be automatically calculated.

Filling-in the data shall be in accordance with the following instructions :

1. Bidder shall fill in all data required in blue cells of the price schedules - Currency and Unit Price.

2. For local portion, the default is THB.

3. For foreign portion, Bidder shall fill a currency code in a column “Currency”.

Remarks: Price Schedules are created in Microsoft Office Excel 2007.

DRAFT

INVITATION TO BID NO. IETS-LPLC-TIEC-NPUP-MC1-01

SUMMARY OF BID PRICE

SUPPLY OF MISCELLANEOUS EQUIPMENT

WORK PLAN TO IMPROVE THE ELECTRICITY SUPPLY MODEL FOR HIGH VOLTAGE SUBSTATION TO ENHANCE THE TRANSMISSION SYSTEM STABILITY AND RELIABILITY
LONG-TERM INVESTMENT PLAN TO ACCOMMODATE LARGE POWER CONSUMER
TRANSMISSION SYSTEM IMPROVEMENT PROJECT IN NORTHEASTERN, LOWER NORTHERN, CENTRAL REGIONS AND BANGKOK AREA TO ENHANCE SYSTEM SECURITY
TRANSMISSION SYSTEM DEVELOPMENT IN THE AREA OF NAN PHRAE AND UTTARADIT PROVINCES FOR POWER PURCHASE FROM LAO PDR PROJECTS

No.	Description	Currency	Supply of Equipment	
			Foreign Supply	Local Supply
			CFR Thai Port	Ex-works Price (excluding VAT) Baht
			Amount	Amount
1	Schedule A1 : Switchyard Lighting Fixture			
2	Schedule A2 : Solar Lighting Fixture			
3	Schedule B6 : Rigid Steel Conduit			

DRAFT

INVITATION TO BID NO. IETS-LPLC-TIEC-NPUP-MC1-01

SUMMARY OF BID PRICE

SUPPLY OF MISCELLANEOUS EQUIPMENT

WORK PLAN TO IMPROVE THE ELECTRICITY SUPPLY MODEL FOR HIGH VOLTAGE SUBSTATION TO ENHANCE THE TRANSMISSION SYSTEM STABILITY AND RELIABILITY
LONG-TERM INVESTMENT PLAN TO ACCOMMODATE LARGE POWER CONSUMER
TRANSMISSION SYSTEM IMPROVEMENT PROJECT IN NORTHEASTERN, LOWER NORTHERN, CENTRAL REGIONS AND BANGKOK AREA TO ENHANCE SYSTEM SECURITY
TRANSMISSION SYSTEM DEVELOPMENT IN THE AREA OF NAN PHRAE AND UTTARADIT PROVINCES FOR POWER PURCHASE FROM LAO PDR PROJECTS

No.	Description	Currency	Supply of Equipment	
			Foreign Supply	Local Supply
			CFR Thai Port	Ex-works Price (excluding VAT) Baht
			Amount	Amount
4	Schedule B7 : Conduit Fitting			
5	Schedule C1 : Switchyard Lighting Fixture			
6	Schedule D5 : Rigid Steel Conduit			

DRAFT

INVITATION TO BID NO. IETS-LPLC-TIEC-NPUP-MC1-01

SUMMARY OF BID PRICE

SUPPLY OF MISCELLANEOUS EQUIPMENT

WORK PLAN TO IMPROVE THE ELECTRICITY SUPPLY MODEL FOR HIGH VOLTAGE SUBSTATION TO ENHANCE THE TRANSMISSION SYSTEM STABILITY AND RELIABILITY
LONG-TERM INVESTMENT PLAN TO ACCOMMODATE LARGE POWER CONSUMER
TRANSMISSION SYSTEM IMPROVEMENT PROJECT IN NORTHEASTERN, LOWER NORTHERN, CENTRAL REGIONS AND BANGKOK AREA TO ENHANCE SYSTEM SECURITY
TRANSMISSION SYSTEM DEVELOPMENT IN THE AREA OF NAN PHRAE AND UTTARADIT PROVINCES FOR POWER PURCHASE FROM LAO PDR PROJECTS

No.	Description	Currency	Supply of Equipment	
			Foreign Supply	Local Supply
			CFR Thai Port	Ex-works Price (excluding VAT) Baht
			Amount	Amount
7	Schedule D6 : Conduit Fitting			
BID PRICE				Baht
VAT				Baht
SUMMARY OF BID PRICE				Baht

DRAFT

INVITATION TO BID NO. IETS-LPLC-TIEC-NPUP-MC1-01

SUMMARY OF BID PRICE

SUPPLY OF MISCELLANEOUS EQUIPMENT

WORK PLAN TO IMPROVE THE ELECTRICITY SUPPLY MODEL FOR HIGH VOLTAGE SUBSTATION TO ENHANCE THE TRANSMISSION SYSTEM STABILITY AND RELIABILITY
LONG-TERM INVESTMENT PLAN TO ACCOMMODATE LARGE POWER CONSUMER
TRANSMISSION SYSTEM IMPROVEMENT PROJECT IN NORTHEASTERN, LOWER NORTHERN, CENTRAL REGIONS AND BANGKOK AREA TO ENHANCE SYSTEM SECURITY

No.	Description	Supply of Equipment
		Local Supply
		Ex-works Price (excluding VAT) Baht
		Amount
1	Schedule A3 : Aluminum Tube	
2	Schedule B1 : Aluminum Tube	

DRAFT

INVITATION TO BID NO. IETS-LPLC-TIEC-NPUP-MC1-01

SUMMARY OF BID PRICE

SUPPLY OF MISCELLANEOUS EQUIPMENT

WORK PLAN TO IMPROVE THE ELECTRICITY SUPPLY MODEL FOR HIGH VOLTAGE SUBSTATION TO ENHANCE THE TRANSMISSION SYSTEM STABILITY AND RELIABILITY
LONG-TERM INVESTMENT PLAN TO ACCOMMODATE LARGE POWER CONSUMER
TRANSMISSION SYSTEM IMPROVEMENT PROJECT IN NORTHEASTERN, LOWER NORTHERN, CENTRAL REGIONS AND BANGKOK AREA TO ENHANCE SYSTEM SECURITY

No.	Description	Supply of Equipment Local Supply Ex-works Price (excluding VAT) Baht Amount
3	Schedule C2 : Aluminum Tube	
BID PRICE		Baht
VAT		Baht
SUMMARY OF BID PRICE		Baht

DRAFT

INVITATION TO BID NO. IETS-LPLC-TIEC-NPUP-MC1-01

SUMMARY OF BID PRICE

SUPPLY OF MISCELLANEOUS EQUIPMENT

WORK PLAN TO IMPROVE THE ELECTRICITY SUPPLY MODEL FOR HIGH VOLTAGE SUBSTATION TO ENHANCE THE TRANSMISSION SYSTEM STABILITY AND RELIABILITY
LONG-TERM INVESTMENT PLAN TO ACCOMMODATE LARGE POWER CONSUMER
TRANSMISSION SYSTEM IMPROVEMENT PROJECT IN NORTHEASTERN, LOWER NORTHERN, CENTRAL REGIONS AND BANGKOK AREA TO ENHANCE SYSTEM SECURITY

No.	Description	Supply of Equipment
		Local Supply
		Ex-works Price (excluding VAT) Baht
		Amount
1	Schedule A4 : Compression Connector and Miscellaneous Hardware	
2	Schedule B2 : Compression Connector and Miscellaneous Hardware	
3	Schedule C3 : Compression Connector and Miscellaneous Hardware	

DRAFT

INVITATION TO BID NO. IETS-LPLC-TIEC-NPUP-MC1-01

SUMMARY OF BID PRICE

SUPPLY OF MISCELLANEOUS EQUIPMENT

WORK PLAN TO IMPROVE THE ELECTRICITY SUPPLY MODEL FOR HIGH VOLTAGE SUBSTATION TO ENHANCE THE TRANSMISSION SYSTEM STABILITY AND RELIABILITY
LONG-TERM INVESTMENT PLAN TO ACCOMMODATE LARGE POWER CONSUMER
TRANSMISSION SYSTEM IMPROVEMENT PROJECT IN NORTHEASTERN, LOWER NORTHERN, CENTRAL REGIONS AND BANGKOK AREA TO ENHANCE SYSTEM SECURITY

No.	Description	Supply of Equipment Local Supply Ex-works Price (excluding VAT) Baht Amount
4	Schedule D1 : Compression Connector and Miscellaneous Hardware	
BID PRICE		Baht
VAT		Baht
SUMMARY OF BID PRICE		Baht

DRAFT

INVITATION TO BID NO. IETS-LPLC-TIEC-NPUP-MC1-01

SUMMARY OF BID PRICE

SUPPLY OF MISCELLANEOUS EQUIPMENT

WORK PLAN TO IMPROVE THE ELECTRICITY SUPPLY MODEL FOR HIGH VOLTAGE SUBSTATION TO ENHANCE THE TRANSMISSION SYSTEM STABILITY AND RELIABILITY
LONG-TERM INVESTMENT PLAN TO ACCOMMODATE LARGE POWER CONSUMER
TRANSMISSION SYSTEM IMPROVEMENT PROJECT IN NORTHEASTERN, LOWER NORTHERN, CENTRAL REGIONS AND BANGKOK AREA TO ENHANCE SYSTEM SECURITY
TRANSMISSION SYSTEM DEVELOPMENT IN THE AREA OF NAN PHRAE AND UTTARADIT PROVINCES FOR POWER PURCHASE FROM LAO PDR PROJECTS

No.	Description	Currency	Supply of Equipment	
			Foreign Supply	Local Supply
			CFR Thai Port	Ex-works Price (excluding VAT) Baht
			Amount	Amount
1	Schedule B3 : 500 kV Bus Fitting			
2	Schedule D2 : 500 kV Bus Fitting			
BID PRICE				Baht
VAT				Baht
SUMMARY OF BID PRICE				Baht

DRAFT

INVITATION TO BID NO. IETS-LPLC-TIEC-NPUP-MC1-01

SUMMARY OF BID PRICE

SUPPLY OF MISCELLANEOUS EQUIPMENT

WORK PLAN TO IMPROVE THE ELECTRICITY SUPPLY MODEL FOR HIGH VOLTAGE SUBSTATION TO ENHANCE THE TRANSMISSION SYSTEM STABILITY AND RELIABILITY
LONG-TERM INVESTMENT PLAN TO ACCOMMODATE LARGE POWER CONSUMER
TRANSMISSION SYSTEM IMPROVEMENT PROJECT IN NORTHEASTERN, LOWER NORTHERN, CENTRAL REGIONS AND BANGKOK AREA TO ENHANCE SYSTEM SECURITY
TRANSMISSION SYSTEM DEVELOPMENT IN THE AREA OF NAN PHRAE AND UTTARADIT PROVINCES FOR POWER PURCHASE FROM LAO PDR PROJECTS

No.	Description	Currency	Supply of Equipment	
			Foreign Supply	Local Supply
			CFR Thai Port	Ex-works Price (excluding VAT) Baht
			Amount	Amount
1	Schedule A5 : 230 kV and below Bus Fitting			
2	Schedule B4 : 230 kV and below Bus Fitting			
3	Schedule C4 : 230 kV and below Bus Fitting			

DRAFT

INVITATION TO BID NO. IETS-LPLC-TIEC-NPUP-MC1-01

SUMMARY OF BID PRICE

SUPPLY OF MISCELLANEOUS EQUIPMENT

WORK PLAN TO IMPROVE THE ELECTRICITY SUPPLY MODEL FOR HIGH VOLTAGE SUBSTATION TO ENHANCE THE TRANSMISSION SYSTEM STABILITY AND RELIABILITY
LONG-TERM INVESTMENT PLAN TO ACCOMMODATE LARGE POWER CONSUMER
TRANSMISSION SYSTEM IMPROVEMENT PROJECT IN NORTHEASTERN, LOWER NORTHERN, CENTRAL REGIONS AND BANGKOK AREA TO ENHANCE SYSTEM SECURITY
TRANSMISSION SYSTEM DEVELOPMENT IN THE AREA OF NAN PHRAE AND UTTARADIT PROVINCES FOR POWER PURCHASE FROM LAO PDR PROJECTS

No.	Description	Currency	Supply of Equipment	
			Foreign Supply	Local Supply
			CFR Thai Port	Ex-works Price (excluding VAT) Baht
			Amount	Amount
4	Schedule D3 : 230 kV and below Bus Fitting			
BID PRICE				Baht
VAT				Baht
SUMMARY OF BID PRICE				Baht

DRAFT

INVITATION TO BID NO. IETS-LPLC-TIEC-NPUP-MC1-01

SUMMARY OF BID PRICE

SUPPLY OF MISCELLANEOUS EQUIPMENT

WORK PLAN TO IMPROVE THE ELECTRICITY SUPPLY MODEL FOR HIGH VOLTAGE SUBSTATION TO ENHANCE THE TRANSMISSION SYSTEM STABILITY AND RELIABILITY
LONG-TERM INVESTMENT PLAN TO ACCOMMODATE LARGE POWER CONSUMER
TRANSMISSION SYSTEM IMPROVEMENT PROJECT IN NORTHEASTERN, LOWER NORTHERN, CENTRAL REGIONS AND BANGKOK AREA TO ENHANCE SYSTEM SECURITY
TRANSMISSION SYSTEM DEVELOPMENT IN THE AREA OF NAN PHRAE AND UTTARADIT PROVINCES FOR POWER PURCHASE FROM LAO PDR PROJECTS

No.	Description	Currency	Supply of Equipment	
			Foreign Supply	Local Supply
			CFR Thai Port	Ex-works Price (excluding VAT) Baht
			Amount	Amount
1	Schedule A6 : Grounding Material			
2	Schedule B5 : Grounding Material			
3	Schedule C5 : Grounding Material			

DRAFT

INVITATION TO BID NO. IETS-LPLC-TIEC-NPUP-MC1-01

SUMMARY OF BID PRICE

SUPPLY OF MISCELLANEOUS EQUIPMENT

WORK PLAN TO IMPROVE THE ELECTRICITY SUPPLY MODEL FOR HIGH VOLTAGE SUBSTATION TO ENHANCE THE TRANSMISSION SYSTEM STABILITY AND RELIABILITY
LONG-TERM INVESTMENT PLAN TO ACCOMMODATE LARGE POWER CONSUMER
TRANSMISSION SYSTEM IMPROVEMENT PROJECT IN NORTHEASTERN, LOWER NORTHERN, CENTRAL REGIONS AND BANGKOK AREA TO ENHANCE SYSTEM SECURITY
TRANSMISSION SYSTEM DEVELOPMENT IN THE AREA OF NAN PHRAE AND UTTARADIT PROVINCES FOR POWER PURCHASE FROM LAO PDR PROJECTS

No.	Description	Currency	Supply of Equipment	
			Foreign Supply	Local Supply
			CFR Thai Port	Ex-works Price (excluding VAT) Baht
			Amount	Amount
4	Schedule D4 : Grounding Material			
BID PRICE				Baht
VAT				Baht
SUMMARY OF BID PRICE				Baht

DRAFT

INVITATION TO BID NO. IETS-LPLC-TIEC-NPUP-MC1-01

Schedule A1 : Switchyard Lighting Fixture

SUPPLY OF MISCELLANEOUS EQUIPMENT
WORK PLAN TO IMPROVE THE ELECTRICITY SUPPLY MODEL FOR HIGH VOLTAGE SUBSTATION TO ENHANCE THE TRANSMISSION SYSTEM STABILITY AND RELIABILITY

Item No.	Description	Qty.	Unit	**Supply of Equipment** Local Supply Ex-works Price (excluding VAT) Baht	
				Unit Price	Amount
A1-1	Reference : Specification No.611 Flood lighting fixture, LED lamp, 10000 lumen, wide-beam, complete with control gear as per Specification attached	18			
A1-2	Tapered galvanized steel lamp post H=5000 mm. complete with 2 A 250 V plug fuse, 20 A 500 V terminal block for accepting 4 sq.mm. of incoming and outgoing cables and anchor bolts as per Dwg. No. ST-LP-0-03 and SD-AB-0-01	2			
Total Price for Schedule A1				**Baht**	

DRAFT

INVITATION TO BID NO. IETS-LPLC-TIEC-NPUP-MC1-01

Schedule A2 : Solar Lighting Fixture

SUPPLY OF MISCELLANEOUS EQUIPMENT
WORK PLAN TO IMPROVE THE ELECTRICITY SUPPLY MODEL FOR HIGH VOLTAGE SUBSTATION TO ENHANCE THE TRANSMISSION SYSTEM STABILITY AND RELIABILITY

Item No.	Description	Qty.	Unit	**Supply of Equipment** Local Supply Ex-works Price (excluding VAT) Baht	
				Unit Price	Amount
A2-1	Reference : Specification No.611 Solar lighting fixture for fence and access road, LED, All in one type as per Dwg. No. LT-FX-0-03	9			
A2-2	Tapered galvanized steel lamp post H=4500 mm. complete with anchor bolts as per Dwg. No. ST-LP-0-03 and SD-AB-0-01	9			
	* Equipments which shall be used together as a complete set refering in Article relevant to Liquidated Damages for Late Delivery of Equipment are item Nos. A2-1 with A2-2				
Total Price for Schedule A2				**Baht**	

DRAFT

INVITATION TO BID NO. IETS-LPLC-TIEC-NPUP-MC1-01

Schedule A3 : Aluminum Tube

SUPPLY OF MISCELLANEOUS EQUIPMENT

WORK PLAN TO IMPROVE THE ELECTRICITY SUPPLY MODEL FOR HIGH VOLTAGE SUBSTATION TO ENHANCE THE TRANSMISSION SYSTEM STABILITY AND RELIABILITY

Item No.	Description	Qty.	Unit	**Supply of Equipment**	
				Local Supply	
				Ex-works Price (excluding VAT) Baht	
				Unit Price	Amount
	Reference : Specification No.605				
A3-1	Aluminum tube 3.0" IPS Sch.40, 6 meters long	165			
A3-2	Aluminum tube 5.0" IPS Sch.40, 6 meters long	75			
Total Price for Schedule A3				**Baht**	

DRAFT

INVITATION TO BID NO. IETS-LPLC-TIEC-NPUP-MC1-01

Schedule A4 : Compression Connector and Miscellaneous Hardware

SUPPLY OF MISCELLANEOUS EQUIPMENT
WORK PLAN TO IMPROVE THE ELECTRICITY SUPPLY MODEL FOR HIGH VOLTAGE SUBSTATION TO ENHANCE THE TRANSMISSION SYSTEM STABILITY AND RELIABILITY

Item No.	Description	Qty.	Unit	**Supply of Equipment** Local Supply Ex-works Price (excluding VAT) Baht	
				Unit Price	Amount
A4-1	Reference : Specification No.605 Strain clamp for 3/8 inch diameter galvanized steel OHG wire ,PLP Cat. No.A3DD4749T or equal (Legend No.12.21)	45			
A4-2	Compression terminal for 1272 MCM ACSR, straight type, four holes NEMA pad without mounting bolt ,PLP Cat. No.A4DD17829T or equal (Legend No.16.45)	200			
A4-3	Compression tee for 1272 MCM ACSR, four holes NEMA pad ,PLP Cat. No.A4DD16883T or equal (Legend No.17.43)	100			
A4-4	Compression dead end for 1272 MCM ACSR, with non-adjustable clevis bolts, nuts and cotter key, four holes NEMA tap pad ,PLP Cat. No.A4DD16227T or equal (Legend No.24.15)	195			
A4-5	Cable clamp for 3/8 inch diameter galvanized steel OHG wire, run to flat surface ,PLP Cat. No.A4DD3792T or equal (Legend No.46.61)	45			

DRAFT

INVITATION TO BID NO. IETS-LPLC-TIEC-NPUP-MC1-01

Schedule A4 : Compression Connector and Miscellaneous Hardware

SUPPLY OF MISCELLANEOUS EQUIPMENT
WORK PLAN TO IMPROVE THE ELECTRICITY SUPPLY MODEL FOR HIGH VOLTAGE SUBSTATION TO ENHANCE THE TRANSMISSION SYSTEM STABILITY AND RELIABILITY

Item No.	Description	Qty.	Unit	**Supply of Equipment** Local Supply Ex-works Price (excluding VAT) Baht	
				Unit Price	Amount
A4-6	Ball clevis 16 mm. ,PLP Cat. No.A4DD08248T or equal (Legend No.80.01)	35			
A4-7	Ball eye 16 mm. ,PLP Cat. No.A4DD1114T or equal (Legend No.80.06)	140			
A4-8	Socket clevis 16 mm. ,PLP Cat. No.A4DD10476T or equal (Legend No.80.11)	55			
A4-9	Socket eye with 19 mm. boss ,PLP Cat. No.A4DD17834T or equal (Legend No.80.16)	70			
A4-10	Socket eye with 16 mm. boss ,PLP Cat. No.A4DD17835T or equal (Legend No.80.17)	25			
A4-11	Twisted clevis tongue 20 mm. ,PLP Cat. No.A4DD17798T or equal (Legend No.80.23)	165			
A4-12	Bow shackle 16 mm. ,PLP Cat. No.A4DD14164T or equal (Legend No.80.31)	150			

DRAFT

INVITATION TO BID NO. IETS-LPLC-TIEC-NPUP-MC1-01

Schedule A4 : Compression Connector and Miscellaneous Hardware

SUPPLY OF MISCELLANEOUS EQUIPMENT
WORK PLAN TO IMPROVE THE ELECTRICITY SUPPLY MODEL FOR HIGH VOLTAGE SUBSTATION TO ENHANCE THE TRANSMISSION SYSTEM STABILITY AND RELIABILITY

Item No.	Description	Qty.	Unit	**Supply of Equipment** Local Supply Ex-works Price (excluding VAT) Baht	
				Unit Price	Amount
A4-13	Turnbuckle clevis-clevis 3/4 x 12 inch size and take up ,PLP Cat. No.A4DD17520T or equal (Legend No.80.36)	40			
A4-14	Turnbuckle clevis-eye 5/8 x 12 inch size and take up ,PLP Cat. No.A4DD17880T or equal (Legend No.80.38)	30			
A4-15	Turnbuckle eye-eye 3/4 x 12 inch size and take up ,PLP Cat. No.A4DD17521T or equal (Legend No.80.39)	35			
A4-16	Strain yoke plate 200 mm. spacing 18 mm. hole ,PLP Cat. No.A4DD10569T or equal (Legend No.80.41)	60			
A4-17	3.5 inch sub-base 5 inch bc on top and bottom ,PLP Cat. No.A4DD17490T or equal (Legend No.80.51)	310			
A4-18	Galvanized steel bolt, M16, 50 mm. long ,EGAT Cat. No.SD-AB-0-01 or equal (Legend No.90.31)	1180			

DRAFT

INVITATION TO BID NO. IETS-LPLC-TIEC-NPUP-MC1-01

Schedule A4 : Compression Connector and Miscellaneous Hardware

SUPPLY OF MISCELLANEOUS EQUIPMENT
WORK PLAN TO IMPROVE THE ELECTRICITY SUPPLY MODEL FOR HIGH VOLTAGE SUBSTATION TO ENHANCE THE TRANSMISSION SYSTEM STABILITY AND RELIABILITY

Item No.	Description	Qty.	Unit	**Supply of Equipment** Local Supply Ex-works Price (excluding VAT) Baht	
				Unit Price	Amount
A4-19	Galvanized steel bolt, M16, 55 mm. long ,EGAT Cat. No.SD-AB-0-01 or equal (Legend No.90.32)	15			
A4-20	Galvanized steel nut for M16 bolt ,EGAT Cat. No.SD-AB-0-01 or equal (Legend No.90.36)	1195			
A4-21	Galvanized steel spring washer for M16 bolt ,EGAT Cat. No.SD-AB-0-01 or equal (Legend No.90.46)	1195			
Total Price for Schedule A4				**Baht**	

DRAFT

INVITATION TO BID NO. IETS-LPLC-TIEC-NPUP-MC1-01

Schedule A5 : 230 kV and below Bus Fitting

SUPPLY OF MISCELLANEOUS EQUIPMENT

WORK PLAN TO IMPROVE THE ELECTRICITY SUPPLY MODEL FOR HIGH VOLTAGE SUBSTATION TO ENHANCE THE TRANSMISSION SYSTEM STABILITY AND RELIABILITY

Item No.	Description	Qty.	Unit	Currency	**Supply of Equipment**				**Supply of Equipment**	
					Foreign Supply				Local Supply	
					FOB Vessel	Cost of Transportation to Thai Port	CFR Thai Port		Ex-works Price (excluding VAT) Baht	
					Unit Price	Unit Price	Unit Price	Amount	Unit Price	Amount
A5-1	Reference : Specification No.605 Tubular bus suspension clamp, ball socket type (ANSI C29.2, type B) for 3 inch IPS aluminum tube ,Burndy Cat. No.CHS20A or equal (Legend No.12.55)	40								
A5-2	Bus support clamp, with 5 inch bc fitting for 1272 MCM ACSR ,Burndy Cat. No.UHKR16A-5B or equal (Legend No.13.45) (Hardware for fixing to base of insulator shall comprise of 5/8 inch-11 UNC bolt and split lockwashers for bolt size 5/8 inch, the length of bolt shall be 35 mm)	15								
A5-3	Bus support clamp, with 3 inch bc fitting for 2x1272 MCM ACSR ,Burndy Cat. No.U2HKR16A-3B or equal (Legend No.13.73) (Hardware for fixing to base of insulator shall comprise of 1/2 inch-13 UNC bolt and split lockwashers, the length of bolt shall be 30 mm)	5								
A5-4	Bus support, with 5 inch bc fitting for 2 inch IPS aluminum tube, slip or rigid fit ,Burndy Cat. No.WOH18A-5B or equal (Legend No.15.43) (Hardware for fixing to base of insulator shall comprise of 5/8 inch-11 UNC bolt and split lockwashers for bolt size 5/8 inch, the length of bolt shall be 35 mm)	45								

DRAFT

INVITATION TO BID NO. IETS-LPLC-TIEC-NPUP-MC1-01

Schedule A5 : 230 kV and below Bus Fitting

SUPPLY OF MISCELLANEOUS EQUIPMENT

WORK PLAN TO IMPROVE THE ELECTRICITY SUPPLY MODEL FOR HIGH VOLTAGE SUBSTATION TO ENHANCE THE TRANSMISSION SYSTEM STABILITY AND RELIABILITY

Item No.	Description	Qty.	Unit	Currency	**Supply of Equipment**				**Supply of Equipment**	
					Foreign Supply				Local Supply	
					FOB Vessel	Cost of Transportation to Thai Port	CFR Thai Port		Ex-works Price (excluding VAT) Baht	
					Unit Price	Unit Price	Unit Price	Amount	Unit Price	Amount
A5-5	Bus support, with 5 inch bc fitting for 3 inch IPS aluminum tube, slip or rigid fit ,Burndy Cat. No.WOH20A-5B or equal (Legend No.15.45) (Hardware for fixing to base of insulator shall comprise of 5/8 inch-11 UNC bolt and split lockwashers for bolt size 5/8 inch, the length of bolt shall be 35 mm)	110								
A5-6	Bus support, with 5 inch bc fitting for 5 inch IPS aluminum tube, slip or rigid fit ,Burndy Cat. No.WOH24A-5B or equal (Legend No.15.47) (Hardware for fixing to base of insulator shall comprise of 5/8 inch-11 UNC bolt and split lockwashers for bolt size 5/8 inch, the length of bolt shall be 35 mm)	130								
A5-7	Expansion bus support coupler, weld type with 5 inch bc fitting for 3 inch IPS Sch.40 aluminum tube, supplied with end cap ,Burndy Cat. No.WXHP20A-5B-SG or equal (Legend No.15.55)	5								
A5-8	Expansion bus support coupler, weld type with 5 inch bc fitting for 5 inch IPS Sch.40 aluminum tube, supplied with end cap ,Burndy Cat. No.WXHP24A-5B-SG5 or equal (Legend No.15.57)	15								
A5-9	Terminal connector, weld type for 4x1272 MCM ACSR (Parallel), six holes ,Burndy Cat. No.W4A54R-6N-SG or equal (Legend No.28.48)	20								

DRAFT

INVITATION TO BID NO. IETS-LPLC-TIEC-NPUP-MC1-01

Schedule A5 : 230 kV and below Bus Fitting

SUPPLY OF MISCELLANEOUS EQUIPMENT

WORK PLAN TO IMPROVE THE ELECTRICITY SUPPLY MODEL FOR HIGH VOLTAGE SUBSTATION TO ENHANCE THE TRANSMISSION SYSTEM STABILITY AND RELIABILITY

Item No.	Description	Qty.	Unit	Currency	**Supply of Equipment**				**Supply of Equipment**	
					Foreign Supply				Local Supply	
					FOB Vessel	Cost of Transportation to Thai Port	CFR Thai Port		Ex-works Price (excluding VAT) Baht	
					Unit Price	Unit Price	Unit Price	Amount	Unit Price	Amount
A5-10	Terminal connector, weld type for 2x1272 MCM ACSR ,Burndy Cat. No.W2A54R-4N or equal (Legend No.28.63)	585								
A5-11	Terminal connector, weld type for 477 MCM ACSR ,Burndy Cat. No.WA41R-4N or equal (Legend No.29.81)	5								
A5-12	Terminal connector, weld type for 1272 MCM ACSR ,Burndy Cat. No.WA54R-4N or equal (Legend No.29.83)	300								
A5-13	Terminal connector, weld type for 2 inch IPS Sch.40 aluminum tube, four holes ,Burndy Cat. No.SWAC18A-34N or equal (Legend No.30.03)	20								
A5-14	Terminal connector, weld type for 3 inch IPS Sch.40 aluminum tube, four holes ,Burndy Cat. No.SWAC20A-34N-SG or equal (Legend No.30.05)	160								
A5-15	Terminal connector, weld type for 5 inch IPS Sch.40 aluminum tube, four holes ,Burndy Cat. No.SWAC24A-44N or equal (Legend No.30.07)	50								
A5-16	Expansion terminal connector, weld type for 3 inch IPS Sch.40 aluminum tube, four holes ,Burndy Cat. No.WXA20A-4N-SG4 or equal (Legend No.30.15)	55								
A5-17	Connector angle " T ", weld type for 2 inch IPS aluminum tube run to 80 degree 2 inch IPS aluminum tube tap ,Burndy Cat. No.SWT18A18A-80 or equal (Legend No.39.07)	35								

DRAFT

INVITATION TO BID NO. IETS-LPLC-TIEC-NPUP-MC1-01

Schedule A5 : 230 kV and below Bus Fitting

SUPPLY OF MISCELLANEOUS EQUIPMENT

WORK PLAN TO IMPROVE THE ELECTRICITY SUPPLY MODEL FOR HIGH VOLTAGE SUBSTATION TO ENHANCE THE TRANSMISSION SYSTEM STABILITY AND RELIABILITY

Item No.	Description	Qty.	Unit	Currency	**Supply of Equipment**				**Supply of Equipment**	
					Foreign Supply				Local Supply	
					FOB Vessel	Cost of Transportation to Thai Port	CFR Thai Port		Ex-works Price (excluding VAT) Baht	
					Unit Price	Unit Price	Unit Price	Amount	Unit Price	Amount
A5-18	Connector angle " T ", weld type for 3 inch IPS aluminum tube run to 80 degree 3 inch IPS aluminum tube tap ,Burndy Cat. No.SWT20A20A-80 or equal (Legend No.39.29)	115								
A5-19	Connector angle " T ", weld type for 5 inch IPS aluminum tube run to 80 degree 3 inch IPS aluminum tube tap ,Burndy Cat. No.SWT24A20A-80 or equal (Legend No.39.48)	60								
A5-20	Connector " V ", weld type for 2 inch IPS aluminum tube run to 20 degree 2 inch IPS aluminum tube tap ,Burndy Cat. No.SWAT18A18A-20 or equal (Legend No.41.13)	5								
A5-21	Connector " V ", weld type for 3 inch IPS aluminum tube run to 20 degree 2 inch IPS aluminum tube tap ,Burndy Cat. No.SWAT20A18A-20 or equal (Legend No.41.32)	15								
A5-22	Connector " V ", weld type for 3 inch IPS aluminum tube run to 20 degree 3 inch IPS aluminum tube tap ,Burndy Cat. No.SWAT20A20A-20 or equal (Legend No.41.34)	35								
A5-23	Connector " V ", weld type for 5 inch IPS aluminum tube run to 20 degree 3 inch IPS aluminum tube tap ,Burndy Cat. No.SWAT24A20A-20 or equal (Legend No.41.53)	80								

DRAFT

INVITATION TO BID NO. IETS-LPLC-TIEC-NPUP-MC1-01

Schedule A5 : 230 kV and below Bus Fitting

SUPPLY OF MISCELLANEOUS EQUIPMENT

WORK PLAN TO IMPROVE THE ELECTRICITY SUPPLY MODEL FOR HIGH VOLTAGE SUBSTATION TO ENHANCE THE TRANSMISSION SYSTEM STABILITY AND RELIABILITY

Item No.	Description	Qty.	Unit	Currency	**Supply of Equipment**				**Supply of Equipment**	
					Foreign Supply				Local Supply	
					FOB Vessel	Cost of Transportation to Thai Port	CFR Thai Port		Ex-works Price (excluding VAT) Baht	
					Unit Price	Unit Price	Unit Price	Amount	Unit Price	Amount
A5-24	Bar tap, weld type for 3 inch IPS aluminum tube to four holes NEMA pad ,Burndy Cat. No.SWAB20A-4N or equal (Legend No.42.04)	105								
A5-25	Bar tap, weld type for 5 inch IPS aluminum tube to four holes NEMA pad ,Burndy Cat. No.SWAB24A-4N or equal (Legend No.42.06)	30								
A5-26	Coupler, weld type for 2 inch IPS Sch.40 aluminum tube ,Burndy Cat. No.WS18A-F or equal (Legend No.44.02)	45								
A5-27	Coupler, weld type for 3 inch IPS Sch.40 aluminum tube ,Burndy Cat. No.WS20A-F or equal (Legend No.44.04)	155								
A5-28	Coupler, weld type for 5 inch IPS Sch.40 aluminum tube ,Burndy Cat. No.WS24A-F or equal (Legend No.44.06)	205								
A5-29	Corona bell, internal type for 2 inch IPS Sch.40 aluminum tube ,Burndy Cat. No.LB18A or equal (Legend No.45.54)	20								
A5-30	Corona bell, internal type for 3 inch IPS Sch.40 aluminum tube ,Burndy Cat. No.LB20A or equal (Legend No.45.56)	75								
A5-31	Corona bell, internal type for 5 inch IPS Sch.40 aluminum tube ,Burndy Cat. No.LB24A or equal (Legend No.45.58)	50								

DRAFT

INVITATION TO BID NO. IETS-LPLC-TIEC-NPUP-MC1-01

Schedule A5 : 230 kV and below Bus Fitting

SUPPLY OF MISCELLANEOUS EQUIPMENT

WORK PLAN TO IMPROVE THE ELECTRICITY SUPPLY MODEL FOR HIGH VOLTAGE SUBSTATION TO ENHANCE THE TRANSMISSION SYSTEM STABILITY AND RELIABILITY

Item No.	Description	Qty.	Unit	Currency	**Supply of Equipment**				**Supply of Equipment**	
					Foreign Supply				Local Supply	
					FOB Vessel	Cost of Transportation to Thai Port	CFR Thai Port		Ex-works Price (excluding VAT) Baht	
					Unit Price	Unit Price	Unit Price	Amount	Unit Price	Amount
A5-32	Spacer connector for 2x1272 MCM ACSR, distance between conductor center 100 mm. ,Burndy Cat. No.S2GBP46A-10 or equal (Legend No.47.05)	300								
A5-33	Spacer connector for 2x1272 MCM ACSR, distance between conductor center 200 mm. ,Burndy Cat. No.S2GBP46A-20 or equal (Legend No.47.15)	60								
A5-34	Spacer connector for 4x1272 MCM ACSR (Parallel), distance between conductor center 100 mm. ,Burndy Cat. No.N4P46A-SG or equal (Legend No.47.21)	10								
A5-35	Stainless steel hexagon head bolts, 0.5-13 inch, 2.5 inch long fully threaded and manufactures of series 18-8 material, coarse thread series class 2A tolerance ,Burndy Cat. No.50x250 HSSB or equal (Legend No.90.51)	1855								
A5-36	Stainless steel hexagon head bolts, 0.5-13 inch, 3.5 inch long fully threaded and manufactures of series 18-8 material, coarse thread series class 2A tolerance ,Burndy Cat. No.50x350 HSSB or equal (Legend No.90.52)	805								
A5-37	Stainless steel hexagon head bolts, 0.5-13 inch, 3.0 inch long fully threaded and manufactures of series 18-8 material, coarse thread series class 2A tolerance ,Burndy Cat. No.50x300 HSSB or equal (Legend No.90.54)	2170								

DRAFT

INVITATION TO BID NO. IETS-LPLC-TIEC-NPUP-MC1-01

Schedule A5 : 230 kV and below Bus Fitting

SUPPLY OF MISCELLANEOUS EQUIPMENT

WORK PLAN TO IMPROVE THE ELECTRICITY SUPPLY MODEL FOR HIGH VOLTAGE SUBSTATION TO ENHANCE THE TRANSMISSION SYSTEM STABILITY AND RELIABILITY

Item No.	Description	Qty.	Unit	Currency	**Supply of Equipment**				**Supply of Equipment**	
					Foreign Supply				Local Supply	
					FOB Vessel	Cost of Transportation to Thai Port	CFR Thai Port		Ex-works Price (excluding VAT) Baht	
					Unit Price	Unit Price	Unit Price	Amount	Unit Price	Amount
A5-38	Stainless steel hexagon nuts manufactures of series 18-8 material finish type, coarse thread series class 2B fit for 0.5-13 inch bolts size ,Burndy Cat. No.50 HSSN or equal (Legend No.90.61)	4795								
A5-39	Stainless steel flat washers manufactures of 18-8 material and of medium design 1.125 inch O.D., 0.594 inch I.D., and 0.125 inch thickness ,Burndy Cat. No.50 FWSS or equal (Legend No.90.66)	9575								
A5-40	Stainless steel belleville washers manufactures of alloy 301, 302 or 18-8 materials, 1.06 inch O.D., 0.530 inch I.D., 0.095 inch thickness ,Burndy Cat. No.50x106 BWSS or equal (Legend No.90.76)	4795								
A5-41	Aluminum joint compound in 8-oz bottles ,Burndy Cat. No.P8A or equal (Legend No.90.91)	150								
Total Price for Schedule A5									**Baht**	

DRAFT

INVITATION TO BID NO. IETS-LPLC-TIEC-NPUP-MC1-01

Schedule A6 : Grounding Material

SUPPLY OF MISCELLANEOUS EQUIPMENT

WORK PLAN TO IMPROVE THE ELECTRICITY SUPPLY MODEL FOR HIGH VOLTAGE SUBSTATION TO ENHANCE THE TRANSMISSION SYSTEM STABILITY AND RELIABILITY

Item No.	Description	Qty.	Unit	Currency	**Supply of Equipment**				**Supply of Equipment**	
					Foreign Supply				Local Supply	
					FOB Vessel	Cost of Transportation to Thai Port	CFR Thai Port		Ex-works Price (excluding VAT) Baht	
					Unit Price	Unit Price	Unit Price	Amount	Unit Price	Amount
A6-1	Reference : Specification No. 603 Ground rod size 5/8 inch diameter x 10 feet	66								
A6-2	Exothermic welding mold for connecting copper weld ground rod size 5/8 inch diameter to copper ground wire no. 4/0 AWG ,Kumwell Cat. No.CR2-C-5/84/0 or equal (Legend No.60.02)	3			XXXXX	XXXXX	XXXXX	XXXXX		
A6-3	Exothermic welding mold for connecting horizontal cable of no. 4/0 AWG run to horizontal through cable of no. 4/0 AWG copper ground wire tap ,Kumwell Cat. No.CC2-C-4/04/0 or equal (Legend No.60.03)	55			XXXXX	XXXXX	XXXXX	XXXXX		
A6-4	Exothermic welding mold for connecting angular cable drop of no. 4/0 AWG copper ground wire to vertical steel flat surface ,Kumwell Cat. No.CS3-Y-4/0 or equal (Legend No.60.04)	29			XXXXX	XXXXX	XXXXX	XXXXX		
A6-5	Exothermic welding mold for connecting angular cable drop of no. 4/0 AWG copper ground wire to vertical steel pipe 2-4 inch diameter ,Kumwell Cat. No.CP1-X-4/0 or equal (Legend No.60.05)	3			XXXXX	XXXXX	XXXXX	XXXXX		
A6-6	Exothermic welding mold for connecting horizontal to horizontal cable cross of no. 4/0 AWG copper ground wire tap cable, cut cable in same plane ,Kumwell Cat. No.CC4-C-4/04/0 or equal (Legend No.60.06)	2			XXXXX	XXXXX	XXXXX	XXXXX		

DRAFT

INVITATION TO BID NO. IETS-LPLC-TIEC-NPUP-MC1-01

Schedule A6 : Grounding Material

SUPPLY OF MISCELLANEOUS EQUIPMENT

WORK PLAN TO IMPROVE THE ELECTRICITY SUPPLY MODEL FOR HIGH VOLTAGE SUBSTATION TO ENHANCE THE TRANSMISSION SYSTEM STABILITY AND RELIABILITY

Item No.	Description	Qty.	Unit	Currency	**Supply of Equipment**				**Supply of Equipment**	
					Foreign Supply				Local Supply	
					FOB Vessel	Cost of Transportation to Thai Port	CFR Thai Port		Ex-works Price (excluding VAT) Baht	
					Unit Price	Unit Price	Unit Price	Amount	Unit Price	Amount
A6-7	Exothermic welding mold for connecting cable of no. 4/0 AWG copper ground wire vertical through to steel flat surface ,Kumwell Cat. No.CS4-Y-4/0 or equal (Legend No.60.07)	62			XXXXX	XXXXX	XXXXX	XXXXX		
A6-8	Changeable handle clamp ,Kumwell Cat. No.HCC00-XY or equal (Legend No.60.09)	16			XXXXX	XXXXX	XXXXX	XXXXX		
A6-9	Welding powder cartridges for mold ,Kumwell Cat. No.CR2-C-5/84/0 or equal (Legend No.60.10)	7			XXXXX	XXXXX	XXXXX	XXXXX		
A6-10	Welding powder cartridges for mold ,Kumwell Cat. No.CC2-C-4/04/0 or equal (Legend No.60.11)	1547			XXXXX	XXXXX	XXXXX	XXXXX		
A6-11	Welding powder cartridges for mold ,Kumwell Cat. No.CS3-Y-4/0 or equal (Legend No.60.12)	774			XXXXX	XXXXX	XXXXX	XXXXX		
A6-12	Welding powder cartridges for mold ,Kumwell Cat. No.CP1-X-4/0 or equal (Legend No.60.13)	52			XXXXX	XXXXX	XXXXX	XXXXX		
A6-13	Welding powder cartridges for mold ,Kumwell Cat. No.CC4-C-4/04/0 or equal (Legend No.60.14)	31			XXXXX	XXXXX	XXXXX	XXXXX		
A6-14	Welding powder cartridges for mold ,Kumwell Cat. No.CS4-Y-4/0 or equal (Legend No.60.15)	1788			XXXXX	XXXXX	XXXXX	XXXXX		

DRAFT

INVITATION TO BID NO. IETS-LPLC-TIEC-NPUP-MC1-01

Schedule A6 : Grounding Material

SUPPLY OF MISCELLANEOUS EQUIPMENT

WORK PLAN TO IMPROVE THE ELECTRICITY SUPPLY MODEL FOR HIGH VOLTAGE SUBSTATION TO ENHANCE THE TRANSMISSION SYSTEM STABILITY AND RELIABILITY

Item No.	Description	Qty.	Unit	Currency	**Supply of Equipment**				**Supply of Equipment**	
					Foreign Supply				Local Supply	
					FOB Vessel	Cost of Transportation to Thai Port	CFR Thai Port		Ex-works Price (excluding VAT) Baht	
					Unit Price	Unit Price	Unit Price	Amount	Unit Price	Amount
A6-15	Tool kit complete set ,Kumwell Cat. No.KTA000 or equal (Legend No.60.17)	13			XXXXX	XXXXX	XXXXX	XXXXX		
A6-16	Flint igniter ,Kumwell Cat. No.KTA014U or equal (Legend No.60.18)	170			XXXXX	XXXXX	XXXXX	XXXXX		
A6-17	Single terminal lug one hole for 4/0 AWG copper ground wire ,Kumwell Cat. No.KGXTEL-4/0 or equal (Legend No.60.19)	6								
A6-18	Ground connector for 2x4/0 AWG copper ground wire to steel flat surface ,Kumwell Cat. No.GXCCP-G2P or equal (Legend No.60.20d)	87								
A6-19	Flexible copper braid, 14 inch long, 600 A ,Kumwell Cat. No.KGZFCB 39533 or equal	2								
Total Price for Schedule A6									**Baht**	

DRAFT

INVITATION TO BID NO. IETS-LPLC-TIEC-NPUP-MC1-01

Schedule B1 : Aluminum Tube

SUPPLY OF MISCELLANEOUS EQUIPMENT

LONG-TERM INVESTMENT PLAN TO ACCOMMODATE LARGE POWER CONSUMER

Item No.	Description	Qty.	Unit	**Supply of Equipment** Local Supply Ex-works Price (excluding VAT) Baht	
				Unit Price	Amount
	Reference : Specification No.605				
B1-1	Aluminum tube 3.0" IPS Sch.40, 6 meters long	15			
B1-2	Aluminum tube 5.0" IPS Sch.80, 6 meters long	90			
B1-3	Aluminum tube 3.0" IPS Sch.80, 6 meters long	30			
Total Price for Schedule B1				**Baht**	

DRAFT

INVITATION TO BID NO. IETS-LPLC-TIEC-NPUP-MC1-01

Schedule B2 : Compression Connector and Miscellaneous Hardware

SUPPLY OF MISCELLANEOUS EQUIPMENT

LONG-TERM INVESTMENT PLAN TO ACCOMMODATE LARGE POWER CONSUMER

Item No.	Description	Qty.	Unit	**Supply of Equipment** Local Supply Ex-works Price (excluding VAT) Baht	
				Unit Price	Amount
B2-1	Reference : Specification No.605 Aluminum alloy straight compression terminal for 1272 MCM ACSR, four holes NEMA pad ,Lorunser Cat. No.771.059.9 or equal (Legend No.16.45A). In addition, each compression terminal shall be furnished with the following accessories : - Stainless steel bolts, nuts, flat washers and belleville washers - Aluminum alloy streamlined cap for shielding hardware when bolting terminal to flat pad	40			
B2-2	Aluminum alloy quadruple bundle suspension coupler, complete with straight compression terminals for 4x1272 MCM ACSR, bolts, nuts and washers ,Lorunser Cat. No.1FB767-133 or equal (Legend No.17.55A)	10			
B2-3	Strain clamp for 3/8 inch diameter galvanized steel OHG wire ,PLP Cat. No.A3DD4749T or equal (Legend No.12.21)	25			

DRAFT

INVITATION TO BID NO. IETS-LPLC-TIEC-NPUP-MC1-01

Schedule B2 : Compression Connector and Miscellaneous Hardware

SUPPLY OF MISCELLANEOUS EQUIPMENT

LONG-TERM INVESTMENT PLAN TO ACCOMMODATE LARGE POWER CONSUMER

Item No.	Description	Qty.	Unit	**Supply of Equipment** Local Supply Ex-works Price (excluding VAT) Baht	
				Unit Price	Amount
B2-4	Compression terminal for 1272 MCM ACSR, angle 15 degree type, four holes NEMA pad without mounting bolt ,PLP Cat. No.A4DD16931T or equal (Legend No.16.49)	30			
B2-5	Compression tee for 1272 MCM ACSR, four holes NEMA pad ,PLP Cat. No.A4DD16883T or equal (Legend No.17.43)	10			
B2-6	Double T connector for 1272 MCM ACSR, four holes NEMA pad ,PLP Cat. No.A4DD17836T or equal (Legend No.17.55)	15			
B2-7	Compression dead end tension clamp for 1272 MCM ACSR, with non-adjustable clevis bolts, nuts and cotter key ,PLP Cat. No.A4DD08740T or equal (Legend No.24.45)	30			
B2-8	Cable clamp for 3/8 inch diameter galvanized steel OHG wire, run to flat surface ,PLP Cat. No.A4DD3792T or equal (Legend No.46.61)	30			
B2-9	Ball eye 16 mm. ,PLP Cat. No.A4DD1114T or equal (Legend No.80.06)	20			

DRAFT

INVITATION TO BID NO. IETS-LPLC-TIEC-NPUP-MC1-01

Schedule B2 : Compression Connector and Miscellaneous Hardware

SUPPLY OF MISCELLANEOUS EQUIPMENT

LONG-TERM INVESTMENT PLAN TO ACCOMMODATE LARGE POWER CONSUMER

Item No.	Description	Qty.	Unit	**Supply of Equipment** Local Supply Ex-works Price (excluding VAT) Baht	
				Unit Price	Amount
B2-10	Socket clevis 16 mm. ,PLP Cat. No.A4DD10476T or equal (Legend No.80.11)	10			
B2-11	Socket eye with 16 mm. boss ,PLP Cat. No.A4DD17835T or equal (Legend No.80.17)	15			
B2-12	Twisted clevis tongue 20 mm. ,PLP Cat. No.A4DD17798T or equal (Legend No.80.23)	15			
B2-13	Twisted clevis tongue 16 mm. ,PLP Cat. No.A4DD17730T or equal (Legend No.80.26)	15			
B2-14	Bow shackle 16 mm. ,PLP Cat. No.A4DD14164T or equal (Legend No.80.31)	85			
B2-15	Turnbuckle clevis-eye 5/8 x 12 inch size and take up ,PLP Cat. No.A4DD17880T or equal (Legend No.80.38)	25			
B2-16	Strain yoke plate 200 mm. spacing 18 mm. hole ,PLP Cat. No.A4DD10569T or equal (Legend No.80.41)	20			

DRAFT

INVITATION TO BID NO. IETS-LPLC-TIEC-NPUP-MC1-01

Schedule B2 : Compression Connector and Miscellaneous Hardware

SUPPLY OF MISCELLANEOUS EQUIPMENT

LONG-TERM INVESTMENT PLAN TO ACCOMMODATE LARGE POWER CONSUMER

Item No.	Description	Qty.	Unit	**Supply of Equipment** Local Supply Ex-works Price (excluding VAT) Baht	
				Unit Price	Amount
B2-17	3.5 inch sub-base 5 inch bc on top and bottom ,PLP Cat. No.A4DD17490T or equal (Legend No.80.51)	10			
B2-18	6.0 inch sub-base 3 inch bc on top and bottom ,PLP Cat. No.A4DD17643T or equal (Legend No.80.52)	20			
B2-19	Plate link 19 mm. ,PLP Cat. No.A4DD17828T or equal (Legend No.80.60)	15			
B2-20	U-bolt 20 mm. completed with nuts and washers ,PLP Cat. No.A4DD10547T or equal (Legend No.XX.XX)	10			
B2-21	Galvanized steel bolt, M16, 50 mm. long ,EGAT Cat. No.SD-AB-0-01 or equal (Legend No.90.31)	15			
B2-22	Galvanized steel bolt, M16, 55 mm. long ,EGAT Cat. No.SD-AB-0-01 or equal (Legend No.90.32)	15			

DRAFT

INVITATION TO BID NO. IETS-LPLC-TIEC-NPUP-MC1-01

Schedule B2 : Compression Connector and Miscellaneous Hardware

SUPPLY OF MISCELLANEOUS EQUIPMENT

LONG-TERM INVESTMENT PLAN TO ACCOMMODATE LARGE POWER CONSUMER

Item No.	Description	Qty.	Unit	**Supply of Equipment** Local Supply Ex-works Price (excluding VAT) Baht	
				Unit Price	Amount
B2-23	Galvanized steel nut for M16 bolt ,EGAT Cat. No.SD-AB-0-01 or equal (Legend No.90.36)	30			
B2-24	Galvanized steel spring washer for M16 bolt ,EGAT Cat. No.SD-AB-0-01 or equal (Legend No.90.46)	30			
Total Price for Schedule B2				**Baht**	

DRAFT

INVITATION TO BID NO. IETS-LPLC-TIEC-NPUP-MC1-01

Schedule B3 : 500 kV Bus Fitting

SUPPLY OF MISCELLANEOUS EQUIPMENT

LONG-TERM INVESTMENT PLAN TO ACCOMMODATE LARGE POWER CONSUMER

Item No.	Description	Qty.	Unit	Currency	**Supply of Equipment**				**Supply of Equipment**	
					Foreign Supply				Local Supply	
					FOB Vessel	Cost of Transportation to Thai Port	CFR Thai Port		Ex-works Price (excluding VAT) Baht	
					Unit Price	Unit Price	Unit Price	Amount	Unit Price	Amount
B3-1	Reference : Specification No.605 Aluminum alloy quadruple bus support clamp, with 5 inch bc fitting for 4x1272 MCM ACSR ,SubCon Cat. No.BA07343 or equal (Legend No.13.98A)	5								
B3-2	Bus support, with 5 inch bc fitting for 5 inch IPS aluminum tube, slip or rigid fit ,Lorunser Cat. No.1JB008-140 or equal (Legend No.15.47A)	35								
B3-3	Expansion bus support coupler, weld type with 5 inch bc fitting for 5 inch IPS Sch.80 aluminum tube, supplied with end cap ,Lorunser Cat. No.1KA100-141 or equal (Legend No.15.57A)	5								
B3-4	Bus support, with 5 inch bc fitting for 5 inch IPS aluminum tube, rigid fit ,Lorunser Cat. No.1JJ821-141 or equal (Legend No.15.87A)	5								
B3-5	Aluminum alloy quadruple bundle connector with six holes NEMA pad, complete with straight compression terminals for 4x1272 MCM ACSR, bolts, nuts and washers ,Lorunser Cat. No.3-19019/1E or equal (Legend No.28.93A). In addition, aluminum alloy streamlined cap for shielding hardware when bolting terminal to flat pad shall be provided.	75								

DRAFT

INVITATION TO BID NO. IETS-LPLC-TIEC-NPUP-MC1-01

Schedule B3 : 500 kV Bus Fitting

SUPPLY OF MISCELLANEOUS EQUIPMENT

LONG-TERM INVESTMENT PLAN TO ACCOMMODATE LARGE POWER CONSUMER

Item No.	Description	Qty.	Unit	Currency	**Supply of Equipment**				**Supply of Equipment**	
					Foreign Supply				Local Supply	
					FOB Vessel	Cost of Transportation to Thai Port	CFR Thai Port		Ex-works Price (excluding VAT) Baht	
					Unit Price	Unit Price	Unit Price	Amount	Unit Price	Amount
B3-6	Aluminum alloy quadruple bundle connector with six holes NEMA pad, complete with terminal for 4x1272 MCM ACSR, bolts, nuts and washers ,Lorunser Cat. No.3-19019/1B or equal (Legend No.28.95A). In addition, aluminum alloy streamlined cap for shielding hardware when bolting terminal to flat pad shall be provided.	5								
B3-7	Aluminum alloy quadruple bundle connector with six holes NEMA pad, complete with clamp for 4x1272 MCM ACSR (through conductor), bolts, nuts and washers ,Lorunser Cat. No.3-19019/2E or equal (Legend No.28.96A)	20								
B3-8	Aluminum alloy quadruple bundle connector for stud terminal, complete with terminal for 4x1272 MCM ACSR, bolts, nuts and washers ,Lorunser Cat. No.3-19019/3 or equal (Legend No.28.99A)	5								
B3-9	Terminal connector, weld type for 5 inch IPS Sch.80 aluminum tube, six holes NEMA pad included with corona bell end cap external type(EHV) ,Lorunser Cat. No.1CA081-143 or equal (Legend No.30.87A)	10								

DRAFT

INVITATION TO BID NO. IETS-LPLC-TIEC-NPUP-MC1-01

Schedule B3 : 500 kV Bus Fitting

SUPPLY OF MISCELLANEOUS EQUIPMENT

LONG-TERM INVESTMENT PLAN TO ACCOMMODATE LARGE POWER CONSUMER

Item No.	Description	Qty.	Unit	Currency	**Supply of Equipment**				**Supply of Equipment**	
					Foreign Supply				Local Supply	
					FOB Vessel	Cost of Transportation to Thai Port	CFR Thai Port		Ex-works Price (excluding VAT) Baht	
					Unit Price	Unit Price	Unit Price	Amount	Unit Price	Amount
B3-10	Connector angle " T ", weld type for 5 inch IPS aluminum tube run to 80 degree 3 inch IPS aluminum tube tap (EHV) ,RIBE Cat. No.BA04353 or equal (Legend No.39.48A)	20								
B3-11	Connector " V ", weld type for 5 inch IPS aluminum tube run to 20 degree 3 inch IPS aluminum tube tap (EHV) ,RIBE Cat. No.BA04356 or equal (Legend No.41.53A)	10								
B3-12	Corona bell, external type for 5 inch IPS aluminum tube ,Lorunser Cat. No.1RB100-090 or equal (Legend No.45.93A) (This item shall be used together with legend no. 30.87A)	25								
B3-13	Spacer connector for 2x1272 MCM ACSR, distance between conductor center 200 mm. ,Lorunser Cat. No.1QA102-040 or equal (Legend No.47.15A)	10								
B3-14	Spacer connector for 4x1272 MCM ACSR (Square), distance between conductor center 200 mm. ,RIBE Cat. No.Q4K-203 or equal (Legend No.47.22A)	60								

DRAFT

INVITATION TO BID NO. IETS-LPLC-TIEC-NPUP-MC1-01

Schedule B3 : 500 kV Bus Fitting

SUPPLY OF MISCELLANEOUS EQUIPMENT

LONG-TERM INVESTMENT PLAN TO ACCOMMODATE LARGE POWER CONSUMER

Item No.	Description	Qty.	Unit	Currency	**Supply of Equipment**				**Supply of Equipment**	
					Foreign Supply				Local Supply	
					FOB Vessel	Cost of Transportation to Thai Port	CFR Thai Port		Ex-works Price (excluding VAT) Baht	
					Unit Price	Unit Price	Unit Price	Amount	Unit Price	Amount
B3-15	Aluminum alloy portable earth connector for 5 inch IPS aluminum tube ,Lorunser Cat. No.1DG010-163 or equal (Legend No.48.04A)	10								
B3-16	Aluminum alloy portable earth connector for 4x 1272 MCM ACSR (EHV) ,Lorunser Cat. No.1HG407-041 or equal (Legend No.49.56A)	30								
Total Price for Schedule B3									**Baht**	

DRAFT

INVITATION TO BID NO. IETS-LPLC-TIEC-NPUP-MC1-01

Schedule B4 : 230 kV and below Bus Fitting

SUPPLY OF MISCELLANEOUS EQUIPMENT

LONG-TERM INVESTMENT PLAN TO ACCOMMODATE LARGE POWER CONSUMER

Item No.	Description	Qty.	Unit	Currency	**Supply of Equipment**				**Supply of Equipment**	
					Foreign Supply				Local Supply	
					FOB Vessel	Cost of Transportation to Thai Port	CFR Thai Port		Ex-works Price (excluding VAT) Baht	
					Unit Price	Unit Price	Unit Price	Amount	Unit Price	Amount
B4-1	Reference : Specification No.605 Bus support clamp, with 5 inch bc fitting for 2x1272 MCM ACSR ,Burndy Cat. No.U2HKR16A-5B or equal (Legend No.13.68) (Hardware for fixing to base of insulator shall comprise of 5/8 inch-11 UNC bolt and split lockwashers for bolt size 5/8 inch, the length of bolt shall be 35 mm)	5								
B4-2	Bus support clamp, with 5 inch bc fitting for 4x1272 MCM AAC or ACSR (Parallel) ,Burndy Cat. No.U4HKR16A-5-SG or equal (Legend No.13.98)	5								
B4-3	Bus support clamp, with 3 inch bc fitting for 3 inch IPS aluminum tube, slip or rigid fit ,Burndy Cat. No.UHG20A-3B or equal (Legend No.15.25) (Hardware for fixing to base of insulator shall comprise of 1/2 inch-13 UNC bolt and split lockwashers, the length of bolt shall be 30 mm)	20								
B4-4	Expansion bus support clamp, bolt type with 3 inch bc fitting for 3 inch IPS Sch.80 aluminum tube, supplied with end cap ,Lorunser Cat. No.1KA510-090 or equal (Legend No.15.35)	5								
B4-5	Terminal connector, weld type for 1272 MCM ACSR ,Burndy Cat. No.WA54R-4N or equal (Legend No.29.83)	40								
B4-6	Bar tap, weld type for 3 inch IPS aluminum tube to four holes NEMA pad ,Burndy Cat. No.SWAB20A-4N or equal (Legend No.42.04)	40								

DRAFT

INVITATION TO BID NO. IETS-LPLC-TIEC-NPUP-MC1-01

Schedule B4 : 230 kV and below Bus Fitting

SUPPLY OF MISCELLANEOUS EQUIPMENT

LONG-TERM INVESTMENT PLAN TO ACCOMMODATE LARGE POWER CONSUMER

Item No.	Description	Qty.	Unit	Currency	**Supply of Equipment**				**Supply of Equipment**	
					Foreign Supply				Local Supply	
					FOB Vessel	Cost of Transportation to Thai Port	CFR Thai Port		Ex-works Price (excluding VAT) Baht	
					Unit Price	Unit Price	Unit Price	Amount	Unit Price	Amount
B4-7	Coupler, weld type for 5 inch IPS Sch.80 aluminum tube ,Burndy Cat. No.WS94A-F or equal (Legend No.44.08)	90								
B4-8	Coupler, bolt type for 3 inch IPS aluminum tube ,Lorunser Cat. No.1AA100-090 or equal (Legend No.43.54)	15								
B4-9	Corona bell, internal type for 3 inch IPS Sch.40 aluminum tube ,Burndy Cat. No.LB20A or equal (Legend No.45.56)	15								
B4-10	Stainless steel hexagon head bolts, 0.5-13 inch, 2.5 inch long fully threaded and manufactures of series 18-8 material, coarse thread series class 2A tolerance ,Burndy Cat. No.50x250 HSSB or equal (Legend No.90.51)	200								
B4-11	Stainless steel hexagon head bolts, 0.5-13 inch, 3.5 inch long fully threaded and manufactures of series 18-8 material, coarse thread series class 2A tolerance ,Burndy Cat. No.50x350 HSSB or equal (Legend	895								
B4-12	Stainless steel hexagon nuts manufactures of series 18-8 material finish type, coarse thread series class 2B fit for 0.5-13 inch bolts size ,Burndy Cat. No.50 HSSN or equal (Legend No.90.61)	1090								
B4-13	Stainless steel flat washers manufactures of 18-8 material and of medium design 1.125 inch O.D., 0.594 inch I.D., and 0.125 inch thickness ,Burndy Cat. No.50 FWSS or equal (Legend No.90.66)	1785								

DRAFT

INVITATION TO BID NO. IETS-LPLC-TIEC-NPUP-MC1-01

Schedule B4 : 230 kV and below Bus Fitting

SUPPLY OF MISCELLANEOUS EQUIPMENT

LONG-TERM INVESTMENT PLAN TO ACCOMMODATE LARGE POWER CONSUMER

Item No.	Description	Qty.	Unit	Currency	**Supply of Equipment**				**Supply of Equipment**	
					Foreign Supply				Local Supply	
					FOB Vessel	Cost of Transportation to Thai Port	CFR Thai Port		Ex-works Price (excluding VAT) Baht	
					Unit Price	Unit Price	Unit Price	Amount	Unit Price	Amount
B4-14	Stainless steel belleville washers manufactures of alloy 301, 302 or 18-8 materials, 1.06 inch O.D., 0.530 inch I.D., 0.095 inch thickness ,Burndy Cat. No.50x106 BWSS or equal (Legend No.90.76)	1090								
B4-15	Aluminum joint compound in 8-oz bottles ,Burndy Cat. No.P8A or equal (Legend No.90.91)	110								
B4-16	Corona ring ,Lorunser Cat. No.1TZ010-127 or equal (Legend No.90.15)	40								
Total Price for Schedule B4									**Baht**	

DRAFT

INVITATION TO BID NO. IETS-LPLC-TIEC-NPUP-MC1-01

Schedule B5 : Grounding Material

SUPPLY OF MISCELLANEOUS EQUIPMENT

LONG-TERM INVESTMENT PLAN TO ACCOMMODATE LARGE POWER CONSUMER

Item No.	Description	Qty.	Unit	Currency	**Supply of Equipment**				**Supply of Equipment**	
					Foreign Supply				Local Supply	
					FOB Vessel	Cost of Transportation to Thai Port	CFR Thai Port		Ex-works Price (excluding VAT) Baht	
					Unit Price	Unit Price	Unit Price	Amount	Unit Price	Amount
B5-1	Reference : Specification No.603 Exothermic welding mold for connecting horizontal cable of no. 4/0 AWG run to horizontal through cable of no. 4/0 AWG copper ground wire tap ,Kumwell Cat. No.CC2-C-4/04/0 or equal (Legend No.60.03)	22			XXXXX	XXXXX	XXXXX	XXXXX		
B5-2	Exothermic welding mold for connecting angular cable drop of no. 4/0 AWG copper ground wire to vertical steel flat surface ,Kumwell Cat. No.CS3-Y-4/0 or equal (Legend No.60.04)	9			XXXXX	XXXXX	XXXXX	XXXXX		
B5-3	Exothermic welding mold for connecting cable of no. 4/0 AWG copper ground wire vertical through to steel flat surface ,Kumwell Cat. No.CS4-Y-4/0 or equal (Legend No.60.07)	36			XXXXX	XXXXX	XXXXX	XXXXX		
B5-4	Changeable handle clamp ,Kumwell Cat. No.HCC00-XY or equal (Legend No.60.09)	7			XXXXX	XXXXX	XXXXX	XXXXX		
B5-5	Welding powder cartridges for mold ,Kumwell Cat. No.CC2-C-4/04/0 or equal (Legend No.60.11)	635			XXXXX	XXXXX	XXXXX	XXXXX		
B5-6	Welding powder cartridges for mold ,Kumwell Cat. No.CS3-Y-4/0 or equal (Legend No.60.12)	262			XXXXX	XXXXX	XXXXX	XXXXX		
B5-7	Welding powder cartridges for mold ,Kumwell Cat. No.CS4-Y-4/0 or equal (Legend No.60.15)	1065			XXXXX	XXXXX	XXXXX	XXXXX		
B5-8	Tool kit complete set ,Kumwell Cat. No.KTA000 or equal (Legend No.60.17)	4			XXXXX	XXXXX	XXXXX	XXXXX		
B5-9	Flint igniter ,Kumwell Cat. No.KTA014U or equal (Legend No.60.18)	79			XXXXX	XXXXX	XXXXX	XXXXX		

DRAFT

INVITATION TO BID NO. IETS-LPLC-TIEC-NPUP-MC1-01

Schedule B5 : Grounding Material

SUPPLY OF MISCELLANEOUS EQUIPMENT

LONG-TERM INVESTMENT PLAN TO ACCOMMODATE LARGE POWER CONSUMER

Item No.	Description	Qty.	Unit	Currency	**Supply of Equipment**				**Supply of Equipment**	
					Foreign Supply				Local Supply	
					FOB Vessel	Cost of Transportation to Thai Port	CFR Thai Port		Ex-works Price (excluding VAT) Baht	
					Unit Price	Unit Price	Unit Price	Amount	Unit Price	Amount
B5-10	Single terminal lug one hole for 4/0 AWG copper ground wire ,Kumwell Cat. No.KGXTEL-4/0 or equal (Legend No.60.19)	92								
B5-11	Ground connector for 2x4/0 AWG copper ground wire to steel flat surface ,Kumwell Cat. No.GXCCP-G2P or equal (Legend No.60.20d)	3								
B5-12	Cable clamp for 4/0 AWG copper ground wire run to cable trench wall (with expansion bolt) ,Kumwell Cat. No.KGRC-A or equal (Legend No.60.22)	539								
B5-13	Ground safety mat no. 6 AWG solid copper wire size 1.2 x 1.2 m. Spacing 0.15 x 0.15 m. ,Kumwell Cat. No.CC14-C-#6#6 or equal (Legend No.60.23)	20								
B5-14	Compression terminal for 185 sq.mm. copper ground wire, 2 hole NEMA pad ,Kumwell Cat. No.KTH 400-12DN or equal (Legend No.60.52)	4								
Total Price for Schedule B5									**Baht**	

DRAFT

INVITATION TO BID NO. IETS-LPLC-TIEC-NPUP-MC1-01

Schedule B6 : Rigid Steel Conduit

SUPPLY OF MISCELLANEOUS EQUIPMENT

LONG-TERM INVESTMENT PLAN TO ACCOMMODATE LARGE POWER CONSUMER

Item No.	Description	Qty.	Unit	**Supply of Equipment**	
				Local Supply	
				Ex-works Price (excluding VAT) Baht	
				Unit Price	Amount
B6-1	Reference : Specification No. 522 Rigid steel conduit 2.0 inch dia., 3.05 m long	120			
Total Price for Schedule B6				**Baht**	

DRAFT

INVITATION TO BID NO. IETS-LPLC-TIEC-NPUP-MC1-01

Schedule B7 : Conduit Fitting

SUPPLY OF MISCELLANEOUS EQUIPMENT

LONG-TERM INVESTMENT PLAN TO ACCOMMODATE LARGE POWER CONSUMER

Item No.	Description	Qty.	Unit	Currency	**Supply of Equipment**				**Supply of Equipment**	
					Foreign Supply				Local Supply	
					FOB Vessel	Cost of Transportation to Thai Port	CFR Thai Port		Ex-works Price (excluding VAT) Baht	
					Unit Price	Unit Price	Unit Price	Amount	Unit Price	Amount
	Reference : Specification No. 522									
B7-1	Bushing for rigid steel conduit 2.0 inch dia.	265								
B7-2	Lock nut for rigid steel conduit 2.0 inch dia.	265								
B7-3	Coupling for rigid steel conduit 2.0 inch dia.	85								
B7-4	Flexible rain tight conduit 2.0 inch dia., 15 meter/package	25								
B7-5	Connector for flexible rain tight conduit 2.0 inch dia.	170								
B7-6	Conduit pipe clamp for rigid steel conduit 2.0 inch dia.	190								
Total Price for Schedule B7									**Baht**	

DRAFT

INVITATION TO BID NO. IETS-LPLC-TIEC-NPUP-MC1-01

Schedule C1 : Switchyard Lighting Fixture

SUPPLY OF MISCELLANEOUS EQUIPMENT

LONG-TERM INVESTMENT PLAN TO ACCOMMODATE LARGE POWER CONSUMER

Item No.	Description	Qty.	Unit	**Supply of Equipment** Local Supply Ex-works Price (excluding VAT) Baht	
				Unit Price	Amount
C1-1	Reference : Specification No.611 Flood lighting fixture, LED lamp, 10000 lumen, wide-beam, complete with control gear as per Specification attached	9			
C1-2	Tapered galvanized steel lamp post H=5000 mm. complete with 2 A 250 V plug fuse, 20 A 500 V terminal block for accepting 4 sq.mm. of incoming and outgoing cables and anchor bolts as per Dwg. No. ST-LP-0-03 and SD-AB-0-01	6			
Total Price for Schedule C1				**Baht**	

DRAFT

INVITATION TO BID NO. IETS-LPLC-TIEC-NPUP-MC1-01

Schedule C2 : Aluminum Tube

SUPPLY OF MISCELLANEOUS EQUIPMENT

LONG-TERM INVESTMENT PLAN TO ACCOMMODATE LARGE POWER CONSUMER

Item No.	Description	Qty.	Unit	**Supply of Equipment**	
				Local Supply	
				Ex-works Price (excluding VAT) Baht	
				Unit Price	Amount
C2-1	Reference : Specification No.605 Aluminum tube 3.0" IPS Sch.40, 6 meters long	35			
C2-2	Aluminum tube 5.0" IPS Sch.40, 6 meters long	10			
Total Price for Schedule C2				**Baht**	

DRAFT

INVITATION TO BID NO. IETS-LPLC-TIEC-NPUP-MC1-01

Schedule C3 : Compression Connector and Miscellaneous Hardware

SUPPLY OF MISCELLANEOUS EQUIPMENT

LONG-TERM INVESTMENT PLAN TO ACCOMMODATE LARGE POWER CONSUMER

Item No.	Description	Qty.	Unit	**Supply of Equipment** Local Supply Ex-works Price (excluding VAT) Baht	
				Unit Price	Amount
C3-1	Reference : Specification No.605 Strain clamp for 3/8 inch diameter galvanized steel OHG wire ,PLP Cat. No.A3DD4749T or equal (Legend No.12.21)	30			
C3-2	Compression terminal for 1272 MCM ACSR, straight type, four holes NEMA pad without mounting bolt ,PLP Cat. No.A4DD17829T or equal (Legend No.16.45)	75			
C3-3	Compression tee for 1272 MCM ACSR, four holes NEMA pad ,PLP Cat. No.A4DD16883T or equal (Legend No.17.43)	35			
C3-4	Compression dead end for 1272 MCM ACSR, with non-adjustable clevis bolts, nuts and cotter key, four holes NEMA tap pad ,PLP Cat. No.A4DD16227T or equal (Legend No.24.15)	60			
C3-5	Cable clamp for 3/8 inch diameter galvanized steel OHG wire, run to flat surface ,PLP Cat. No.A4DD3792T or equal (Legend No.46.61)	50			

DRAFT

INVITATION TO BID NO. IETS-LPLC-TIEC-NPUP-MC1-01

Schedule C3 : Compression Connector and Miscellaneous Hardware

SUPPLY OF MISCELLANEOUS EQUIPMENT

LONG-TERM INVESTMENT PLAN TO ACCOMMODATE LARGE POWER CONSUMER

Item No.	Description	Qty.	Unit	**Supply of Equipment** Local Supply Ex-works Price (excluding VAT) Baht	
				Unit Price	Amount
C3-6	Ball clevis 16 mm. ,PLP Cat. No.A4DD08248T or equal (Legend No.80.01)	5			
C3-7	Ball eye 16 mm. ,PLP Cat. No.A4DD1114T or equal (Legend No.80.06)	55			
C3-8	Socket clevis 16 mm. ,PLP Cat. No.A4DD10476T or equal (Legend No.80.11)	10			
C3-9	Socket eye with 19 mm. boss ,PLP Cat. No.A4DD17834T or equal (Legend No.80.16)	25			
C3-10	Socket eye with 16 mm. boss ,PLP Cat. No.A4DD17835T or equal (Legend No.80.17)	20			
C3-11	Twisted clevis tongue 20 mm. ,PLP Cat. No.A4DD17798T or equal (Legend No.80.23)	55			
C3-12	Bow shackle 16 mm. ,PLP Cat. No.A4DD14164T or equal (Legend No.80.31)	60			
C3-13	Turnbuckle clevis-clevis 3/4 x 12 inch size and take up ,PLP Cat. No.A4DD17520T or equal (Legend No.80.36)	25			

DRAFT

INVITATION TO BID NO. IETS-LPLC-TIEC-NPUP-MC1-01

Schedule C3 : Compression Connector and Miscellaneous Hardware

SUPPLY OF MISCELLANEOUS EQUIPMENT

LONG-TERM INVESTMENT PLAN TO ACCOMMODATE LARGE POWER CONSUMER

Item No.	Description	Qty.	Unit	**Supply of Equipment** Local Supply Ex-works Price (excluding VAT) Baht	
				Unit Price	Amount
C3-14	Turnbuckle clevis-eye 5/8 x 12 inch size and take up ,PLP Cat. No.A4DD17880T or equal (Legend No.80.38)	20			
C3-15	Turnbuckle eye-eye 3/4 x 12 inch size and take up ,PLP Cat. No.A4DD17521T or equal (Legend No.80.39)	5			
C3-16	Strain yoke plate 200 mm. spacing 18 mm. hole ,PLP Cat. No.A4DD10569T or equal (Legend No.80.41)	10			
C3-17	Strain yoke plate 200 mm. spacing 20.5 mm. hole ,PLP Cat. No.A4DD4372T or equal (Legend No.80.42)	5			
C3-18	3.5 inch sub-base 5 inch bc on top and bottom ,PLP Cat. No.A4DD17490T or equal (Legend No.80.51)	40			
C3-19	Galvanized steel bolt, M16, 50 mm. long ,EGAT Cat. No.SD-AB-0-01 or equal (Legend No.90.31)	110			

DRAFT

INVITATION TO BID NO. IETS-LPLC-TIEC-NPUP-MC1-01

Schedule C3 : Compression Connector and Miscellaneous Hardware

SUPPLY OF MISCELLANEOUS EQUIPMENT

LONG-TERM INVESTMENT PLAN TO ACCOMMODATE LARGE POWER CONSUMER

Item No.	Description	Qty.	Unit	**Supply of Equipment** Local Supply Ex-works Price (excluding VAT) Baht	
				Unit Price	Amount
C3-20	Galvanized steel bolt, M16, 55 mm. long ,EGAT Cat. No.SD-AB-0-01 or equal (Legend No.90.32)	30			
C3-21	Galvanized steel nut for M16 bolt ,EGAT Cat. No.SD-AB-0-01 or equal (Legend No.90.36)	140			
C3-22	Galvanized steel spring washer for M16 bolt ,EGAT Cat. No.SD-AB-0-01 or equal (Legend No.90.46)	140			
Total Price for Schedule C3				**Baht**	

DRAFT

INVITATION TO BID NO. IETS-LPLC-TIEC-NPUP-MC1-01

Schedule C4 : 230 kV and below Bus Fitting

SUPPLY OF MISCELLANEOUS EQUIPMENT

LONG-TERM INVESTMENT PLAN TO ACCOMMODATE LARGE POWER CONSUMER

Item No.	Description	Qty.	Unit	Currency	**Supply of Equipment**				**Supply of Equipment**	
					Foreign Supply				Local Supply	
					FOB Vessel	Cost of Transportation to Thai Port	CFR Thai Port		Ex-works Price (excluding VAT) Baht	
					Unit Price	Unit Price	Unit Price	Amount	Unit Price	Amount
C4-1	Reference : Specification No.605 Tubular bus suspension clamp, ball socket type (ANSI C29.2, type B) for 2 inch IPS aluminum tube ,Burndy Cat. No.CHS18A or equal (Legend No.12.53)	5								
C4-2	Tubular bus suspension clamp, ball socket type (ANSI C29.2, type B) for 3 inch IPS aluminum tube ,Burndy Cat. No.CHS20A or equal (Legend No.12.55)	5								
C4-3	Bus support clamp, with 5 inch bc fitting for 1272 MCM ACSR ,Burndy Cat. No.UHKR16A-5B or equal (Legend No.13.45) (Hardware for fixing to base of insulator shall comprise of 5/8 inch-11 UNC bolt and split lockwashers for bolt size 5/8 inch, the length of bolt shall be 35 mm)	10								
C4-4	Bus support clamp, with 3 inch bc fitting for 1272 MCM ACSR ,Burndy Cat. No.UHKR16A-3B or equal (Legend No.13.55) (Hardware for fixing to base of insulator shall comprise of 1/2 inch-13 UNC bolt and split lockwashers, the length of bolt shall be 30 mm)	5								
C4-5	Bus support clamp, with 3 inch bc fitting for 2x1272 MCM ACSR ,Burndy Cat. No.U2HKR16A-3B or equal (Legend No.13.73) (Hardware for fixing to base of insulator shall comprise of 1/2 inch-13 UNC bolt and split lockwashers, the length of bolt shall be 30 mm)	5								
C4-6	Bus support clamp, with 3 inch bc fitting for 2 inch IPS aluminum tube, slip or rigid fit ,Burndy Cat. No.UHG18A-3-B or equal (Legend No.15.23) (Hardware for fixing to base of insulator shall comprise of 1/2 inch-13 UNC bolt and split lockwashers, the length of bolt shall be 30 mm)	5								

DRAFT

INVITATION TO BID NO. IETS-LPLC-TIEC-NPUP-MC1-01

Schedule C4 : 230 kV and below Bus Fitting

SUPPLY OF MISCELLANEOUS EQUIPMENT

LONG-TERM INVESTMENT PLAN TO ACCOMMODATE LARGE POWER CONSUMER

Item No.	Description	Qty.	Unit	Currency	**Supply of Equipment**				**Supply of Equipment**	
					Foreign Supply				Local Supply	
					FOB Vessel	Cost of Transportation to Thai Port	CFR Thai Port		Ex-works Price (excluding VAT) Baht	
					Unit Price	Unit Price	Unit Price	Amount	Unit Price	Amount
C4-7	Bus support clamp, with 3 inch bc fitting for 3 inch IPS aluminum tube, slip or rigid fit ,Burndy Cat. No.UHG20A-3B or equal (Legend No.15.25) (Hardware for fixing to base of insulator shall comprise of 1/2 inch-13 UNC bolt and split lockwashers, the length of bolt shall be 30 mm)	5								
C4-8	Bus support, with 5 inch bc fitting for 2 inch IPS aluminum tube, slip or rigid fit ,Burndy Cat. No.WOH18A-5B or equal (Legend No.15.43) (Hardware for fixing to base of insulator shall comprise of 5/8 inch-11 UNC bolt and split lockwashers for bolt size 5/8 inch, the length of bolt shall be 35 mm)	10								
C4-9	Bus support, with 5 inch bc fitting for 3 inch IPS aluminum tube, slip or rigid fit ,Burndy Cat. No.WOH20A-5B or equal (Legend No.15.45) (Hardware for fixing to base of insulator shall comprise of 5/8 inch-11 UNC bolt and split lockwashers for bolt size 5/8 inch, the length of bolt shall be 35 mm)	20								
C4-10	Bus support, with 5 inch bc fitting for 5 inch IPS aluminum tube, slip or rigid fit ,Burndy Cat. No.WOH24A-5B or equal (Legend No.15.47) (Hardware for fixing to base of insulator shall comprise of 5/8 inch-11 UNC bolt and split lockwashers for bolt size 5/8 inch, the length of bolt shall be 35 mm)	10								
C4-11	Terminal connector, weld type for 2x1272 MCM ACSR ,Burndy Cat. No.W2A54R-4N or equal (Legend No.28.63)	45								
C4-12	Terminal connector, weld type for 1272 MCM ACSR ,Burndy Cat. No.WA54R-4N or equal (Legend No.29.83)	155								

DRAFT

INVITATION TO BID NO. IETS-LPLC-TIEC-NPUP-MC1-01

Schedule C4 : 230 kV and below Bus Fitting

SUPPLY OF MISCELLANEOUS EQUIPMENT

LONG-TERM INVESTMENT PLAN TO ACCOMMODATE LARGE POWER CONSUMER

Item No.	Description	Qty.	Unit	Currency	**Supply of Equipment**				**Supply of Equipment**	
					Foreign Supply				Local Supply	
					FOB Vessel	Cost of Transportation to Thai Port	CFR Thai Port		Ex-works Price (excluding VAT) Baht	
					Unit Price	Unit Price	Unit Price	Amount	Unit Price	Amount
C4-13	Terminal connector 90 degree, weld type for 1272 MCM ACSR ,Burndy Cat. No.WA54R-4N-90 or equal (Legend No.29.93)	10								
C4-14	Terminal connector, weld type for 2 inch IPS Sch.40 aluminum tube, four holes ,Burndy Cat. No.SWAC18A-34N or equal (Legend No.30.03)	10								
C4-15	Terminal connector, weld type for 3 inch IPS Sch.40 aluminum tube, four holes ,Burndy Cat. No.SWAC20A-34N-SG or equal (Legend No.30.05)	10								
C4-16	Expansion terminal connector, weld type for 2 inch IPS Sch.40 aluminum tube, four holes ,Burndy Cat. No.WXA18A-4N-SG1 or equal (Legend No.30.13)	5								
C4-17	Expansion terminal connector, weld type for 3 inch IPS Sch.40 aluminum tube, four holes ,Burndy Cat. No.WXA20A-4N-SG4 or equal (Legend No.30.15)	5								
C4-18	Connector angle " T ", weld type for 2 inch IPS aluminum tube run to 80 degree 2 inch IPS aluminum tube tap ,Burndy Cat. No.SWT18A18A-80 or equal (Legend No.39.07)	40								
C4-19	Connector angle " T ", weld type for 5 inch IPS aluminum tube run to 80 degree 3 inch IPS aluminum tube tap ,Burndy Cat. No.SWT24A20A-80 or equal (Legend No.39.48)	15								
C4-20	Connector " V ", weld type for 3 inch IPS aluminum tube run to 20 degree 2 inch IPS aluminum tube tap ,Burndy Cat. No.SWAT20A18A-20 or equal (Legend No.41.32)	20								
C4-21	Connector " V ", weld type for 5 inch IPS aluminum tube run to 20 degree 3 inch IPS aluminum tube tap ,Burndy Cat. No.SWAT24A20A-20 or equal (Legend No.41.53)	10								
C4-22	Bar tap, weld type for 2 inch IPS aluminum tube to four holes NEMA pad ,Burndy Cat. No.SWAB19A-34N or equal (Legend No.42.02)	10								

DRAFT

INVITATION TO BID NO. IETS-LPLC-TIEC-NPUP-MC1-01

Schedule C4 : 230 kV and below Bus Fitting

SUPPLY OF MISCELLANEOUS EQUIPMENT

LONG-TERM INVESTMENT PLAN TO ACCOMMODATE LARGE POWER CONSUMER

Item No.	Description	Qty.	Unit	Currency	**Supply of Equipment**				**Supply of Equipment**	
					Foreign Supply				Local Supply	
					FOB Vessel	Cost of Transportation to Thai Port	CFR Thai Port		Ex-works Price (excluding VAT) Baht	
					Unit Price	Unit Price	Unit Price	Amount	Unit Price	Amount
C4-23	Bar tap, weld type for 3 inch IPS aluminum tube to four holes NEMA pad ,Burndy Cat. No.SWAB20A-4N or equal (Legend No.42.04)	10								
C4-24	Coupler, weld type for 3 inch IPS Sch.40 aluminum tube ,Burndy Cat. No.WS20A-F or equal (Legend No.44.04)	25								
C4-25	Coupler, weld type for 5 inch IPS Sch.40 aluminum tube ,Burndy Cat. No.WS24A-F or equal (Legend No.44.06)	15								
C4-26	Corona bell, internal type for 2 inch IPS Sch.40 aluminum tube ,Burndy Cat. No.LB18A or equal (Legend No.45.54)	10								
C4-27	Corona bell, internal type for 3 inch IPS Sch.40 aluminum tube ,Burndy Cat. No.LB20A or equal (Legend No.45.56)	20								
C4-28	Corona bell, internal type for 5 inch IPS Sch.40 aluminum tube ,Burndy Cat. No.LB24A or equal (Legend No.45.58)	10								
C4-29	Spacer connector for 2x1272 MCM ACSR, distance between conductor center 100 mm. ,Burndy Cat. No.S2GBP46A-10 or equal (Legend No.47.05)	20								
C4-30	Spacer connector for 2x1272 MCM ACSR, distance between conductor center 200 mm. ,Burndy Cat. No.S2GBP46A-20 or equal (Legend No.47.15)	20								
C4-31	Stainless steel hexagon head bolts, 0.5-13 inch, 2.5 inch long fully threaded and manufactures of series 18-8 material, coarse thread series class 2A tolerance ,Burndy Cat. No.50x250 HSSB or equal (Legend No.90.51)	510								
C4-32	Stainless steel hexagon head bolts, 0.5-13 inch, 3.0 inch long fully threaded and manufactures of series 18-8 material, coarse thread series class 2A tolerance ,Burndy Cat. No.50x300 HSSB or equal (Legend No.90.54)	850								

DRAFT

INVITATION TO BID NO. IETS-LPLC-TIEC-NPUP-MC1-01

Schedule C4 : 230 kV and below Bus Fitting

SUPPLY OF MISCELLANEOUS EQUIPMENT

LONG-TERM INVESTMENT PLAN TO ACCOMMODATE LARGE POWER CONSUMER

Item No.	Description	Qty.	Unit	Currency	**Supply of Equipment**				**Supply of Equipment**	
					Foreign Supply				Local Supply	
					FOB Vessel	Cost of Transportation to Thai Port	CFR Thai Port		Ex-works Price (excluding VAT) Baht	
					Unit Price	Unit Price	Unit Price	Amount	Unit Price	Amount
C4-33	Stainless steel hexagon nuts manufactures of series 18-8 material finish type, coarse thread series class 2B fit for 0.5-13 inch bolts size ,Burndy Cat. No.50 HSSN or equal (Legend No.90.61)	1355								
C4-34	Stainless steel flat washers manufactures of 18-8 material and of medium design 1.125 inch O.D., 0.594 inch I.D., and 0.125 inch thickness ,Burndy Cat. No.50 FWSS or equal (Legend No.90.66)	2700								
C4-35	Stainless steel belleville washers manufactures of alloy 301, 302 or 18-8 materials, 1.06 inch O.D., 0.530 inch I.D., 0.095 inch thickness ,Burndy Cat. No.50x106 BWSS or equal (Legend No.90.76)	1355								
C4-36	Aluminum joint compound in 8-oz bottles ,Burndy Cat. No.P8A or equal (Legend No.90.91)	110								
Total Price for Schedule C4									**Baht**	

DRAFT

INVITATION TO BID NO. IETS-LPLC-TIEC-NPUP-MC1-01

Schedule C5 : Grounding Material

SUPPLY OF MISCELLANEOUS EQUIPMENT

LONG-TERM INVESTMENT PLAN TO ACCOMMODATE LARGE POWER CONSUMER

Item No.	Description	Qty.	Unit	Currency	**Supply of Equipment**				**Supply of Equipment**	
					Foreign Supply				Local Supply	
					FOB Vessel	Cost of Transportation to Thai Port	CFR Thai Port		Ex-works Price (excluding VAT) Baht	
					Unit Price	Unit Price	Unit Price	Amount	Unit Price	Amount
C5-1	Reference : Specification No. 603 Exothermic welding mold for connecting horizontal cable of no. 4/0 AWG run to horizontal through cable of no. 4/0 AWG copper ground wire tap ,Kumwell Cat. No.CC2-C-4/04/0 or equal (Legend No.60.03)	15			XXXXX	XXXXX	XXXXX	XXXXX		
C5-2	Exothermic welding mold for connecting angular cable drop of no. 4/0 AWG copper ground wire to vertical steel flat surface ,Kumwell Cat. No.CS3-Y-4/0 or equal (Legend No.60.04)	6			XXXXX	XXXXX	XXXXX	XXXXX		
C5-3	Exothermic welding mold for connecting angular cable drop of no. 4/0 AWG copper ground wire to vertical steel pipe 2-4 inch diameter ,Kumwell Cat. No.CP1-X-4/0 or equal (Legend No.60.05)	1			XXXXX	XXXXX	XXXXX	XXXXX		
C5-4	Exothermic welding mold for connecting cable of no. 4/0 AWG copper ground wire vertical through to steel flat surface ,Kumwell Cat. No.CS4-Y-4/0 or equal (Legend No.60.07)	19			XXXXX	XXXXX	XXXXX	XXXXX		
C5-5	Changeable handle clamp ,Kumwell Cat. No.HCC00-XY or equal (Legend No.60.09)	4			XXXXX	XXXXX	XXXXX	XXXXX		
C5-6	Welding powder cartridges for mold ,Kumwell Cat. No.CC2-C-4/04/0 or equal (Legend No.60.11)	386			XXXXX	XXXXX	XXXXX	XXXXX		
C5-7	Welding powder cartridges for mold ,Kumwell Cat. No.CS3-Y-4/0 or equal (Legend No.60.12)	147			XXXXX	XXXXX	XXXXX	XXXXX		
C5-8	Welding powder cartridges for mold ,Kumwell Cat. No.CP1-X-4/0 or equal (Legend No.60.13)	18			XXXXX	XXXXX	XXXXX	XXXXX		

DRAFT

INVITATION TO BID NO. IETS-LPLC-TIEC-NPUP-MC1-01

Schedule C5 : Grounding Material

SUPPLY OF MISCELLANEOUS EQUIPMENT

LONG-TERM INVESTMENT PLAN TO ACCOMMODATE LARGE POWER CONSUMER

Item No.	Description	Qty.	Unit	Currency	**Supply of Equipment**				**Supply of Equipment**	
					Foreign Supply				Local Supply	
					FOB Vessel	Cost of Transportation to Thai Port	CFR Thai Port		Ex-works Price (excluding VAT) Baht	
					Unit Price	Unit Price	Unit Price	Amount	Unit Price	Amount
C5-9	Welding powder cartridges for mold ,Kumwell Cat. No.CS4-Y-4/0 or equal (Legend No.60.15)	498			XXXXX	XXXXX	XXXXX	XXXXX		
C5-10	Tool kit complete set ,Kumwell Cat. No.KTA000 or equal (Legend No.60.17)	3			XXXXX	XXXXX	XXXXX	XXXXX		
C5-11	Flint igniter ,Kumwell Cat. No.KTA014U or equal (Legend No.60.18)	43			XXXXX	XXXXX	XXXXX	XXXXX		
C5-12	Single terminal lug one hole for 4/0 AWG copper ground wire ,Kumwell Cat. No.KGXTEL-4/0 or	3								
C5-13	Ground connector for 2x4/0 AWG copper ground wire to steel flat surface ,Kumwell Cat. No.GXCCP-	18								
C5-14	Flexible copper braid, 14 inch long, 600 A ,Kumwell Cat. No.KGZFCB 39533 or equal	5								
C5-15	Cable clamp for 4/0 AWG copper ground wire run to cable trench wall (with expansion bolt) ,Kumwell Cat. No.KGRC-A or equal (Legend No.60.22)	183								
Total Price for Schedule C5									**Baht**	

DRAFT

INVITATION TO BID NO. IETS-LPLC-TIEC-NPUP-MC1-01

Schedule D1 : Compression Connector and Miscellaneous Hardware

SUPPLY OF MISCELLANEOUS EQUIPMENTSUPPLY OF MISCELLANEOUS EQUIPMENT TRANSMISSION SYSTEM DEVELOPMENT IN THE AREA OF NAN PHRAE AND UTTARADIT PROVINCES FOR POWER PURCHASE FROM LAO PDR PROJECTS

Item No.	Description	Qty.	Unit	**Supply of Equipment**	
				Local Supply	
				Ex-works Price (excluding VAT) Baht	
				Unit Price	Amount
D1-1	Reference : Specification No.605 Aluminum alloy straight compression terminal for 1272 MCM ACSR, four holes NEMA pad ,Lorunser Cat. No.771.059.9 or equal (Legend No.16.45A). In addition, each compression terminal shall be furnished with the following accessories : - Stainless steel bolts, nuts, flat washers and belleville washers - Aluminum alloy streamlined cap for shielding hardware when bolting terminal to flat pad	55			
D1-2	500 kV Suspension insulator assembly (A903), excluding insulators, as per drawing no. SE-IS-9-01-02/03	15	set		
D1-3	Strain clamp for 3/8 inch diameter galvanized steel OHG wire ,PLP Cat. No.A3DD4749T or equal (Legend No.12.21)	10			
D1-4	Compression terminal for 1272 MCM ACSR, straight type, four holes NEMA pad without mounting bolt ,PLP Cat. No.A4DD17829T or equal (Legend No.16.45)	30			

DRAFT

INVITATION TO BID NO. IETS-LPLC-TIEC-NPUP-MC1-01

Schedule D1 : Compression Connector and Miscellaneous Hardware

SUPPLY OF MISCELLANEOUS EQUIPMENTSUPPLY OF MISCELLANEOUS EQUIPMENT TRANSMISSION SYSTEM DEVELOPMENT IN THE AREA OF NAN PHRAE AND UTTARADIT PROVINCES FOR POWER PURCHASE FROM LAO PDR PROJECTS

Item No.	Description	Qty.	Unit	**Supply of Equipment**	
				Local Supply	
				Ex-works Price (excluding VAT) Baht	
				Unit Price	Amount
D1-5	Compression tee for 1272 MCM ACSR, four holes NEMA pad ,PLP Cat. No.A4DD16883T or equal (Legend No.17.43)	15			
D1-6	Cable clamp for 3/8 inch diameter galvanized steel OHG wire, run to flat surface ,PLP Cat. No.A4DD3792T or equal (Legend No.46.61)	10			
D1-7	Ball eye 16 mm. ,PLP Cat. No.A4DD1114T or equal (Legend No.80.06)	5			
D1-8	Socket eye with 16 mm. boss ,PLP Cat.	5			
D1-9	Bow shackle 16 mm. ,PLP Cat. No.A4DD14164T or equal (Legend No.80.31)	10			
D1-10	Turnbuckle clevis-eye 5/8 x 12 inch size and take up ,PLP Cat. No.A4DD17880T or equal (Legend No.80.38)	5			
Total Price for Schedule D1				**Baht**	

DRAFT

INVITATION TO BID NO. IETS-LPLC-TIEC-NPUP-MC1-01

Schedule D2 : 500 kV Bus Fitting

SUPPLY OF MISCELLANEOUS EQUIPMENTSUPPLY OF MISCELLANEOUS EQUIPMENT

TRANSMISSION SYSTEM DEVELOPMENT IN THE AREA OF NAN PHRAE AND UTTARADIT PROVINCES FOR POWER PURCHASE FROM LAO PDR PROJECTS

Item No.	Description	Qty.	Unit	Currency	**Supply of Equipment**				**Supply of Equipment**	
					Foreign Supply				Local Supply	
					FOB Vessel	Cost of Transportation to Thai Port	CFR Thai Port		Ex-works Price (excluding VAT) Baht	
					Unit Price	Unit Price	Unit Price	Amount	Unit Price	Amount
D2-1	Reference : Specification No.605 Aluminum alloy quadruple bundle connector with six holes NEMA pad, complete with straight compression terminals for 4x1272 MCM ACSR, bolts, nuts and washers ,Lorunser Cat. No.3-19019/1E or equal (Legend No.28.93A). In addition, aluminum alloy streamlined cap for shielding hardware when bolting terminal to flat pad shall be provided.	55								
D2-2	Aluminum alloy quadruple bundle connector with six holes NEMA pad, complete with clamp for 4x1272 MCM ACSR (through conductor), bolts, nuts and washers ,Lorunser Cat. No.3-19019/2E or equal (Legend No.28.96A)	40								
D2-3	Aluminum alloy quadruple bundle connector for stud terminal, complete with terminal for 4x1272 MCM ACSR, bolts, nuts and washers ,Lorunser Cat. No.3-19019/3 or equal (Legend No.28.99A)	30								
D2-4	Spacer connector for 2x1272 MCM ACSR, distance between conductor center 200 mm. ,Lorunser Cat. No.1QA102-040 or equal (Legend No.47.15A)	15								
D2-5	Spacer connector for 4x1272 MCM ACSR (Square), distance between conductor center 200 mm. ,RIBE Cat. No.Q4K-203 or equal (Legend No.47.22A)	110								

DRAFT

INVITATION TO BID NO. IETS-LPLC-TIEC-NPUP-MC1-01

Schedule D2 : 500 kV Bus Fitting

SUPPLY OF MISCELLANEOUS EQUIPMENTSUPPLY OF MISCELLANEOUS EQUIPMENT

TRANSMISSION SYSTEM DEVELOPMENT IN THE AREA OF NAN PHRAE AND UTTARADIT PROVINCES FOR POWER PURCHASE FROM LAO PDR PROJECTS

Item No.	Description	Qty.	Unit	Currency	**Supply of Equipment**				**Supply of Equipment**	
					Foreign Supply				Local Supply	
					FOB Vessel	Cost of Transportation to Thai Port	CFR Thai Port		Ex-works Price (excluding VAT) Baht	
					Unit Price	Unit Price	Unit Price	Amount	Unit Price	Amount
D2-6	Aluminum alloy portable earth connector for 4x 1272 MCM ACSR (EHV) ,Lorunser Cat. No.1HG407-041 or equal (Legend No.49.56A)	15								
Total Price for Schedule D2									**Baht**	

DRAFT

INVITATION TO BID NO. IETS-LPLC-TIEC-NPUP-MC1-01

Schedule D3 : 230 kV and below Bus Fitting

SUPPLY OF MISCELLANEOUS EQUIPMENTSUPPLY OF MISCELLANEOUS EQUIPMENT

TRANSMISSION SYSTEM DEVELOPMENT IN THE AREA OF NAN PHRAE AND UTTARADIT PROVINCES FOR POWER PURCHASE FROM LAO PDR PROJECTS

Item No.	Description	Qty.	Unit	Currency	**Supply of Equipment**				**Supply of Equipment**	
					Foreign Supply				Local Supply	
					FOB Vessel	Cost of Transportation to Thai Port	CFR Thai Port		Ex-works Price (excluding VAT) Baht	
					Unit Price	Unit Price	Unit Price	Amount	Unit Price	Amount
D3-1	Reference : Specification No.605 Terminal connector for 4x1272 MCM ACSR, Six holes NEMA PAD ,Lorunser Cat. No.3-19019/1E or equal (Legend No.28.93). In addition, aluminum alloy streamlined cap for shielding hardware when bolting terminal to flat pad shall be provided.	30								
D3-2	Stainless steel hexagon head bolts, 0.5-13 inch, 3.5 inch long fully threaded and manufactures of series 18-8 material, coarse thread series class 2A tolerance ,Burndy Cat. No.50x350 HSSB or equal (Legend No.90.52)	795								
D3-3	Stainless steel hexagon nuts manufactures of series 18-8 material finish type, coarse thread series class 2B fit for 0.5-13 inch bolts size ,Burndy Cat. No.50 HSSN or equal (Legend No.90.61)	795								

DRAFT

INVITATION TO BID NO. IETS-LPLC-TIEC-NPUP-MC1-01

Schedule D3 : 230 kV and below Bus Fitting

SUPPLY OF MISCELLANEOUS EQUIPMENTSUPPLY OF MISCELLANEOUS EQUIPMENT

TRANSMISSION SYSTEM DEVELOPMENT IN THE AREA OF NAN PHRAE AND UTTARADIT PROVINCES FOR POWER PURCHASE FROM LAO PDR PROJECTS

Item No.	Description	Qty.	Unit	Currency	**Supply of Equipment**				**Supply of Equipment**	
					Foreign Supply				Local Supply	
					FOB Vessel	Cost of Transportation to Thai Port	CFR Thai Port		Ex-works Price (excluding VAT) Baht	
					Unit Price	Unit Price	Unit Price	Amount	Unit Price	Amount
D3-4	Stainless steel flat washers manufactures of 18-8 material and of medium design 1.125 inch O.D., 0.594 inch I.D., and 0.125 inch thickness ,Burndy Cat. No.50 FWSS or equal (Legend No.90.66)	1585								
D3-5	Stainless steel belleville washers manufactures of alloy 301, 302 or 18-8 materials, 1.06 inch O.D., 0.530 inch I.D., 0.095 inch thickness ,Burndy Cat. No.50x106 BWSS or equal (Legend No.90.76)	795								
D3-6	Aluminum joint compound in 8-oz bottles ,Burndy Cat. No.P8A or equal (Legend No.90.91)	80								
Total Price for Schedule D3									**Baht**	

DRAFT

INVITATION TO BID NO. IETS-LPLC-TIEC-NPUP-MC1-01

Schedule D4 : Grounding Material

SUPPLY OF MISCELLANEOUS EQUIPMENTSUPPLY OF MISCELLANEOUS EQUIPMENT

TRANSMISSION SYSTEM DEVELOPMENT IN THE AREA OF NAN PHRAE AND UTTARADIT PROVINCES FOR POWER PURCHASE FROM LAO PDR PROJECTS

Item No.	Description	Qty.	Unit	Currency	**Supply of Equipment**				**Supply of Equipment**	
					Foreign Supply				Local Supply	
					FOB Vessel	Cost of Transportation to Thai Port	CFR Thai Port		Ex-works Price (excluding VAT) Baht	
					Unit Price	Unit Price	Unit Price	Amount	Unit Price	Amount
D4-1	Reference : Specification No.603 Ground rod size 5/8 inch diameter x 10 feet	22								
D4-2	Exothermic welding mold for connecting copper weld ground rod size 5/8 inch diameter to copper ground wire no. 4/0 AWG ,Kumwell Cat. No.CR2-C-5/84/0 or equal (Legend No.60.02)	1			XXXXX	XXXXX	XXXXX	XXXXX		
D4-3	Exothermic welding mold for connecting horizontal cable of no. 4/0 AWG run to horizontal through cable of no. 4/0 AWG copper ground wire tap ,Kumwell Cat. No.CC2-C-4/04/0 or equal (Legend No.60.03)	14			XXXXX	XXXXX	XXXXX	XXXXX		
D4-4	Exothermic welding mold for connecting angular cable drop of no. 4/0 AWG copper ground wire to vertical steel flat surface ,Kumwell Cat. No.CS3-Y-4/0 or equal (Legend No.60.04)	2			XXXXX	XXXXX	XXXXX	XXXXX		
D4-5	Exothermic welding mold for connecting angular cable drop of no. 4/0 AWG copper ground wire to vertical steel pipe 2-4 inch diameter ,Kumwell Cat. No.CP1-X-4/0 or equal (Legend No.60.05)	2			XXXXX	XXXXX	XXXXX	XXXXX		
D4-6	Exothermic welding mold for connecting horizontal to horizontal cable cross of no. 4/0 AWG copper ground wire tap cable, cut cable in same plane ,Kumwell Cat. No.CC4-C-4/04/0 or equal (Legend No.60.06)	1			XXXXX	XXXXX	XXXXX	XXXXX		
D4-7	Exothermic welding mold for connecting cable of no. 4/0 AWG copper ground wire vertical through to steel flat surface ,Kumwell Cat. No.CS4-Y-4/0 or equal (Legend No.60.07)	29			XXXXX	XXXXX	XXXXX	XXXXX		
D4-8	Changeable handle clamp ,Kumwell Cat. No.HCC00-XY or equal (Legend No.60.09)	5			XXXXX	XXXXX	XXXXX	XXXXX		
D4-9	Welding powder cartridges for mold ,Kumwell Cat. No.CR2-C-5/84/0 or equal (Legend No.60.10)	22			XXXXX	XXXXX	XXXXX	XXXXX		

DRAFT

INVITATION TO BID NO. IETS-LPLC-TIEC-NPUP-MC1-01

Schedule D4 : Grounding Material

SUPPLY OF MISCELLANEOUS EQUIPMENTSUPPLY OF MISCELLANEOUS EQUIPMENT

TRANSMISSION SYSTEM DEVELOPMENT IN THE AREA OF NAN PHRAE AND UTTARADIT PROVINCES FOR POWER PURCHASE FROM LAO PDR PROJECTS

Item No.	Description	Qty.	Unit	Currency	**Supply of Equipment** Foreign Supply				**Supply of Equipment** Local Supply	
					FOB Vessel	Cost of Transportation to Thai Port	CFR Thai Port		Ex-works Price (excluding VAT) Baht	
					Unit Price	Unit Price	Unit Price	Amount	Unit Price	Amount
D4-10	Welding powder cartridges for mold ,Kumwell Cat. No.CC2-C-4/04/0 or equal (Legend No.60.11)	402			XXXXX	XXXXX	XXXXX	XXXXX		
D4-11	Welding powder cartridges for mold ,Kumwell Cat. No.CS3-Y-4/0 or equal (Legend No.60.12)	43			XXXXX	XXXXX	XXXXX	XXXXX		
D4-12	Welding powder cartridges for mold ,Kumwell Cat. No.CP1-X-4/0 or equal (Legend No.60.13)	36			XXXXX	XXXXX	XXXXX	XXXXX		
D4-13	Welding powder cartridges for mold ,Kumwell Cat. No.CC4-C-4/04/0 or equal (Legend No.60.14)	17			XXXXX	XXXXX	XXXXX	XXXXX		
D4-14	Welding powder cartridges for mold ,Kumwell Cat. No.CS4-Y-4/0 or equal (Legend No.60.15)	845			XXXXX	XXXXX	XXXXX	XXXXX		
D4-15	Tool kit complete set ,Kumwell Cat. No.KTA000 or equal (Legend No.60.17)	3			XXXXX	XXXXX	XXXXX	XXXXX		
D4-16	Flint igniter ,Kumwell Cat. No.KTA014U or equal (Legend No.60.18)	52			XXXXX	XXXXX	XXXXX	XXXXX		
D4-17	Single terminal lug one hole for 4/0 AWG copper ground wire ,Kumwell Cat. No.KGXTEL-4/0 or equal (Legend No.60.19)	43								
D4-18	Cable clamp for 4/0 AWG copper ground wire run to cable trench wall (with expansion bolt) ,Kumwell Cat. No.KGRC-A or equal (Legend No.60.22)	1078								
D4-19	Ground safety mat no. 6 AWG solid copper wire size 1.2 x 1.2 m. Spacing 0.15 x 0.15 m. ,Kumwell Cat. No.CC14-C-#6#6 or equal (Legend No.60.23)	14								
Total Price for Schedule D4									**Baht**	

DRAFT

INVITATION TO BID NO. IETS-LPLC-TIEC-NPUP-MC1-01

Schedule D5 : Rigid Steel Conduit

SUPPLY OF MISCELLANEOUS EQUIPMENTSUPPLY OF MISCELLANEOUS EQUIPMENT TRANSMISSION SYSTEM DEVELOPMENT IN THE AREA OF NAN PHRAE AND UTTARADIT PROVINCES FOR POWER PURCHASE FROM LAO PDR PROJECTS

Item No.	Description	Qty.	Unit	**Supply of Equipment**	
				Local Supply	
				Ex-works Price (excluding VAT) Baht	
				Unit Price	Amount
D5-1	Reference : Specification No. 522 Rigid steel conduit 2.0 inch dia., 3.05 m long	85			
Total Price for Schedule D5				**Baht**	

DRAFT

INVITATION TO BID NO. IETS-LPLC-TIEC-NPUP-MC1-01

Schedule D6 : Conduit Fitting

SUPPLY OF MISCELLANEOUS EQUIPMENTSUPPLY OF MISCELLANEOUS EQUIPMENT

TRANSMISSION SYSTEM DEVELOPMENT IN THE AREA OF NAN PHRAE AND UTTARADIT PROVINCES FOR POWER PURCHASE FROM LAO PDR PROJECTS

Item No.	Description	Qty.	Unit	Currency	**Supply of Equipment**				**Supply of Equipment**	
					Foreign Supply				Local Supply	
					FOB Vessel	Cost of Transportation to Thai Port	CFR Thai Port		Ex-works Price (excluding VAT) Baht	
					Unit Price	Unit Price	Unit Price	Amount	Unit Price	Amount
	Reference : Specification No. 522									
D6-1	Bushing for rigid steel conduit 2.0 inch dia.	165								
D6-2	Lock nut for rigid steel conduit 2.0 inch dia.	175								
D6-3	Coupling for rigid steel conduit 2.0 inch dia.	80								
D6-4	Flexible rain tight conduit 2.0 inch dia., 15	20								
D6-5	Connector for flexible rain tight conduit 2.0 inch dia.	160								
Total Price for Schedule D6									**Baht**	

DRAFT

PART 2: PROPOSAL DATA

DRAFT

LED FLOOD LIGHTING FIXTURE

FORM PD 611.1(L)
May. 2026

PROPOSAL DATA

PROCUREMENT REFERENCE	IETS-LPLC-TIEC-NPUP-MC1-01	**SCHEDULE NO.**	
BIDDER		**ITEM NO.**	

a. Applied Standards	
b. Lighting Fixture - Manufacturer / Country - Type / Model / Cat. No.	

Note.
Catalog of the proposed equipment shall be submitted for preliminary consideration. Actual type (such as size, length etc.) shall be submitted for approval after design stage.

DRAFT

LED STREET LIGHTING FIXTURE AND TAPERED GALVANIZED STEEL LAMP POST

FORM PD 612.2(L)
May. 2026

PROPOSAL DATA

PROCUREMENT REFERENCE	IETS-LPLC-TIEC-NPUP-MC1-01	**SCHEDULE NO.**	
BIDDER		**ITEM NO.**	

LED STREET LIGHTING FIXTURE

a. Applied Standards	
b. Lighting Fixture	
- Manufacturer / Country	
- Type / Model / Cat. No.	

TAPERED GALVANIZED STEEL LAMP POST

a. Manufacturer / Country	
- Fabrication	
- Hot Dip Galvanizing	

Note.
Catalog of the proposed equipment shall be submitted for preliminary consideration. Actual type (such as size, length etc.) shall be submitted for approval after design stage.

DRAFT

SOLAR LIGHTING FIXTURE AND TAPERED GALVANIZED STEEL LAMP POST

FORM PD 611.2(S)
May. 2026

PROPOSAL DATA

PROCUREMENT REFERENCE	IETS-LPLC-TIEC-NPUP-MC1-01	**SCHEDULE NO.**	
BIDDER		**ITEM NO.**	

SOLAR LIGHTING FIXTURE

a. Applied Standards

b. Lighting Fixture
- Manufacturer / Country
- Type / Model / Cat. No.

TAPERED GALVANIZED STEEL LAMP POST

a. Manufacturer / Country
- Fabrication
- Hot Dip Galvanizing

Note.
Catalog of the proposed equipment shall be submitted for preliminary consideration. Actual type (such as size, length etc.) shall be submitted for approval after design stage.

DRAFT

ALUMINUM TUBE

FORM PD 605
Mar. 2025

PROPOSAL DATA

PROCUREMENT REFERENCE	IETS-LPLC-TIEC-NPUP-MC1-01	**SCHEDULE NO.**	
BIDDER		**ITEM NO.**	

a.	Manufacturer / Country		
b.	Applied Standards	ASTM B241	
c.	Aluminum Alloy Designation and Temper		
d.	Chemical Composition		
	- Silicon		%
	- Iron		%
	- Copper		%
	- Manganese		%
	- Magnesium		%
	- Chromium		%
	- Zinc		%
	- Titanium		%
	- Other		%
	- Aluminum Min		%
e.	Tensile Property Limits		
	- Tensile Strength		kg/sq.mm
	- Yield Strength		kg/sq.mm
	- Elongation		%
f.	Physical Properties		
	- Nominal Pipe Size,		
	- Outside Diameter	±	mm
	- Inside Diameter		mm
	- Wall Thickness	±	mm
	- Weight		kg/m
	- Nominal Pipe Size,		
	- Outside Diameter	±	mm
	- Inside Diameter		mm
	- Wall Thickness	±	mm
	- Weight		kg/m
	- Nominal Pipe Size,		
	- Outside Diameter	±	mm
	- Inside Diameter		mm
	- Wall Thickness	±	mm
	- Weight		kg/m
	- Nominal Pipe Size,		
	- Outside Diameter	±	mm
	- Inside Diameter		mm
	- Wall Thickness	±	mm
	- Weight		kg/m

*in case of other, please specify in the box below :

DRAFT

COMPRESSION CONNECTOR AND MISCELLANEOUS HARDWARE

FORM PD 605.1
Mar. 2025

PROPOSAL DATA

PROCUREMENT REFERENCE	IETS-LPLC-TIEC-NPUP-MC1-01	**SCHEDULE NO.**	
BIDDER		**ITEM NO.**	

a. Compression Connector		
- Manufacturer / Country		
- Applied Standards	NEMA CC1	
- Aluminum Alloy Designation and Temper		
- Chemical Composition		
- Silicon + Iron		(%)
- Copper		(%)
- Manganese		(%)
- Zinc.		(%)
- Other		(%)
- Aluminum (min.)		(%)
- Compression Dead End Body	☐ Extruded Tube	☐ Casting
- Compression Terminal Body	☐ Extruded Tube	☐ Casting
- Compression Connector Body	☐ Extruded Tube	☐ Casting
b. Miscellaneous Hardware		
- Manufacturer / Country		

Note.
Reference drawing or catalog of the proposed equipment showing dimension, material of each part, average and minimum galvanizing coating weight, ultimate strength and weight shall be submitted.

DRAFT

BUS FITTING

FORM PD 605.2
Mar. 2025

PROPOSAL DATA

PROCUREMENT REFERENCE	IETS-LPLC-TIEC-NPUP-MC1-01	**SCHEDULE NO.**	
BIDDER		**ITEM NO.**	

a.	Manufacturer / Country		
b.	Applied Standards	☐ NEMA CC1	
c.	Aluminum Alloy Designation and Temper		
d.	Chemical Composition		
	- Silicon		%
	- Iron		%
	- Copper		%
	- Manganese		%
	- Magnesium		%
	- Chromium		%
	- Zinc		%
	- Titanium		%
	- Other		%
	- Aluminum (min.)		%
e.	Tensile Strength (min.)		ksi
f.	Yield Strength (min.)		ksi
g.	Elongation (min.)		%
h.	Hardware		
	- Aluminum		
	- Bolts Alloy and Temper		
	- Nuts Alloy and Temper		
	- Split Lock Washer Alloy and Temper		
	- Anodic Coating and Lubricate	☐ Yes ☐ No	
	- Stainless Steel		
	- Bolts Alloy No.		
	- Nuts Alloy No.		
	- Flat Washer Alloy No.		
	- Belleville Washers Alloy No.		

Note.
Reference drawing or catalog of the proposed equipment showing dimension, material of each part, weight and current rating (if any) shall be submitted.

DRAFT

GROUND ROD

FORM PD 603.1
Mar. 2025

PROPOSAL DATA

PROCUREMENT REFERENCE	IETS-LPLC-TIEC-NPUP-MC1-01	**SCHEDULE NO.**	
BIDDER		**ITEM NO.**	

a.	Manufacturer / Country		
b.	Type / Model / Cat. No.		
c.	Applied Standards		
d.	Material		
e.	Nominal Size and Length		mm x m
f.	Actual Size and Length		mm x m
g.	Method of Production		
h.	Copper Coating Thickness		mm
i.	Tensile Strength		psi
j.	Weight per piece		kg

Note.
Outline drawing including dimension or catalog of the proposed ground rod shall be submitted.

DRAFT

THERMITE WELDING MATERIAL

FORM PD 603.2
Mar. 2025

PROPOSAL DATA

PROCUREMENT REFERENCE	IETS-LPLC-TIEC-NPUP-MC1-01	**SCHEDULE NO.**	
BIDDER		**ITEM NO.**	

a. Mold

- Manufacturer / Country
- Type / Cat. No.

Item No.	/		Item No.	/	
Item No.	/		Item No.	/	
Item No.	/		Item No.	/	
Item No.	/		Item No.	/	
Item No.	/		Item No.	/	

b. Welding Powder

- Manufacturer / Country
- Cartridge Size

Item No.	/		Item No.	/	
Item No.	/		Item No.	/	
Item No.	/		Item No.	/	
Item No.	/		Item No.	/	
Item No.	/		Item No.	/	

c. Accessories

- Manufacturer / Country
- Type / Cat. No.

- Changeable Handle clamp	Item No.	/	
- Flint Gun	Item No.	/	
- Flint	Item No.	/	
- Cable Clamp	Item No.	/	
- Cable Cutter	Item No.	/	
- Cable Cleaning Brush	Item No.	/	
- Tool Kit	Item No.	/	

Note.
Outline drawing including dimension or catalog of the proposed thermite welding material shall be submitted.

DRAFT

GROUNDING HARDWARE AND ACCESSORIES

FORM PD 603.3
Mar. 2025

PROPOSAL DATA

PROCUREMENT REFERENCE	IETS-LPLC-TIEC-NPUP-MC1-01	**SCHEDULE NO.**	
BIDDER		**ITEM NO.**	

	Item No.	Manufacturer / Country	Type / Cat. No.
a. Ground Rod Driving Sleeves			
b. Single Terminal Lug			
c. Flexible Copper Braids 14 inch.			
d. Flexible Copper Earth shunt 350 mm			
e. Flexible Copper Earth shunt 1000 mm			
f. Connector for 4/0 AWG Cu Ground Wire to Steel Flat Surface			
g. Cable Clamp with Expansion Bolt			
h. Grounding Safety Mat			
i. Bronze Terminal for 4/0 AWG Cu Ground Wire Run to Flat Surface, 4-Hole NEMA Pad			
j. Parallel Clamp for 4/0 AWG Cu Ground Wire Run to No. 6 AWG Cu Ground Wire			
k Compression terminal for 4/0 AWG copper ground wire			
l Compression terminal for 185 sq.mm. copper ground wire			

Note.
Outline drawing including dimension or catalog of the proposed grounding hardware shall be submitted.

DRAFT

RIGID STEEL CONDUIT

FORM PD 522.2
Mar. 2025

PROPOSAL DATA

PROCUREMENT REFERENCE	IETS-LPLC-TIEC-NPUP-MC1-01	**SCHEDULE NO.**	
BIDDER		**ITEM NO.**	

a. Manufacturer / Country

b. Trade Size of Conduit inch

c. Zinc Coating [/] Hot Dip Galvanized Process

Note.
Outline drawing including dimension or catalog of the proposed conduit shall be submitted.

DRAFT

CONDUIT FITTINGS

FORM PD 522.3
Mar. 2025

PROPOSAL DATA

PROCUREMENT REFERENCE	IETS-LPLC-TIEC-NPUP-MC1-01	**SCHEDULE NO.**	
BIDDER		**ITEM NO.**	

a. Bushing for Rigid Steel Conduit	
- Manufacturer / Country	
- Size	inch
- Zinc Coating	[/] Hot Dip Galvanized Process
b. Locknut for Rigid Steel Conduit	
- Manufacturer / Country	
- Size	inch
- Zinc Coating	[/] Hot Dip Galvanized Process
c. Coupling for Rigid Steel Conduit	
- Manufacturer / Country	
- Size	inch
- Zinc Coating	[/] Hot Dip Galvanized Process
d. Service Entrance	
- Manufacturer / Country	
- Size	inch
e. Conduit Pipe Clamp	
- Manufacturer / Country	
- Size	inch
- Zinc Coating	[/] Hot Dip Galvanized Process
f. Channel Support for Conduit Pipe Clamp	
- Manufacturer / Country	
- Size	
- Zinc Coating	[/] Hot Dip Galvanized Process
g. Flexible Rain Tight Conduit	
- Manufacturer / Country	
- Size	
h. Connector for Flexible Rain Tight Conduit	
- Manufacturer / Country	
- Size	

<u>Note.</u>

Outline drawing including dimension or catalog of the proposed conduit fittings shall be submitted.

DRAFT

DEVIATIONS

The undersigned Bidder confirms that the Proposal submitted by the Bidder

☐ complies with Specifications and commercial terms specified in the Bidding Documents.

☐ contains deviations from Specifications and/or commercial terms specified in the Bidding Documents as listed hereunder (Use continuation sheets, if required):

……
……
……
……
……
……
……
……
……
……
……
……
……
……
……
……
……
……
……
……

Confirmed :

Firm : _____

By : _____

Title : _____

DRAFT

PART 3: DELIVERY SCHEDULE AND DISTRIBUTION LIST

DRAFT

INVITATION TO BID NO. IETS-LPLC-TIEC-NPUP-MC1-01

Delivery Schedule and Distribution List

Work Plan to Improve the Electricity Supply Model for High Voltage Substation to Enhance the Transmission System Stability and Reliability

Schedule A1 : Switchyard Lighting Fixture

Item No.	Description	Qty	Job no.	Substation	Delivery Required by EGAT (within months after confirmation of Letter of Award of Contract)
					CFR Thai Port / Ex-works / DDP EGAT's Store
A1-1	Flood lighting fixture, LED lamp, 10000 lumen, wide-beam, complete with control gear as per Specification attached	1	IETS-01-S02	NBL	10
		2	IETS-01-S03	RN	10
		2	IETS-01-S04	CP	10
		1	IETS-01-S05	PK3	10
		12	IETS-01-S06	CM2	10
A1-2	Tapered galvanized steel lamp post H=5000 mm. complete with 2 A 250 V plug fuse, 20 A 500 V terminal block for accepting 4 sq.mm. of incoming and outgoing cables and anchor bolts as per Dwg. No. ST-LP-0-03 and SD-AB-0-01	2	IETS-01-S03	RN	10

DRAFT

INVITATION TO BID NO. IETS-LPLC-TIEC-NPUP-MC1-01

Delivery Schedule and Distribution List

Work Plan to Improve the Electricity Supply Model for High Voltage Substation to Enhance the Transmission System Stability and Reliability

Schedule A2 : Solar Lighting Fixture

Item No.	Description	Qty	Job no.	Substation	Delivery Required by EGAT (within months after confirmation of Letter of Award of Contract)
					CFR Thai Port / Ex-works / DDP EGAT's Store
A2-1	Solar lighting fixture for fence and access road, LED, All in one type as per Dwg. No. LT-FX-0-03	9	IETS-01-S04	CP	10
A2-2	Tapered galvanized steel lamp post H=4500 mm. complete with anchor bolts as per Dwg. No. ST-LP-0-03 and SD-AB-0-01	9	IETS-01-S04	CP	10

DRAFT

INVITATION TO BID NO. IETS-LPLC-TIEC-NPUP-MC1-01

Delivery Schedule and Distribution List

Work Plan to Improve the Electricity Supply Model for High Voltage Substation to Enhance the Transmission System Stability and Reliability

Schedule A3 : Aluminum Tube

Item No.	Description	Qty	Job no.	Substation	Delivery Required by EGAT (within months after confirmation of Letter of Award of Contract)
					CFR Thai Port / Ex-works / DDP EGAT's Store
A3-1	Aluminum tube 3.0" IPS Sch.40, 6 meters long	165	IETS-01-S06	CM2	10
A3-2	Aluminum tube 5.0" IPS Sch.40, 6 meters long	75	IETS-01-S03	RN	10

DRAFT

INVITATION TO BID NO. IETS-LPLC-TIEC-NPUP-MC1-01

Delivery Schedule and Distribution List

Work Plan to Improve the Electricity Supply Model for High Voltage Substation to Enhance the Transmission System Stability and Reliability

Schedule A4 : Compression Connector and Miscellaneous Hardware

Item No.	Description	Qty	Job no.	Substation	Delivery Required by EGAT (within months after confirmation of Letter of Award of Contract)
					CFR Thai Port / Ex-works / DDP EGAT's Store
A4-1	Strain clamp for 3/8 inch diameter galvanized steel OHG wire ,PLP Cat. No.A3DD4749T or equal (Legend No.12.21)	5	IETS-01-S01	UD1	10
		10	IETS-01-S02	NBL	10
		5	IETS-01-S03	RN	10
		15	IETS-01-S04	CP	10
		10	IETS-01-S05	PK3	10
A4-2	Compression terminal for 1272 MCM ACSR, straight type, four holes NEMA pad without mounting bolt ,PLP Cat. No.A4DD17829T or equal (Legend No.16.45)	55	IETS-01-S01	UD1	10
		30	IETS-01-S02	NBL	10
		20	IETS-01-S03	RN	10
		20	IETS-01-S04	CP	10
		25	IETS-01-S05	PK3	10
		50	IETS-01-S06	CM2	10
A4-3	Compression tee for 1272 MCM ACSR, four holes NEMA pad ,PLP Cat. No.A4DD16883T or equal (Legend No.17.43)	40	IETS-01-S01	UD1	10
		25	IETS-01-S02	NBL	10
		10	IETS-01-S03	RN	10
		15	IETS-01-S04	CP	10
		10	IETS-01-S05	PK3	10

DRAFT

INVITATION TO BID NO. IETS-LPLC-TIEC-NPUP-MC1-01

Delivery Schedule and Distribution List

Work Plan to Improve the Electricity Supply Model for High Voltage Substation to Enhance the Transmission System Stability and Reliability

Schedule A4 : Compression Connector and Miscellaneous Hardware

Item No.	Description	Qty	Job no.	Substation	Delivery Required by EGAT (within months after confirmation of Letter of Award of Contract)
					CFR Thai Port / Ex-works / DDP EGAT's Store
A4-4	Compression dead end for 1272 MCM ACSR, with non-adjustable clevis bolts, nuts and cotter key, four holes NEMA tap pad ,PLP Cat. No.A4DD16227T or equal (Legend No.24.15)	55	IETS-01-S01	UD1	10
		20	IETS-01-S02	NBL	10
		15	IETS-01-S03	RN	10
		15	IETS-01-S04	CP	10
		10	IETS-01-S05	PK3	10
		80	IETS-01-S06	CM2	10
A4-5	Cable clamp for 3/8 inch diameter galvanized steel OHG wire, run to flat surface ,PLP Cat. No.A4DD3792T or equal (Legend No.46.61)	5	IETS-01-S01	UD1	10
		10	IETS-01-S02	NBL	10
		5	IETS-01-S03	RN	10
		15	IETS-01-S04	CP	10
		10	IETS-01-S05	PK3	10
A4-6	Ball clevis 16 mm. ,PLP Cat. No.A4DD08248T or equal (Legend No.80.01)	35	IETS-01-S06	CM2	10

DRAFT

INVITATION TO BID NO. IETS-LPLC-TIEC-NPUP-MC1-01

Delivery Schedule and Distribution List

Work Plan to Improve the Electricity Supply Model for High Voltage Substation to Enhance the Transmission System Stability and Reliability

Schedule A4 : Compression Connector and Miscellaneous Hardware

Item No.	Description	Qty	Job no.	Substation	Delivery Required by EGAT (within months after confirmation of Letter of Award of Contract)
					CFR Thai Port / Ex-works / DDP EGAT's Store
A4-7	Ball eye 16 mm. ,PLP Cat. No.A4DD1114T or equal (Legend No.80.06)	30	IETS-01-S01	UD1	10
		20	IETS-01-S02	NBL	10
		10	IETS-01-S03	RN	10
		15	IETS-01-S04	CP	10
		15	IETS-01-S05	PK3	10
		50	IETS-01-S06	CM2	10
A4-8	Socket clevis 16 mm. ,PLP Cat. No.A4DD10476T or equal (Legend No.80.11)	25	IETS-01-S01	UD1	10
		10	IETS-01-S02	NBL	10
		10	IETS-01-S03	RN	10
		10	IETS-01-S04	CP	10
A4-9	Socket eye with 19 mm. boss ,PLP Cat. No.A4DD17834T or equal (Legend No.80.16)	10	IETS-01-S02	NBL	10
		10	IETS-01-S05	PK3	10
		50	IETS-01-S06	CM2	10
A4-10	Socket eye with 16 mm. boss ,PLP Cat. No.A4DD17835T or equal (Legend No.80.17)	5	IETS-01-S02	NBL	10
		5	IETS-01-S03	RN	10
		10	IETS-01-S04	CP	10
		5	IETS-01-S05	PK3	10

DRAFT

INVITATION TO BID NO. IETS-LPLC-TIEC-NPUP-MC1-01

Delivery Schedule and Distribution List

Work Plan to Improve the Electricity Supply Model for High Voltage Substation to Enhance the Transmission System Stability and Reliability

Schedule A4 : Compression Connector and Miscellaneous Hardware

Item No.	Description	Qty	Job no.	Substation	Delivery Required by EGAT (within months after confirmation of Letter of Award of Contract)
					CFR Thai Port / Ex-works / DDP EGAT's Store
A4-11	Twisted clevis tongue 20 mm. ,PLP Cat. No.A4DD17798T or equal (Legend No.80.23)	55	IETS-01-S01	UD1	10
		20	IETS-01-S02	NBL	10
		15	IETS-01-S03	RN	10
		15	IETS-01-S04	CP	10
		10	IETS-01-S05	PK3	10
		50	IETS-01-S06	CM2	10
A4-12	Bow shackle 16 mm. ,PLP Cat. No.A4DD14164T or equal (Legend No.80.31)	25	IETS-01-S01	UD1	10
		20	IETS-01-S02	NBL	10
		15	IETS-01-S03	RN	10
		20	IETS-01-S04	CP	10
		20	IETS-01-S05	PK3	10
		50	IETS-01-S06	CM2	10
A4-13	Turnbuckle clevis-clevis 3/4 x 12 inch size and take up ,PLP Cat. No.A4DD17520T or equal (Legend No.80.36)	15	IETS-01-S01	UD1	10
		10	IETS-01-S02	NBL	10
		5	IETS-01-S03	RN	10
		5	IETS-01-S04	CP	10
		5	IETS-01-S05	PK3	10

DRAFT

INVITATION TO BID NO. IETS-LPLC-TIEC-NPUP-MC1-01

Delivery Schedule and Distribution List

Work Plan to Improve the Electricity Supply Model for High Voltage Substation to Enhance the Transmission System Stability and Reliability

Schedule A4 : Compression Connector and Miscellaneous Hardware

Item No.	Description	Qty	Job no.	Substation	Delivery Required by EGAT (within months after confirmation of Letter of Award of Contract)
					CFR Thai Port / Ex-works / DDP EGAT's Store
A4-14	Turnbuckle clevis-eye 5/8 x 12 inch size and take up ,PLP Cat. No.A4DD17880T or equal (Legend No.80.38)	5	IETS-01-S01	UD1	10
		5	IETS-01-S02	NBL	10
		5	IETS-01-S03	RN	10
		10	IETS-01-S04	CP	10
		5	IETS-01-S05	PK3	10
A4-15	Turnbuckle eye-eye 3/4 x 12 inch size and take up ,PLP Cat. No.A4DD17521T or equal (Legend No.80.39)	35	IETS-01-S06	CM2	10
A4-16	Strain yoke plate 200 mm. spacing 18 mm. hole ,PLP Cat. No.A4DD10569T or equal (Legend No.80.41)	30	IETS-01-S01	UD1	10
		10	IETS-01-S02	NBL	10
		10	IETS-01-S03	RN	10
		10	IETS-01-S04	CP	10
A4-17	3.5 inch sub-base 5 inch bc on top and bottom ,PLP Cat. No.A4DD17490T or equal (Legend No.80.51)	25	IETS-01-S01	UD1	10
		115	IETS-01-S02	NBL	10
		95	IETS-01-S03	RN	10
		70	IETS-01-S04	CP	10
		5	IETS-01-S05	PK3	10

DRAFT

INVITATION TO BID NO. IETS-LPLC-TIEC-NPUP-MC1-01

Delivery Schedule and Distribution List

Work Plan to Improve the Electricity Supply Model for High Voltage Substation to Enhance the Transmission System Stability and Reliability

Schedule A4 : Compression Connector and Miscellaneous Hardware

Item No.	Description	Qty	Job no.	Substation	Delivery Required by EGAT (within months after confirmation of Letter of Award of Contract)
					CFR Thai Port / Ex-works / DDP EGAT's Store
A4-18	Galvanized steel bolt, M16, 50 mm. long ,EGAT Cat. No.SD-AB-0-01 or equal (Legend No.90.31)	85	IETS-01-S01	UD1	10
		445	IETS-01-S02	NBL	10
		375	IETS-01-S03	RN	10
		275	IETS-01-S04	CP	10
A4-19	Galvanized steel bolt, M16, 55 mm. long ,EGAT Cat. No.SD-AB-0-01 or equal (Legend No.90.32)	15	IETS-01-S05	PK3	10
A4-20	Galvanized steel nut for M16 bolt ,EGAT Cat. No.SD-AB-0-01 or equal (Legend No.90.36)	85	IETS-01-S01	UD1	10
		445	IETS-01-S02	NBL	10
		375	IETS-01-S03	RN	10
		275	IETS-01-S04	CP	10
		15	IETS-01-S05	PK3	10
A4-21	Galvanized steel spring washer for M16 bolt ,EGAT Cat. No.SD-AB-0-01 or equal (Legend No.90.46)	85	IETS-01-S01	UD1	10
		445	IETS-01-S02	NBL	10
		375	IETS-01-S03	RN	10
		275	IETS-01-S04	CP	10
		15	IETS-01-S05	PK3	10

DRAFT

INVITATION TO BID NO. IETS-LPLC-TIEC-NPUP-MC1-01

Delivery Schedule and Distribution List

Work Plan to Improve the Electricity Supply Model for High Voltage Substation to Enhance the Transmission System Stability and Reliability

Schedule A5 : 230 kV and below Bus Fitting

Item No.	Description	Qty	Job no.	Substation	Delivery Required by EGAT (within months after confirmation of Letter of Award of Contract)
					CFR Thai Port / Ex-works / DDP EGAT's Store
A5-1	Tubular bus suspension clamp, ball socket type (ANSI C29.2, type B) for 3 inch IPS aluminum tube ,Burndy Cat. No.CHS20A or equal (Legend No.12.55)	5	IETS-01-S01	UD1	10
		35	IETS-01-S06	CM2	10
A5-2	Bus support clamp, with 5 inch bc fitting for 1272 MCM ACSR ,Burndy Cat. No.UHKR16A-5B or equal (Legend No.13.45) (Hardware for fixing to base of insulator shall comprise of 5/8 inch-11 UNC bolt and split lockwashers for bolt size 5/8 inch, the length of bolt shall be 35 mm)	10	IETS-01-S02	NBL	10
		5	IETS-01-S05	PK3	10
A5-3	Bus support clamp, with 3 inch bc fitting for 2x1272 MCM ACSR ,Burndy Cat. No.U2HKR16A-3B or equal (Legend No.13.73) (Hardware for fixing to base of insulator shall comprise of 1/2 inch-13 UNC bolt and split lockwashers, the length of bolt shall be 30 mm)	5	IETS-01-S01	UD1	10
A5-4	Bus support, with 5 inch bc fitting for 2 inch IPS aluminum tube, slip or rigid fit ,Burndy Cat. No.WOH18A-5B or equal (Legend No.15.43) (Hardware for fixing to base of insulator shall comprise of 5/8 inch-11 UNC bolt and split lockwashers for bolt size 5/8 inch, the length of bolt shall be 35 mm)	45	IETS-01-S02	NBL	10

DRAFT

INVITATION TO BID NO. IETS-LPLC-TIEC-NPUP-MC1-01

Delivery Schedule and Distribution List

Work Plan to Improve the Electricity Supply Model for High Voltage Substation to Enhance the Transmission System Stability and Reliability

Schedule A5 : 230 kV and below Bus Fitting

Item No.	Description	Qty	Job no.	Substation	Delivery Required by EGAT (within months after confirmation of Letter of Award of Contract)
					CFR Thai Port / Ex-works / DDP EGAT's Store
A5-5	Bus support, with 5 inch bc fitting for 3 inch IPS aluminum tube, slip or rigid fit ,Burndy Cat. No.WOH20A-5B or equal (Legend No.15.45) (Hardware for fixing to base of insulator shall comprise of 5/8 inch-11 UNC bolt and split lockwashers for bolt size 5/8 inch, the length of bolt shall be 35 mm)	25	IETS-01-S01	UD1	10
		60	IETS-01-S02	NBL	10
		15	IETS-01-S03	RN	10
		10	IETS-01-S04	CP	10
A5-6	Bus support, with 5 inch bc fitting for 5 inch IPS aluminum tube, slip or rigid fit ,Burndy Cat. No.WOH24A-5B or equal (Legend No.15.47) (Hardware for fixing to base of insulator shall comprise of 5/8 inch-11 UNC bolt and split lockwashers for bolt size 5/8 inch, the length of bolt shall be 35 mm)	75	IETS-01-S03	RN	10
		55	IETS-01-S04	CP	10
A5-7	Expansion bus support coupler, weld type with 5 inch bc fitting for 3 inch IPS Sch.40 aluminum tube, supplied with end cap ,Burndy Cat. No.WXHP20A-5B-SG or equal (Legend No.15.55)	5	IETS-01-S02	NBL	10
A5-8	Expansion bus support coupler, weld type with 5 inch bc fitting for 5 inch IPS Sch.40 aluminum tube, supplied with end cap ,Burndy Cat. No.WXHP24A-5B-SG5 or equal (Legend No.15.57)	10	IETS-01-S03	RN	10
		5	IETS-01-S04	CP	10
A5-9	Terminal connector, weld type for 4x1272 MCM ACSR (Parallel), six holes ,Burndy Cat. No.W4A54R-6N-SG or equal (Legend No.28.48)	20	IETS-01-S05	PK3	10

DRAFT

INVITATION TO BID NO. IETS-LPLC-TIEC-NPUP-MC1-01

Delivery Schedule and Distribution List

Work Plan to Improve the Electricity Supply Model for High Voltage Substation to Enhance the Transmission System Stability and Reliability

Schedule A5 : 230 kV and below Bus Fitting

Item No.	Description	Qty	Job no.	Substation	Delivery Required by EGAT (within months after confirmation of Letter of Award of Contract)
					CFR Thai Port / Ex-works / DDP EGAT's Store
A5-10	Terminal connector, weld type for 2x1272 MCM ACSR ,Burndy Cat. No.W2A54R-4N or equal (Legend No.28.63)	50	IETS-01-S01	UD1	10
		40	IETS-01-S02	NBL	10
		50	IETS-01-S03	RN	10
		35	IETS-01-S04	CP	10
		10	IETS-01-S05	PK3	10
		400	IETS-01-S06	CM2	10
A5-11	Terminal connector, weld type for 477 MCM ACSR ,Burndy Cat. No.WA41R-4N or equal (Legend No.29.81)	5	IETS-01-S03	RN	10
A5-12	Terminal connector, weld type for 1272 MCM ACSR ,Burndy Cat. No.WA54R-4N or equal (Legend No.29.83)	40	IETS-01-S01	UD1	10
		60	IETS-01-S02	NBL	10
		20	IETS-01-S03	RN	10
		20	IETS-01-S04	CP	10
		20	IETS-01-S05	PK3	10
		140	IETS-01-S06	CM2	10
A5-13	Terminal connector, weld type for 2 inch IPS Sch.40 aluminum tube, four holes ,Burndy Cat. No.SWAC18A-34N or equal (Legend No.30.03)	20	IETS-01-S02	NBL	10
A5-14	Terminal connector, weld type for 3 inch IPS Sch.40 aluminum tube, four holes ,Burndy Cat. No.SWAC20A-34N-SG or equal (Legend No.30.05)	10	IETS-01-S01	UD1	10
		15	IETS-01-S02	NBL	10
		20	IETS-01-S03	RN	10
		15	IETS-01-S04	CP	10
		100	IETS-01-S06	CM2	10

DRAFT

INVITATION TO BID NO. IETS-LPLC-TIEC-NPUP-MC1-01

Delivery Schedule and Distribution List

Work Plan to Improve the Electricity Supply Model for High Voltage Substation to Enhance the Transmission System Stability and Reliability

Schedule A5 : 230 kV and below Bus Fitting

Item No.	Description	Qty	Job no.	Substation	Delivery Required by EGAT (within months after confirmation of Letter of Award of Contract) CFR Thai Port / Ex-works / DDP EGAT's Store
A5-15	Terminal connector, weld type for 5 inch IPS Sch.40 aluminum tube, four holes ,Burndy Cat. No.SWAC24A-44N or equal (Legend No.30.07)	30	IETS-01-S03	RN	10
		20	IETS-01-S04	CP	10
A5-16	Expansion terminal connector, weld type for 3 inch IPS Sch.40 aluminum tube, four holes ,Burndy Cat. No.WXA20A-4N-SG4 or equal (Legend No.30.15)	10	IETS-01-S01	UD1	10
		10	IETS-01-S03	RN	10
		35	IETS-01-S06	CM2	10
A5-17	Connector angle " T ", weld type for 2 inch IPS aluminum tube run to 80 degree 2 inch IPS aluminum tube tap ,Burndy Cat. No.SWT18A18A-80 or equal (Legend No.39.07)	35	IETS-01-S02	NBL	10
A5-18	Connector angle " T ", weld type for 3 inch IPS aluminum tube run to 80 degree 3 inch IPS aluminum tube tap ,Burndy Cat. No.SWT20A20A-80 or equal (Legend No.39.29)	10	IETS-01-S02	NBL	10
		20	IETS-01-S03	RN	10
		15	IETS-01-S04	CP	10
		70	IETS-01-S06	CM2	10
A5-19	Connector angle " T ", weld type for 5 inch IPS aluminum tube run to 80 degree 3 inch IPS aluminum tube tap ,Burndy Cat. No.SWT24A20A-80 or equal (Legend No.39.48)	30	IETS-01-S03	RN	10
		30	IETS-01-S04	CP	10
A5-20	Connector " V ", weld type for 2 inch IPS aluminum tube run to 20 degree 2 inch IPS aluminum tube tap ,Burndy Cat. No.SWAT18A18A-20 or equal (Legend No.41.13)	5	IETS-01-S02	NBL	10

DRAFT

INVITATION TO BID NO. IETS-LPLC-TIEC-NPUP-MC1-01

Delivery Schedule and Distribution List

Work Plan to Improve the Electricity Supply Model for High Voltage Substation to Enhance the Transmission System Stability and Reliability

Schedule A5 : 230 kV and below Bus Fitting

Item No.	Description	Qty	Job no.	Substation	Delivery Required by EGAT (within months after confirmation of Letter of Award of Contract)
					CFR Thai Port / Ex-works / DDP EGAT's Store
A5-21	Connector " V ", weld type for 3 inch IPS aluminum tube run to 20 degree 2 inch IPS aluminum tube tap ,Burndy Cat. No.SWAT20A18A-20 or equal (Legend No.41.32)	15	IETS-01-S02	NBL	10
A5-22	Connector " V ", weld type for 3 inch IPS aluminum tube run to 20 degree 3 inch IPS aluminum tube tap ,Burndy Cat. No.SWAT20A20A-20 or equal (Legend No.41.34)	5	IETS-01-S02	NBL	10
		20	IETS-01-S03	RN	10
		10	IETS-01-S04	CP	10
A5-23	Connector " V ", weld type for 5 inch IPS aluminum tube run to 20 degree 3 inch IPS aluminum tube tap ,Burndy Cat. No.SWAT24A20A-20 or equal (Legend No.41.53)	30	IETS-01-S03	RN	10
		15	IETS-01-S04	CP	10
		35	IETS-01-S06	CM2	10
A5-24	Bar tap, weld type for 3 inch IPS aluminum tube to four holes NEMA pad ,Burndy Cat. No.SWAB20A-4N or equal (Legend No.42.04)	25	IETS-01-S01	UD1	10
		10	IETS-01-S02	NBL	10
		70	IETS-01-S06	CM2	10
A5-25	Bar tap, weld type for 5 inch IPS aluminum tube to four holes NEMA pad ,Burndy Cat. No.SWAB24A-4N or equal (Legend No.42.06)	15	IETS-01-S03	RN	10
		5	IETS-01-S04	CP	10
		5	IETS-01-S05	PK3	10
		5	IETS-01-S06	CM2	10
A5-26	Coupler, weld type for 2 inch IPS Sch.40 aluminum tube ,Burndy Cat. No.WS18A-F or equal (Legend No.44.02)	45	IETS-01-S02	NBL	10

DRAFT

INVITATION TO BID NO. IETS-LPLC-TIEC-NPUP-MC1-01

Delivery Schedule and Distribution List

Work Plan to Improve the Electricity Supply Model for High Voltage Substation to Enhance the Transmission System Stability and Reliability

Schedule A5 : 230 kV and below Bus Fitting

Item No.	Description	Qty	Job no.	Substation	Delivery Required by EGAT (within months after confirmation of Letter of Award of Contract)
					CFR Thai Port / Ex-works / DDP EGAT's Store
A5-27	Coupler, weld type for 3 inch IPS Sch.40 aluminum tube ,Burndy Cat. No.WS20A-F or equal (Legend No.44.04)	80	IETS-01-S02	NBL	10
		5	IETS-01-S03	RN	10
		35	IETS-01-S04	CP	10
		35	IETS-01-S06	CM2	10
A5-28	Coupler, weld type for 5 inch IPS Sch.40 aluminum tube ,Burndy Cat. No.WS24A-F or equal (Legend No.44.06)	80	IETS-01-S03	RN	10
		75	IETS-01-S04	CP	10
		50	IETS-01-S06	CM2	10
A5-29	Corona bell, internal type for 2 inch IPS Sch.40 aluminum tube ,Burndy Cat. No.LB18A or equal (Legend No.45.54)	20	IETS-01-S02	NBL	10
A5-30	Corona bell, internal type for 3 inch IPS Sch.40 aluminum tube ,Burndy Cat. No.LB20A or equal (Legend No.45.56)	10	IETS-01-S01	UD1	10
		10	IETS-01-S02	NBL	10
		10	IETS-01-S03	RN	10
		10	IETS-01-S04	CP	10
		35	IETS-01-S06	CM2	10
A5-31	Corona bell, internal type for 5 inch IPS Sch.40 aluminum tube ,Burndy Cat. No.LB24A or equal (Legend No.45.58)	20	IETS-01-S03	RN	10
		20	IETS-01-S04	CP	10
		10	IETS-01-S06	CM2	10

DRAFT

INVITATION TO BID NO. IETS-LPLC-TIEC-NPUP-MC1-01

Delivery Schedule and Distribution List

Work Plan to Improve the Electricity Supply Model for High Voltage Substation to Enhance the Transmission System Stability and Reliability

Schedule A5 : 230 kV and below Bus Fitting

Item No.	Description	Qty	Job no.	Substation	Delivery Required by EGAT (within months after confirmation of Letter of Award of Contract)
					CFR Thai Port / Ex-works / DDP EGAT's Store
A5-32	Spacer connector for 2x1272 MCM ACSR, distance between conductor center 100 mm. ,Burndy Cat. No.S2GBP46A-10 or equal (Legend No.47.05)	35	IETS-01-S01	UD1	10
		20	IETS-01-S02	NBL	10
		15	IETS-01-S03	RN	10
		20	IETS-01-S04	CP	10
		10	IETS-01-S05	PK3	10
		200	IETS-01-S06	CM2	10
A5-33	Spacer connector for 2x1272 MCM ACSR, distance between conductor center 200 mm. ,Burndy Cat. No.S2GBP46A-20 or equal (Legend No.47.15)	30	IETS-01-S01	UD1	10
		10	IETS-01-S02	NBL	10
		10	IETS-01-S03	RN	10
		10	IETS-01-S04	CP	10
A5-34	Spacer connector for 4x1272 MCM ACSR (Parallel), distance between conductor center 100 mm. ,Burndy Cat. No.N4P46A-SG or equal (Legend No.47.21)	10	IETS-01-S05	PK3	10
A5-35	Stainless steel hexagon head bolts, 0.5-13 inch, 2.5 inch long fully threaded and manufactures of series 18-8 material, coarse thread series class 2A tolerance ,Burndy Cat. No.50x250 HSSB or equal (Legend No.90.51)	225	IETS-01-S01	UD1	10
		360	IETS-01-S02	NBL	10
		215	IETS-01-S03	RN	10
		185	IETS-01-S04	CP	10
		195	IETS-01-S05	PK3	10
		675	IETS-01-S06	CM2	10

DRAFT

INVITATION TO BID NO. IETS-LPLC-TIEC-NPUP-MC1-01

Delivery Schedule and Distribution List

Work Plan to Improve the Electricity Supply Model for High Voltage Substation to Enhance the Transmission System Stability and Reliability

Schedule A5 : 230 kV and below Bus Fitting

Item No.	Description	Qty	Job no.	Substation	Delivery Required by EGAT (within months after confirmation of Letter of Award of Contract)
					CFR Thai Port / Ex-works / DDP EGAT's Store
A5-36	Stainless steel hexagon head bolts, 0.5-13 inch, 3.5 inch long fully threaded and manufactures of series 18-8 material, coarse thread series class 2A tolerance ,Burndy Cat. No.50x350 HSSB or equal (Legend No.90.52)	55	IETS-01-S01	UD1	10
		80	IETS-01-S03	RN	10
		80	IETS-01-S04	CP	10
		60	IETS-01-S05	PK3	10
		530	IETS-01-S06	CM2	10
A5-37	Stainless steel hexagon head bolts, 0.5-13 inch, 3.0 inch long fully threaded and manufactures of series 18-8 material, coarse thread series class 2A tolerance ,Burndy Cat. No.50x300 HSSB or equal (Legend No.90.54)	135	IETS-01-S01	UD1	10
		110	IETS-01-S02	NBL	10
		140	IETS-01-S03	RN	10
		160	IETS-01-S04	CP	10
		40	IETS-01-S05	PK3	10
		1585	IETS-01-S06	CM2	10
A5-38	Stainless steel hexagon nuts manufactures of series 18-8 material finish type, coarse thread series class 2B fit for 0.5-13 inch bolts size ,Burndy Cat. No.50 HSSN or equal (Legend No.90.61)	410	IETS-01-S01	UD1	10
		465	IETS-01-S02	NBL	10
		410	IETS-01-S03	RN	10
		425	IETS-01-S04	CP	10
		295	IETS-01-S05	PK3	10
		2790	IETS-01-S06	CM2	10

DRAFT

INVITATION TO BID NO. IETS-LPLC-TIEC-NPUP-MC1-01

Delivery Schedule and Distribution List

Work Plan to Improve the Electricity Supply Model for High Voltage Substation to Enhance the Transmission System Stability and Reliability

Schedule A5 : 230 kV and below Bus Fitting

Item No.	Description	Qty	Job no.	Substation	Delivery Required by EGAT (within months after confirmation of Letter of Award of Contract)
					CFR Thai Port / Ex-works / DDP EGAT's Store
A5-39	Stainless steel flat washers manufactures of 18-8 material and of medium design 1.125 inch O.D., 0.594 inch I.D., and 0.125 inch thickness ,Burndy Cat. No.50 FWSS or equal (Legend No.90.66)	820	IETS-01-S01	UD1	10
		925	IETS-01-S02	NBL	10
		820	IETS-01-S03	RN	10
		845	IETS-01-S04	CP	10
		590	IETS-01-S05	PK3	10
		5575	IETS-01-S06	CM2	10
A5-40	Stainless steel belleville washers manufactures of alloy 301, 302 or 18-8 materials, 1.06 inch O.D., 0.530 inch I.D., 0.095 inch thickness ,Burndy Cat. No.50x106 BWSS or equal (Legend No.90.76)	410	IETS-01-S01	UD1	10
		465	IETS-01-S02	NBL	10
		410	IETS-01-S03	RN	10
		425	IETS-01-S04	CP	10
		295	IETS-01-S05	PK3	10
		2790	IETS-01-S06	CM2	10
A5-41	Aluminum joint compound in 8-oz bottles ,Burndy Cat. No.P8A or equal (Legend No.90.91)	15	IETS-01-S01	UD1	10
		20	IETS-01-S02	NBL	10
		15	IETS-01-S03	RN	10
		10	IETS-01-S04	CP	10
		10	IETS-01-S05	PK3	10
		80	IETS-01-S06	CM2	10

Thai Port = BKK Port

DRAFT

INVITATION TO BID NO. IETS-LPLC-TIEC-NPUP-MC1-01

Delivery Schedule and Distribution List

Work Plan to Improve the Electricity Supply Model for High Voltage Substation to Enhance the Transmission System Stability and Reliability

Schedule A6 : Grounding Material

Item No.	Description	Qty	Job no.	Substation	Delivery Required by EGAT (within months after confirmation of Letter of Award of Contract)
					CFR Thai Port / Ex-works / DDP EGAT's Store
A6-1	Ground rod size 5/8 inch diameter x 10 feet	33	IETS-01-S03	RN	10
		33	IETS-01-S04	CP	10
A6-2	Exothermic welding mold for connecting copper weld ground rod size 5/8 inch diameter to copper ground wire no. 4/0 AWG ,Kumwell Cat. No.CR2-C-5/84/0 or equal (Legend No.60.02)	1	IETS-01-S03	RN	10
		2	IETS-01-S04	CP	10
A6-3	Exothermic welding mold for connecting horizontal cable of no. 4/0 AWG run to horizontal through cable of no. 4/0 AWG copper ground wire tap ,Kumwell Cat. No.CC2-C-4/04/0 or equal (Legend No.60.03)	3	IETS-01-S01	UD1	10
		8	IETS-01-S02	NBL	10
		8	IETS-01-S03	RN	10
		8	IETS-01-S04	CP	10
		3	IETS-01-S05	PK3	10
		25	IETS-01-S06	CM2	10

DRAFT

INVITATION TO BID NO. IETS-LPLC-TIEC-NPUP-MC1-01

Delivery Schedule and Distribution List

Work Plan to Improve the Electricity Supply Model for High Voltage Substation to Enhance the Transmission System Stability and Reliability

Schedule A6 : Grounding Material

Item No.	Description	Qty	Job no.	Substation	Delivery Required by EGAT (within months after confirmation of Letter of Award of Contract)
					CFR Thai Port / Ex-works / DDP EGAT's Store
A6-4	Exothermic welding mold for connecting angular cable drop of no. 4/0 AWG copper ground wire to vertical steel flat surface ,Kumwell Cat. No.CS3-Y-4/0 or equal (Legend No.60.04)	2	IETS-01-S01	UD1	10
		7	IETS-01-S02	NBL	10
		5	IETS-01-S03	RN	10
		5	IETS-01-S04	CP	10
		1	IETS-01-S05	PK3	10
		9	IETS-01-S06	CM2	10
A6-5	Exothermic welding mold for connecting angular cable drop of no. 4/0 AWG copper ground wire to vertical steel pipe 2-4 inch diameter ,Kumwell Cat. No.CP1-X-4/0 or equal (Legend No.60.05)	1	IETS-01-S02	NBL	10
		1	IETS-01-S03	RN	10
		1	IETS-01-S04	CP	10

DRAFT

INVITATION TO BID NO. IETS-LPLC-TIEC-NPUP-MC1-01

Delivery Schedule and Distribution List

Work Plan to Improve the Electricity Supply Model for High Voltage Substation to Enhance the Transmission System Stability and Reliability

Schedule A6 : Grounding Material

Item No.	Description	Qty	Job no.	Substation	Delivery Required by EGAT (within months after confirmation of Letter of Award of Contract)
					CFR Thai Port / Ex-works / DDP EGAT's Store
A6-6	Exothermic welding mold for connecting horizontal to horizontal cable cross of no. 4/0 AWG copper ground wire tap cable, cut cable in same plane ,Kumwell Cat. No.CC4-C-4/04/0 or equal (Legend No.60.06)	1	IETS-01-S03	RN	10
		1	IETS-01-S04	CP	10
A6-7	Exothermic welding mold for connecting cable of no. 4/0 AWG copper ground wire vertical through to steel flat surface ,Kumwell Cat. No.CS4-Y-4/0 or equal (Legend No.60.07)	2	IETS-01-S01	UD1	10
		4	IETS-01-S02	NBL	10
		5	IETS-01-S03	RN	10
		4	IETS-01-S04	CP	10
		4	IETS-01-S05	PK3	10
		43	IETS-01-S06	CM2	10
A6-8	Changeable handle clamp ,Kumwell Cat. No.HCC00-XY or equal (Legend No.60.09)	1	IETS-01-S01	UD1	10
		2	IETS-01-S02	NBL	10
		2	IETS-01-S03	RN	10
		2	IETS-01-S04	CP	10
		1	IETS-01-S05	PK3	10
		8	IETS-01-S06	CM2	10

DRAFT

INVITATION TO BID NO. IETS-LPLC-TIEC-NPUP-MC1-01

Delivery Schedule and Distribution List

Work Plan to Improve the Electricity Supply Model for High Voltage Substation to Enhance the Transmission System Stability and Reliability

Schedule A6 : Grounding Material

Item No.	Description	Qty	Job no.	Substation	Delivery Required by EGAT (within months after confirmation of Letter of Award of Contract)
					CFR Thai Port / Ex-works / DDP EGAT's Store
A6-9	Welding powder cartridges for mold ,Kumwell Cat. No.CR2-C-5/84/0 or equal (Legend No.60.10)	7	IETS-01-S03	RN	10
A6-10	Welding powder cartridges for mold ,Kumwell Cat. No.CC2-C-4/04/0 or equal (Legend No.60.11)	81	IETS-01-S01	UD1	10
		236	IETS-01-S02	NBL	10
		224	IETS-01-S03	RN	10
		224	IETS-01-S04	CP	10
		61	IETS-01-S05	PK3	10
		721	IETS-01-S06	CM2	10
A6-11	Welding powder cartridges for mold ,Kumwell Cat. No.CS3-Y-4/0 or equal (Legend No.60.12)	50	IETS-01-S01	UD1	10
		189	IETS-01-S02	NBL	10
		137	IETS-01-S03	RN	10
		135	IETS-01-S04	CP	10
		3	IETS-01-S05	PK3	10
		260	IETS-01-S06	CM2	10
A6-12	Welding powder cartridges for mold ,Kumwell Cat. No.CP1-X-4/0 or equal (Legend No.60.13)	5	IETS-01-S02	NBL	10
		25	IETS-01-S03	RN	10
		22	IETS-01-S04	CP	10

DRAFT

INVITATION TO BID NO. IETS-LPLC-TIEC-NPUP-MC1-01

Delivery Schedule and Distribution List

Work Plan to Improve the Electricity Supply Model for High Voltage Substation to Enhance the Transmission System Stability and Reliability

Schedule A6 : Grounding Material

Item No.	Description	Qty	Job no.	Substation	Delivery Required by EGAT (within months after confirmation of Letter of Award of Contract)
					CFR Thai Port / Ex-works / DDP EGAT's Store
A6-13	Welding powder cartridges for mold ,Kumwell Cat. No.CC4-C-4/04/0 or equal (Legend No.60.14)	14	IETS-01-S03	RN	10
		17	IETS-01-S04	CP	10
A6-14	Welding powder cartridges for mold ,Kumwell Cat. No.CS4-Y-4/0 or equal (Legend No.60.15)	60	IETS-01-S01	UD1	10
		95	IETS-01-S02	NBL	10
		138	IETS-01-S03	RN	10
		115	IETS-01-S04	CP	10
		110	IETS-01-S05	PK3	10
		1270	IETS-01-S06	CM2	10
A6-15	Tool kit complete set ,Kumwell Cat. No.KTA000 or equal (Legend No.60.17)	1	IETS-01-S01	UD1	10
		2	IETS-01-S02	NBL	10
		2	IETS-01-S03	RN	10
		2	IETS-01-S04	CP	10
		1	IETS-01-S05	PK3	10
		5	IETS-01-S06	CM2	10

DRAFT

INVITATION TO BID NO. IETS-LPLC-TIEC-NPUP-MC1-01

Delivery Schedule and Distribution List

Work Plan to Improve the Electricity Supply Model for High Voltage Substation to Enhance the Transmission System Stability and Reliability

Schedule A6 : Grounding Material

Item No.	Description	Qty	Job no.	Substation	Delivery Required by EGAT (within months after confirmation of Letter of Award of Contract)
					CFR Thai Port / Ex-works / DDP EGAT's Store
A6-16	Flint igniter ,Kumwell Cat. No.KTA014U or equal (Legend No.60.18)	8	IETS-01-S01	UD1	10
		21	IETS-01-S02	NBL	10
		22	IETS-01-S03	RN	10
		22	IETS-01-S04	CP	10
		7	IETS-01-S05	PK3	10
		90	IETS-01-S06	CM2	10
A6-17	Single terminal lug one hole for 4/0 AWG copper ground wire ,Kumwell Cat. No.KGXTEL-4/0 or equal (Legend No.60.19)	2	IETS-01-S03	RN	10
		4	IETS-01-S05	PK3	10
A6-18	Ground connector for 2x4/0 AWG copper ground wire to steel flat surface ,Kumwell Cat. No.GXCCP-G2P or equal (Legend No.60.20d)	7	IETS-01-S01	UD1	10
		7	IETS-01-S02	NBL	10
		9	IETS-01-S03	RN	10
		9	IETS-01-S04	CP	10
		55	IETS-01-S06	CM2	10
A6-19	Flexible copper braid, 14 inch long, 600 A ,Kumwell Cat. No.KGZFCB 39533 or equal (Legend No.60.21)	2	IETS-01-S03	RN	10

Thai Port = BKK Port

DRAFT

INVITATION TO BID NO. IETS-LPLC-TIEC-NPUP-MC1-01

Delivery Schedule and Distribution List

Long-Term Investment Plan to Accommodate Large Power Consumer

Schedule B1 : Aluminum Tube

Item No.	Description	Qty	Job no.	Substation	Delivery Required by EGAT (within months after confirmation of Letter of Award of Contract)
					CFR Thai Port / Ex-works / DDP EGAT's Store
B1-1	Aluminum tube 3.0" IPS Sch.40, 6 meters long	15	LPLC-01-S08	PDG	10
B1-2	Aluminum tube 5.0" IPS Sch.80, 6 meters long	90	LPLC-01-S08	PDG	10
B1-3	Aluminum tube 3.0" IPS Sch.80, 6 meters long	30	LPLC-01-S08	PDG	10

DRAFT

INVITATION TO BID NO. IETS-LPLC-TIEC-NPUP-MC1-01

Delivery Schedule and Distribution List

Long-Term Investment Plan to Accommodate Large Power Consumer

Schedule B2 : Compression Connector and Miscellaneous Hardware

Item No.	Description	Qty	Job no.	Substation	Delivery Required by EGAT (within months after confirmation of Letter of Award of Contract)
					CFR Thai Port / Ex-works / DDP EGAT's Store
B2-1	Aluminum alloy straight compression terminal for 1272 MCM ACSR, four holes NEMA pad ,Lorunser Cat. No.771.059.9 or equal (Legend No.16.45A). In addition, each compression terminal shall be furnished with the following accessories : - Stainless steel bolts, nuts, flat washers and belleville washers - Aluminum alloy streamlined cap for shielding hardware when bolting terminal to flat pad	40	LPLC-01-S08	PDG	10
B2-2	Aluminum alloy quadruple bundle suspension coupler, complete with straight compression terminals for 4x1272 MCM ACSR, bolts, nuts and washers ,Lorunser Cat. No.1FB767-133 or equal (Legend No.17.55A)	10	LPLC-01-S08	PDG	10
B2-3	Strain clamp for 3/8 inch diameter galvanized steel OHG wire ,PLP Cat. No.A3DD4749T or equal (Legend No.12.21)	25	LPLC-01-S08	PDG	10
B2-4	Compression terminal for 1272 MCM ACSR, angle 15 degree type, four holes NEMA pad without mounting bolt ,PLP Cat. No.A4DD16931T or equal (Legend No.16.49)	30	LPLC-01-S08	PDG	10
B2-5	Compression tee for 1272 MCM ACSR, four holes NEMA pad ,PLP Cat. No.A4DD16883T or equal (Legend No.17.43)	10	LPLC-01-S08	PDG	10

DRAFT

INVITATION TO BID NO. IETS-LPLC-TIEC-NPUP-MC1-01

Delivery Schedule and Distribution List

Long-Term Investment Plan to Accommodate Large Power Consumer

Schedule B2 : Compression Connector and Miscellaneous Hardware

Item No.	Description	Qty	Job no.	Substation	Delivery Required by EGAT (within months after confirmation of Letter of Award of Contract)
					CFR Thai Port / Ex-works / DDP EGAT's Store
B2-6	Double T connector for 1272 MCM ACSR, four holes NEMA pad ,PLP Cat. No.A4DD17836T or equal (Legend No.17.55)	15	LPLC-01-S08	PDG	10
B2-7	Compression dead end tension clamp for 1272 MCM ACSR, with non-adjustable clevis bolts, nuts and cotter key ,PLP Cat. No.A4DD08740T or equal (Legend No.24.45)	30	LPLC-01-S08	PDG	10
B2-8	Cable clamp for 3/8 inch diameter galvanized steel OHG wire, run to flat surface ,PLP Cat. No.A4DD3792T or equal (Legend No.46.61)	30	LPLC-01-S08	PDG	10
B2-9	Ball eye 16 mm. ,PLP Cat. No.A4DD1114T or equal (Legend No.80.06)	20	LPLC-01-S08	PDG	10
B2-10	Socket clevis 16 mm. ,PLP Cat. No.A4DD10476T or equal (Legend No.80.11)	10	LPLC-01-S08	PDG	10
B2-11	Socket eye with 16 mm. boss ,PLP Cat. No.A4DD17835T or equal (Legend No.80.17)	15	LPLC-01-S08	PDG	10
B2-12	Twisted clevis tongue 20 mm. ,PLP Cat. No.A4DD17798T or equal (Legend No.80.23)	15	LPLC-01-S08	PDG	10
B2-13	Twisted clevis tongue 16 mm. ,PLP Cat. No.A4DD17730T or equal (Legend No.80.26)	15	LPLC-01-S08	PDG	10
B2-14	Bow shackle 16 mm. ,PLP Cat. No.A4DD14164T or equal (Legend No.80.31)	85	LPLC-01-S08	PDG	10
B2-15	Turnbuckle clevis-eye 5/8 x 12 inch size and take up ,PLP Cat. No.A4DD17880T or equal (Legend No.80.38)	25	LPLC-01-S08	PDG	10

DRAFT

INVITATION TO BID NO. IETS-LPLC-TIEC-NPUP-MC1-01

Delivery Schedule and Distribution List

Long-Term Investment Plan to Accommodate Large Power Consumer

Schedule B2 : Compression Connector and Miscellaneous Hardware

Item No.	Description	Qty	Job no.	Substation	Delivery Required by EGAT (within months after confirmation of Letter of Award of Contract)
					CFR Thai Port / Ex-works / DDP EGAT's Store
B2-16	Strain yoke plate 200 mm. spacing 18 mm. hole ,PLP Cat. No.A4DD10569T or equal (Legend No.80.41)	20	LPLC-01-S08	PDG	10
B2-17	3.5 inch sub-base 5 inch bc on top and bottom ,PLP Cat. No.A4DD17490T or equal (Legend No.80.51)	10	LPLC-01-S08	PDG	10
B2-18	6.0 inch sub-base 3 inch bc on top and bottom ,PLP Cat. No.A4DD17643T or equal (Legend No.80.52)	20	LPLC-01-S08	PDG	10
B2-19	Plate link 19 mm. ,PLP Cat. No.A4DD17828T or equal (Legend No.80.60)	15	LPLC-01-S08	PDG	10
B2-20	U-bolt 20 mm. completed with nuts and washers ,PLP Cat. No.A4DD10547T or equal (Legend No.XX.XX)	10	LPLC-01-S08	PDG	10
B2-21	Galvanized steel bolt, M16, 50 mm. long ,EGAT Cat. No.SD-AB-0-01 or equal (Legend No.90.31)	15	LPLC-01-S08	PDG	10
B2-22	Galvanized steel bolt, M16, 55 mm. long ,EGAT Cat. No.SD-AB-0-01 or equal (Legend No.90.32)	15	LPLC-01-S08	PDG	10
B2-23	Galvanized steel nut for M16 bolt ,EGAT Cat. No.SD-AB-0-01 or equal (Legend No.90.36)	30	LPLC-01-S08	PDG	10
B2-24	Galvanized steel spring washer for M16 bolt ,EGAT Cat. No.SD-AB-0-01 or equal (Legend No.90.46)	30	LPLC-01-S08	PDG	10

DRAFT

INVITATION TO BID NO. IETS-LPLC-TIEC-NPUP-MC1-01

Delivery Schedule and Distribution List

Long-Term Investment Plan to Accommodate Large Power Consumer

Schedule B3 : 500 kV Bus Fitting

Item No.	Description	Qty	Job no.	Substation	Delivery Required by EGAT (within months after confirmation of Letter of Award of Contract)
					CFR Thai Port / Ex-works / DDP EGAT's Store
B3-1	Aluminum alloy quadruple bus support clamp, with 5 inch bc fitting for 4x1272 MCM ACSR ,SubCon Cat. No.BA07343 or equal (Legend No.13.98A)	5	LPLC-01-S08	PDG	10
B3-2	Bus support, with 5 inch bc fitting for 5 inch IPS aluminum tube, slip or rigid fit ,Lorunser Cat. No.1JB008-140 or equal (Legend No.15.47A)	35	LPLC-01-S08	PDG	10
B3-3	Expansion bus support coupler, weld type with 5 inch bc fitting for 5 inch IPS Sch.80 aluminum tube, supplied with end cap ,Lorunser Cat. No.1KA100-141 or equal (Legend No.15.57A)	5	LPLC-01-S08	PDG	10
B3-4	Bus support, with 5 inch bc fitting for 5 inch IPS aluminum tube, rigid fit ,Lorunser Cat. No.1JJ821-141 or equal (Legend No.15.87A)	5	LPLC-01-S08	PDG	10
B3-5	Aluminum alloy quadruple bundle connector with six holes NEMA pad, complete with straight compression terminals for 4x1272 MCM ACSR, bolts, nuts and washers ,Lorunser Cat. No.3-19019/1E or equal (Legend No.28.93A). In addition, aluminum alloy streamlined cap for shielding hardware when bolting terminal to flat pad shall be provided.	75	LPLC-01-S08	PDG	10

DRAFT

INVITATION TO BID NO. IETS-LPLC-TIEC-NPUP-MC1-01

Delivery Schedule and Distribution List

Long-Term Investment Plan to Accommodate Large Power Consumer

Schedule B3 : 500 kV Bus Fitting

Item No.	Description	Qty	Job no.	Substation	Delivery Required by EGAT (within months after confirmation of Letter of Award of Contract)
					CFR Thai Port / Ex-works / DDP EGAT's Store
B3-6	Aluminum alloy quadruple bundle connector with six holes NEMA pad, complete with terminal for 4x1272 MCM ACSR, bolts, nuts and washers ,Lorunser Cat. No.3-19019/1B or equal (Legend No.28.95A). In addition, aluminum alloy streamlined cap for shielding hardware when bolting terminal to flat pad shall be provided.	5	LPLC-01-S08	PDG	10
B3-7	Aluminum alloy quadruple bundle connector with six holes NEMA pad, complete with clamp for 4x1272 MCM ACSR (through conductor), bolts, nuts and washers ,Lorunser Cat. No.3-19019/2E or equal (Legend No.28.96A)	20	LPLC-01-S08	PDG	10
B3-8	Aluminum alloy quadruple bundle connector for stud terminal, complete with terminal for 4x1272 MCM ACSR, bolts, nuts and washers ,Lorunser Cat. No.3-19019/3 or equal (Legend No.28.99A)	5	LPLC-01-S08	PDG	10
B3-9	Terminal connector, weld type for 5 inch IPS Sch.80 aluminum tube, six holes NEMA pad included with corona bell end cap external type(EHV) ,Lorunser Cat. No.1CA081-143 or equal (Legend No.30.87A)	10	LPLC-01-S08	PDG	10
B3-10	Connector angle " T ", weld type for 5 inch IPS aluminum tube run to 80 degree 3 inch IPS aluminum tube tap (EHV) ,RIBE Cat. No.BA04353 or equal (Legend No.39.48A)	20	LPLC-01-S08	PDG	10

DRAFT

INVITATION TO BID NO. IETS-LPLC-TIEC-NPUP-MC1-01

Delivery Schedule and Distribution List

Long-Term Investment Plan to Accommodate Large Power Consumer

Schedule B3 : 500 kV Bus Fitting

Item No.	Description	Qty	Job no.	Substation	Delivery Required by EGAT (within months after confirmation of Letter of Award of Contract)
					CFR Thai Port / Ex-works / DDP EGAT's Store
B3-11	Connector " V ", weld type for 5 inch IPS aluminum tube run to 20 degree 3 inch IPS aluminum tube tap (EHV) ,RIBE Cat. No.BA04356 or equal (Legend No.41.53A)	10	LPLC-01-S08	PDG	10
B3-12	Corona bell, external type for 5 inch IPS aluminum tube ,Lorunser Cat. No.1RB100-090 or equal (Legend No.45.93A) (This item shall be used together with legend no. 30.87A)	25	LPLC-01-S08	PDG	10
B3-13	Spacer connector for 2x1272 MCM ACSR, distance between conductor center 200 mm. ,Lorunser Cat. No.1QA102-040 or equal (Legend No.47.15A)	10	LPLC-01-S08	PDG	10
B3-14	Spacer connector for 4x1272 MCM ACSR (Square), distance between conductor center 200 mm. ,RIBE Cat. No.Q4K-203 or equal (Legend No.47.22A)	60	LPLC-01-S08	PDG	10
B3-15	Aluminum alloy portable earth connector for 5 inch IPS aluminum tube ,Lorunser Cat. No.1DG010-163 or equal (Legend No.48.04A)	10	LPLC-01-S08	PDG	10
B3-16	Aluminum alloy portable earth connector for 4x 1272 MCM ACSR (EHV) ,Lorunser Cat. No.1HG407-041 or equal (Legend No.49.56A)	30	LPLC-01-S08	PDG	10

Thai Port = BKK Port

DRAFT

INVITATION TO BID NO. IETS-LPLC-TIEC-NPUP-MC1-01

Delivery Schedule and Distribution List

Long-Term Investment Plan to Accommodate Large Power Consumer

Schedule B4 : 230 kV and below Bus Fitting

Item No.	Description	Qty	Job no.	Substation	Delivery Required by EGAT (within months after confirmation of Letter of Award of Contract)
					CFR Thai Port / Ex-works / DDP EGAT's Store
B4-1	Bus support clamp, with 5 inch bc fitting for 2x1272 MCM ACSR ,Burndy Cat. No.U2HKR16A-5B or equal (Legend No.13.68) (Hardware for fixing to base of insulator shall comprise of 5/8 inch-11 UNC bolt and split lockwashers for bolt size 5/8 inch, the length of bolt shall be 35 mm)	5	LPLC-01-S08	PDG	10
B4-2	Bus support clamp, with 5 inch bc fitting for 4x1272 MCM AAC or ACSR (Parallel) ,Burndy Cat. No.U4HKR16A-5-SG or equal (Legend No.13.98)	5	LPLC-01-S08	PDG	10
B4-3	Bus support clamp, with 3 inch bc fitting for 3 inch IPS aluminum tube, slip or rigid fit ,Burndy Cat. No.UHG20A-3B or equal (Legend No.15.25) (Hardware for fixing to base of insulator shall comprise of 1/2 inch-13 UNC bolt and split lockwashers, the length of bolt shall be 30 mm)	20	LPLC-01-S08	PDG	10
B4-4	Expansion bus support clamp, bolt type with 3 inch bc fitting for 3 inch IPS Sch.80 aluminum tube, supplied with end cap ,Lorunser Cat. No.1KA510-090 or equal (Legend No.15.35)	5	LPLC-01-S08	PDG	10
B4-5	Terminal connector, weld type for 1272 MCM ACSR ,Burndy Cat. No.WA54R-4N or equal (Legend No.29.83)	40	LPLC-01-S08	PDG	10
B4-6	Bar tap, weld type for 3 inch IPS aluminum tube to four holes NEMA pad ,Burndy Cat. No.SWAB20A-4N or equal (Legend No.42.04)	40	LPLC-01-S08	PDG	10
B4-7	Coupler, weld type for 5 inch IPS Sch.80 aluminum tube ,Burndy Cat. No.WS94A-F or equal (Legend No.44.08)	90	LPLC-01-S08	PDG	10

DRAFT

INVITATION TO BID NO. IETS-LPLC-TIEC-NPUP-MC1-01

Delivery Schedule and Distribution List

Long-Term Investment Plan to Accommodate Large Power Consumer

Schedule B4 : 230 kV and below Bus Fitting

Item No.	Description	Qty	Job no.	Substation	Delivery Required by EGAT (within months after confirmation of Letter of Award of Contract)
					CFR Thai Port / Ex-works / DDP EGAT's Store
B4-8	Coupler, bolt type for 3 inch IPS aluminum tube ,Lorunser Cat. No.1AA100-090 or equal (Legend No.43.54)	15	LPLC-01-S08	PDG	10
B4-9	Corona bell, internal type for 3 inch IPS Sch.40 aluminum tube ,Burndy Cat. No.LB20A or equal (Legend No.45.56)	15	LPLC-01-S08	PDG	10
B4-10	Stainless steel hexagon head bolts, 0.5-13 inch, 2.5 inch long fully threaded and manufactures of series 18-8 material, coarse thread series class 2A tolerance ,Burndy Cat. No.50x250 HSSB or equal (Legend No.90.51)	200	LPLC-01-S08	PDG	10
B4-11	Stainless steel hexagon head bolts, 0.5-13 inch, 3.5 inch long fully threaded and manufactures of series 18-8 material, coarse thread series class 2A tolerance ,Burndy Cat. No.50x350 HSSB or equal (Legend No.90.52)	895	LPLC-01-S08	PDG	10
B4-12	Stainless steel hexagon nuts manufactures of series 18-8 material finish type, coarse thread series class 2B fit for 0.5-13 inch bolts size ,Burndy Cat. No.50 HSSN or equal (Legend No.90.61)	1090	LPLC-01-S08	PDG	10
B4-13	Stainless steel flat washers manufactures of 18-8 material and of medium design 1.125 inch O.D., 0.594 inch I.D., and 0.125 inch thickness ,Burndy Cat. No.50 FWSS or equal (Legend No.90.66)	1785	LPLC-01-S08	PDG	10
B4-14	Stainless steel belleville washers manufactures of alloy 301, 302 or 18-8 materials, 1.06 inch O.D., 0.530 inch I.D., 0.095 inch thickness ,Burndy Cat. No.50x106 BWSS or equal (Legend No.90.76)	1090	LPLC-01-S08	PDG	10

DRAFT

INVITATION TO BID NO. IETS-LPLC-TIEC-NPUP-MC1-01

Delivery Schedule and Distribution List

Long-Term Investment Plan to Accommodate Large Power Consumer

Schedule B4 : 230 kV and below Bus Fitting

Item No.	Description	Qty	Job no.	Substation	Delivery Required by EGAT (within months after confirmation of Letter of Award of Contract)
					CFR Thai Port / Ex-works / DDP EGAT's Store
B4-15	Aluminum joint compound in 8-oz bottles ,Burndy Cat. No.P8A or equal (Legend No.90.91)	110	LPLC-01-S08	PDG	10
B4-16	Corona ring ,Lorunser Cat. No.1TZ010-127 or equal (Legend No.90.15)	40	LPLC-01-S08	PDG	10

Thai Port = BKK Port

DRAFT

INVITATION TO BID NO. IETS-LPLC-TIEC-NPUP-MC1-01

Delivery Schedule and Distribution List

Long-Term Investment Plan to Accommodate Large Power Consumer

Schedule B5 : Grounding Material

Item No.	Description	Qty	Job no.	Substation	Delivery Required by EGAT (within months after confirmation of Letter of Award of Contract)
					CFR Thai Port / Ex-works / DDP EGAT's Store
B5-1	Exothermic welding mold for connecting horizontal cable of no. 4/0 AWG run to horizontal through cable of no. 4/0 AWG copper ground wire tap ,Kumwell Cat. No.CC2-C-4/04/0 or equal (Legend No.60.03)	22	LPLC-01-S08	PDG	10
B5-2	Exothermic welding mold for connecting angular cable drop of no. 4/0 AWG copper ground wire to vertical steel flat surface ,Kumwell Cat. No.CS3-Y-4/0 or equal (Legend No.60.04)	9	LPLC-01-S08	PDG	10
B5-3	Exothermic welding mold for connecting cable of no. 4/0 AWG copper ground wire vertical through to steel flat surface ,Kumwell Cat. No.CS4-Y-4/0 or equal (Legend No.60.07)	36	LPLC-01-S08	PDG	10
B5-4	Changeable handle clamp ,Kumwell Cat. No.HCC00-XY or equal (Legend No.60.09)	7	LPLC-01-S08	PDG	10
B5-5	Welding powder cartridges for mold ,Kumwell Cat. No.CC2-C-4/04/0 or equal (Legend No.60.11)	635	LPLC-01-S08	PDG	10
B5-6	Welding powder cartridges for mold ,Kumwell Cat. No.CS3-Y-4/0 or equal (Legend No.60.12)	262	LPLC-01-S08	PDG	10
B5-7	Welding powder cartridges for mold ,Kumwell Cat. No.CS4-Y-4/0 or equal (Legend No.60.15)	1065	LPLC-01-S08	PDG	10
B5-8	Tool kit complete set ,Kumwell Cat. No.KTA000 or equal (Legend No.60.17)	4	LPLC-01-S08	PDG	10
B5-9	Flint igniter ,Kumwell Cat. No.KTA014U or equal (Legend No.60.18)	79	LPLC-01-S08	PDG	10

DRAFT

INVITATION TO BID NO. IETS-LPLC-TIEC-NPUP-MC1-01

Delivery Schedule and Distribution List

Long-Term Investment Plan to Accommodate Large Power Consumer

Schedule B5 : Grounding Material

Item No.	Description	Qty	Job no.	Substation	Delivery Required by EGAT (within months after confirmation of Letter of Award of Contract)
					CFR Thai Port / Ex-works / DDP EGAT's Store
B5-10	Single terminal lug one hole for 4/0 AWG copper ground wire ,Kumwell Cat. No.KGXTEL-4/0 or equal (Legend No.60.19)	92	LPLC-01-S08	PDG	10
B5-11	Ground connector for 2x4/0 AWG copper ground wire to steel flat surface ,Kumwell Cat. No.GXCCP-G2P or equal (Legend No.60.20d)	3	LPLC-01-S08	PDG	10
B5-12	Cable clamp for 4/0 AWG copper ground wire run to cable trench wall (with expansion bolt) ,Kumwell Cat. No.KGRC-A or equal (Legend No.60.22)	539	LPLC-01-S08	PDG	10
B5-13	Ground safety mat no. 6 AWG solid copper wire size 1.2 x 1.2 m. Spacing 0.15 x 0.15 m. ,Kumwell Cat. No.CC14-C-#6#6 or equal (Legend No.60.23)	20	LPLC-01-S08	PDG	10
B5-14	Compression terminal for 185 sq.mm. copper ground wire, 2 hole NEMA pad ,Kumwell Cat. No.KTH 400-12DN or equal (Legend No.60.52)	4	LPLC-01-S08	PDG	10

Thai Port = BKK Port

DRAFT

INVITATION TO BID NO. IETS-LPLC-TIEC-NPUP-MC1-01

Delivery Schedule and Distribution List

Long-Term Investment Plan to Accommodate Large Power Consumer

Schedule B6 : Rigid Steel Conduit

Item No.	Description	Qty	Job no.	Substation	Delivery Required by EGAT (within months after confirmation of Letter of Award of Contract)
					CFR Thai Port / Ex-works / DDP EGAT's Store
B6-1	Rigid steel conduit 2.0 inch dia., 3.05 m long	120	LPLC-01-S08	PDG	10

DRAFT

INVITATION TO BID NO. IETS-LPLC-TIEC-NPUP-MC1-01

Delivery Schedule and Distribution List

Long-Term Investment Plan to Accommodate Large Power Consumer

Schedule B7 : Conduit Fitting

Item No.	Description	Qty	Job no.	Substation	Delivery Required by EGAT (within months after confirmation of Letter of Award of Contract)
					CFR Thai Port / Ex-works / DDP EGAT's Store
B7-1	Bushing for rigid steel conduit 2.0 inch dia.	265	LPLC-01-S08	PDG	10
B7-2	Lock nut for rigid steel conduit 2.0 inch dia.	265	LPLC-01-S08	PDG	10
B7-3	Coupling for rigid steel conduit 2.0 inch dia.	85	LPLC-01-S08	PDG	10
B7-4	Flexible rain tight conduit 2.0 inch dia., 15 meter/package	25	LPLC-01-S08	PDG	10
B7-5	Connector for flexible rain tight conduit 2.0 inch dia.	170	LPLC-01-S08	PDG	10
B7-6	Conduit pipe clamp for rigid steel conduit 2.0 inch dia.	190	LPLC-01-S08	PDG	10

Thai Port = BKK Port

DRAFT

INVITATION TO BID NO. IETS-LPLC-TIEC-NPUP-MC1-01

Delivery Schedule and Distribution List

Transmission System Improvement Project in Northeastern, Lower Northern, Central Regions and Bangkok Area to Enhance System Security

Schedule C1 : Switchyard Lighting Fixture

Item No.	Description	Qty	Job no.	Substation	Delivery Required by EGAT (within months after confirmation of Letter of Award of Contract)
					CFR Thai Port / Ex-works / DDP EGAT's Store
C1-1	Flood lighting fixture, LED lamp, 10000 lumen, wide-beam, complete with control gear as per Specification attached	6	TIEC-02-S03	CYP2	10
		3	TIEC-04-S05	SD	10
C1-2	Tapered galvanized steel lamp post H=5000 mm. complete with 2 A 250 V plug fuse, 20 A 500 V terminal block for accepting 4 sq.mm. of incoming and outgoing cables and anchor bolts as per Dwg. No. ST-LP-0-03 and SD-AB-0-01	6	TIEC-02-S03	CYP2	10

DRAFT

INVITATION TO BID NO. IETS-LPLC-TIEC-NPUP-MC1-01

Delivery Schedule and Distribution List

Transmission System Improvement Project in Northeastern, Lower Northern, Central Regions and Bangkok Area to Enhance System Security

Schedule C2 : Aluminum Tube

Item No.	Description	Qty	Job no.	Substation	Delivery Required by EGAT (within months after confirmation of Letter of Award of Contract)
					CFR Thai Port / Ex-works / DDP EGAT's Store
C2-1	Aluminum tube 3.0" IPS Sch.40, 6 meters long	20	TIEC-04-S05	SD	10
		15	TIEC-04-S06	TTK	10
C2-2	Aluminum tube 5.0" IPS Sch.40, 6 meters long	10	TIEC-04-S06	TTK	10

DRAFT

INVITATION TO BID NO. IETS-LPLC-TIEC-NPUP-MC1-01

Delivery Schedule and Distribution List

Transmission System Improvement Project in Northeastern, Lower Northern, Central Regions and Bangkok Area to Enhance System Security

Schedule C3 : Compression Connector and Miscellaneous Hardware

Item No.	Description	Qty	Job no.	Substation	Delivery Required by EGAT (within months after confirmation of Letter of Award of Contract)
					CFR Thai Port / Ex-works / DDP EGAT's Store
C3-1	Strain clamp for 3/8 inch diameter galvanized steel OHG wire ,PLP Cat. No.A3DD4749T or equal (Legend No.12.21)	15	TIEC-02-S03	CYP2	10
		5	TIEC-04-S05	SD	10
		10	TIEC-04-S06	TTK	10
C3-2	Compression terminal for 1272 MCM ACSR, straight type, four holes NEMA pad without mounting bolt ,PLP Cat. No.A4DD17829T or equal (Legend No.16.45)	20	TIEC-02-S03	CYP2	10
		25	TIEC-04-S05	SD	10
		30	TIEC-04-S06	TTK	10
C3-3	Compression tee for 1272 MCM ACSR, four holes NEMA pad ,PLP Cat. No.A4DD16883T or equal (Legend No.17.43)	15	TIEC-02-S03	CYP2	10
		10	TIEC-04-S05	SD	10
		10	TIEC-04-S06	TTK	10
C3-4	Compression dead end for 1272 MCM ACSR, with non-adjustable clevis bolts, nuts and cotter key, four holes NEMA tap pad ,PLP Cat. No.A4DD16227T or equal (Legend No.24.15)	15	TIEC-02-S03	CYP2	10
		15	TIEC-04-S05	SD	10
		30	TIEC-04-S06	TTK	10
C3-5	Cable clamp for 3/8 inch diameter galvanized steel OHG wire, run to flat surface ,PLP Cat. No.A4DD3792T or equal (Legend No.46.61)	15	TIEC-02-S03	CYP2	10
		25	TIEC-04-S05	SD	10

DRAFT

INVITATION TO BID NO. IETS-LPLC-TIEC-NPUP-MC1-01

Delivery Schedule and Distribution List

Transmission System Improvement Project in Northeastern, Lower Northern, Central Regions and Bangkok Area to Enhance System Security

Schedule C3 : Compression Connector and Miscellaneous Hardware

Item No.	Description	Qty	Job no.	Substation	Delivery Required by EGAT (within months after confirmation of Letter of Award of Contract)
					CFR Thai Port / Ex-works / DDP EGAT's Store
		10	TIEC-04-S06	TTK	10
C3-6	Ball clevis 16 mm. ,PLP Cat. No.A4DD08248T or equal (Legend No.80.01)	5	TIEC-04-S05	SD	10
C3-7	Ball eye 16 mm. ,PLP Cat. No.A4DD1114T or equal (Legend No.80.06)	20	TIEC-02-S03	CYP2	10
		15	TIEC-04-S05	SD	10
		20	TIEC-04-S06	TTK	10
C3-8	Socket clevis 16 mm. ,PLP Cat. No.A4DD10476T or equal (Legend No.80.11)	10	TIEC-04-S06	TTK	10
C3-9	Socket eye with 19 mm. boss ,PLP Cat. No.A4DD17834T or equal (Legend No.80.16)	15	TIEC-02-S03	CYP2	10
		10	TIEC-04-S05	SD	10
C3-10	Socket eye with 16 mm. boss ,PLP Cat. No.A4DD17835T or equal (Legend No.80.17)	10	TIEC-02-S03	CYP2	10
		5	TIEC-04-S05	SD	10
		5	TIEC-04-S06	TTK	10
C3-11	Twisted clevis tongue 20 mm. ,PLP Cat. No.A4DD17798T or equal (Legend No.80.23)	15	TIEC-02-S03	CYP2	10
		10	TIEC-04-S05	SD	10
		30	TIEC-04-S06	TTK	10
C3-12	Bow shackle 16 mm. ,PLP Cat. No.A4DD14164T or equal (Legend No.80.31)	25	TIEC-02-S03	CYP2	10
		15	TIEC-04-S05	SD	10
		20	TIEC-04-S06	TTK	10

DRAFT

INVITATION TO BID NO. IETS-LPLC-TIEC-NPUP-MC1-01

Delivery Schedule and Distribution List

Transmission System Improvement Project in Northeastern, Lower Northern, Central Regions and Bangkok Area to Enhance System Security

Schedule C3 : Compression Connector and Miscellaneous Hardware

Item No.	Description	Qty	Job no.	Substation	Delivery Required by EGAT (within months after confirmation of Letter of Award of Contract)
					CFR Thai Port / Ex-works / DDP EGAT's Store
C3-13	Turnbuckle clevis-clevis 3/4 x 12 inch size and take up ,PLP Cat. No.A4DD17520T or equal (Legend No.80.36)	10	TIEC-02-S03	CYP2	10
		5	TIEC-04-S05	SD	10
		10	TIEC-04-S06	TTK	10
C3-14	Turnbuckle clevis-eye 5/8 x 12 inch size and take up ,PLP Cat. No.A4DD17880T or equal (Legend No.80.38)	10	TIEC-02-S03	CYP2	10
		5	TIEC-04-S05	SD	10
		5	TIEC-04-S06	TTK	10
C3-15	Turnbuckle eye-eye 3/4 x 12 inch size and take up ,PLP Cat. No.A4DD17521T or equal (Legend No.80.39)	5	TIEC-04-S05	SD	10
C3-16	Strain yoke plate 200 mm. spacing 18 mm. hole ,PLP Cat. No.A4DD10569T or equal (Legend No.80.41)	10	TIEC-04-S06	TTK	10
C3-17	Strain yoke plate 200 mm. spacing 20.5 mm. hole ,PLP Cat. No.A4DD4372T or equal (Legend No.80.42)	5	TIEC-04-S06	TTK	10
C3-18	3.5 inch sub-base 5 inch bc on top and bottom ,PLP Cat. No.A4DD17490T or equal (Legend No.80.51)	10	TIEC-02-S03	CYP2	10
		15	TIEC-04-S05	SD	10
		15	TIEC-04-S06	TTK	10
C3-19	Galvanized steel bolt, M16, 50 mm. long ,EGAT Cat. No.SD-AB-0-01 or equal (Legend No.90.31)	55	TIEC-04-S05	SD	10
		55	TIEC-04-S06	TTK	10
C3-20	Galvanized steel bolt, M16, 55 mm. long ,EGAT Cat. No.SD-AB-0-01 or equal (Legend No.90.32)	30	TIEC-02-S03	CYP2	10
C3-21	Galvanized steel nut for M16 bolt ,EGAT Cat. No.SD-AB-0-01 or equal (Legend No.90.36)	30	TIEC-02-S03	CYP2	10

DRAFT

INVITATION TO BID NO. IETS-LPLC-TIEC-NPUP-MC1-01

Delivery Schedule and Distribution List

Transmission System Improvement Project in Northeastern, Lower Northern, Central Regions and Bangkok Area to Enhance System Security

Schedule C3 : Compression Connector and Miscellaneous Hardware

Item No.	Description	Qty	Job no.	Substation	Delivery Required by EGAT (within months after confirmation of Letter of Award of Contract)
					CFR Thai Port / Ex-works / DDP EGAT's Store
		55	TIEC-04-S05	SD	10
		55	TIEC-04-S06	TTK	10
C3-22	Galvanized steel spring washer for M16 bolt ,EGAT Cat. No.SD-AB-0-01 or equal (Legend No.90.46)	30	TIEC-02-S03	CYP2	10
		55	TIEC-04-S05	SD	10
		55	TIEC-04-S06	TTK	10

DRAFT

INVITATION TO BID NO. IETS-LPLC-TIEC-NPUP-MC1-01

Delivery Schedule and Distribution List

Transmission System Improvement Project in Northeastern, Lower Northern, Central Regions and Bangkok Area to Enhance System Security

Schedule C4 : 230 kV and below Bus Fitting

Item No.	Description	Qty	Job no.	Substation	Delivery Required by EGAT (within months after confirmation of Letter of Award of Contract)
					CFR Thai Port / Ex-works / DDP EGAT's Store
C4-1	Tubular bus suspension clamp, ball socket type (ANSI C29.2, type B) for 2 inch IPS aluminum tube ,Burndy Cat. No.CHS18A or equal (Legend No.12.53)	5	TIEC-04-S05	SD	10
C4-2	Tubular bus suspension clamp, ball socket type (ANSI C29.2, type B) for 3 inch IPS aluminum tube ,Burndy Cat. No.CHS20A or equal (Legend No.12.55)	5	TIEC-04-S06	TTK	10
C4-3	Bus support clamp, with 5 inch bc fitting for 1272 MCM ACSR ,Burndy Cat. No.UHKR16A-5B or equal (Legend No.13.45) (Hardware for fixing to base of insulator shall comprise of 5/8 inch-11 UNC bolt and split lockwashers for bolt size 5/8 inch, the length of bolt shall be 35 mm)	10	TIEC-02-S03	CYP2	10
C4-4	Bus support clamp, with 3 inch bc fitting for 1272 MCM ACSR ,Burndy Cat. No.UHKR16A-3B or equal (Legend No.13.55) (Hardware for fixing to base of insulator shall comprise of 1/2 inch-13 UNC bolt and split lockwashers, the length of bolt shall be 30 mm)	5	TIEC-04-S05	SD	10
C4-5	Bus support clamp, with 3 inch bc fitting for 2x1272 MCM ACSR ,Burndy Cat. No.U2HKR16A-3B or equal (Legend No.13.73) (Hardware for fixing to base of insulator shall comprise of 1/2 inch-13 UNC bolt and split lockwashers, the length of bolt shall be 30 mm)	5	TIEC-04-S06	TTK	10

DRAFT

INVITATION TO BID NO. IETS-LPLC-TIEC-NPUP-MC1-01

Delivery Schedule and Distribution List

Transmission System Improvement Project in Northeastern, Lower Northern, Central Regions and Bangkok Area to Enhance System Security

Schedule C4 : 230 kV and below Bus Fitting

Item No.	Description	Qty	Job no.	Substation	Delivery Required by EGAT (within months after confirmation of Letter of Award of Contract)
					CFR Thai Port / Ex-works / DDP EGAT's Store
C4-6	Bus support clamp, with 3 inch bc fitting for 2 inch IPS aluminum tube, slip or rigid fit ,Burndy Cat. No.UHG18A-3-B or equal (Legend No.15.23) (Hardware for fixing to base of insulator shall comprise of 1/2 inch-13 UNC bolt and split lockwashers, the length of bolt shall be 30 mm)	5	TIEC-04-S05	SD	10
C4-7	Bus support clamp, with 3 inch bc fitting for 3 inch IPS aluminum tube, slip or rigid fit ,Burndy Cat. No.UHG20A-3B or equal (Legend No.15.25) (Hardware for fixing to base of insulator shall comprise of 1/2 inch-13 UNC bolt and split lockwashers, the length of bolt shall be 30 mm)	5	TIEC-04-S06	TTK	10
C4-8	Bus support, with 5 inch bc fitting for 2 inch IPS aluminum tube, slip or rigid fit ,Burndy Cat. No.WOH18A-5B or equal (Legend No.15.43) (Hardware for fixing to base of insulator shall comprise of 5/8 inch-11 UNC bolt and split lockwashers for bolt size 5/8 inch, the length of bolt shall be 35 mm)	10	TIEC-04-S05	SD	10

DRAFT

INVITATION TO BID NO. IETS-LPLC-TIEC-NPUP-MC1-01

Delivery Schedule and Distribution List

Transmission System Improvement Project in Northeastern, Lower Northern, Central Regions and Bangkok Area to Enhance System Security

Schedule C4 : 230 kV and below Bus Fitting

Item No.	Description	Qty	Job no.	Substation	Delivery Required by EGAT (within months after confirmation of Letter of Award of Contract)
					CFR Thai Port / Ex-works / DDP EGAT's Store
C4-9	Bus support, with 5 inch bc fitting for 3 inch IPS aluminum tube, slip or rigid fit ,Burndy Cat. No.WOH20A-5B or equal (Legend No.15.45) (Hardware for fixing to base of insulator shall comprise of 5/8 inch-11 UNC bolt and split lockwashers for bolt size 5/8 inch, the length of bolt shall be 35 mm)	10	TIEC-04-S05	SD	10
		10	TIEC-04-S06	TTK	10
C4-10	Bus support, with 5 inch bc fitting for 5 inch IPS aluminum tube, slip or rigid fit ,Burndy Cat. No.WOH24A-5B or equal (Legend No.15.47) (Hardware for fixing to base of insulator shall comprise of 5/8 inch-11 UNC bolt and split lockwashers for bolt size 5/8 inch, the length of bolt shall be 35 mm)	10	TIEC-04-S06	TTK	10
C4-11	Terminal connector, weld type for 2x1272 MCM ACSR ,Burndy Cat. No.W2A54R-4N or equal (Legend No.28.63)	45	TIEC-04-S06	TTK	10
C4-12	Terminal connector, weld type for 1272 MCM ACSR ,Burndy Cat. No.WA54R-4N or equal (Legend No.29.83)	90	TIEC-02-S03	CYP2	10
		55	TIEC-04-S05	SD	10
		10	TIEC-04-S06	TTK	10

DRAFT

INVITATION TO BID NO. IETS-LPLC-TIEC-NPUP-MC1-01

Delivery Schedule and Distribution List

Transmission System Improvement Project in Northeastern, Lower Northern, Central Regions and Bangkok Area to Enhance System Security

Schedule C4 : 230 kV and below Bus Fitting

Item No.	Description	Qty	Job no.	Substation	Delivery Required by EGAT (within months after confirmation of Letter of Award of Contract)
					CFR Thai Port / Ex-works / DDP EGAT's Store
C4-13	Terminal connector 90 degree, weld type for 1272 MCM ACSR ,Burndy Cat. No.WA54R-4N-90 or equal (Legend No.29.93)	10	TIEC-02-S03	CYP2	10
C4-14	Terminal connector, weld type for 2 inch IPS Sch.40 aluminum tube, four holes ,Burndy Cat. No.SWAC18A-34N or equal (Legend No.30.03)	10	TIEC-04-S05	SD	10
C4-15	Terminal connector, weld type for 3 inch IPS Sch.40 aluminum tube, four holes ,Burndy Cat. No.SWAC20A-34N-SG or equal (Legend No.30.05)	10	TIEC-04-S06	TTK	10
C4-16	Expansion terminal connector, weld type for 2 inch IPS Sch.40 aluminum tube, four holes ,Burndy Cat. No.WXA18A-4N-SG1 or equal (Legend No.30.13)	5	TIEC-04-S05	SD	10
C4-17	Expansion terminal connector, weld type for 3 inch IPS Sch.40 aluminum tube, four holes ,Burndy Cat. No.WXA20A-4N-SG4 or equal (Legend No.30.15)	5	TIEC-04-S06	TTK	10
C4-18	Connector angle " T ", weld type for 2 inch IPS aluminum tube run to 80 degree 2 inch IPS aluminum tube tap ,Burndy Cat. No.SWT18A18A-80 or equal (Legend No.39.07)	40	TIEC-04-S05	SD	10

DRAFT

INVITATION TO BID NO. IETS-LPLC-TIEC-NPUP-MC1-01

Delivery Schedule and Distribution List

Transmission System Improvement Project in Northeastern, Lower Northern, Central Regions and Bangkok Area to Enhance System Security

Schedule C4 : 230 kV and below Bus Fitting

Item No.	Description	Qty	Job no.	Substation	Delivery Required by EGAT (within months after confirmation of Letter of Award of Contract)
					CFR Thai Port / Ex-works / DDP EGAT's Store
C4-19	Connector angle " T ", weld type for 5 inch IPS aluminum tube run to 80 degree 3 inch IPS aluminum tube tap ,Burndy Cat. No.SWT24A20A-80 or equal (Legend No.39.48)	15	TIEC-04-S06	TTK	10
C4-20	Connector " V ", weld type for 3 inch IPS aluminum tube run to 20 degree 2 inch IPS aluminum tube tap ,Burndy Cat. No.SWAT20A18A-20 or equal (Legend No.41.32)	20	TIEC-04-S05	SD	10
C4-21	Connector " V ", weld type for 5 inch IPS aluminum tube run to 20 degree 3 inch IPS aluminum tube tap ,Burndy Cat. No.SWAT24A20A-20 or equal (Legend No.41.53)	10	TIEC-04-S06	TTK	10
C4-22	Bar tap, weld type for 2 inch IPS aluminum tube to four holes NEMA pad ,Burndy Cat. No.SWAB19A-34N or equal (Legend No.42.02)	10	TIEC-04-S05	SD	10
C4-23	Bar tap, weld type for 3 inch IPS aluminum tube to four holes NEMA pad ,Burndy Cat. No.SWAB20A-4N or equal (Legend No.42.04)	10	TIEC-04-S06	TTK	10
C4-24	Coupler, weld type for 3 inch IPS Sch.40 aluminum tube ,Burndy Cat. No.WS20A-F or equal (Legend No.44.04)	20	TIEC-04-S05	SD	10
		5	TIEC-04-S06	TTK	10
C4-25	Coupler, weld type for 5 inch IPS Sch.40 aluminum tube ,Burndy Cat. No.WS24A-F or equal (Legend No.44.06)	15	TIEC-04-S06	TTK	10

DRAFT

INVITATION TO BID NO. IETS-LPLC-TIEC-NPUP-MC1-01

Delivery Schedule and Distribution List

Transmission System Improvement Project in Northeastern, Lower Northern, Central Regions and Bangkok Area to Enhance System Security

Schedule C4 : 230 kV and below Bus Fitting

Item No.	Description	Qty	Job no.	Substation	Delivery Required by EGAT (within months after confirmation of Letter of Award of Contract)
					CFR Thai Port / Ex-works / DDP EGAT's Store
C4-26	Corona bell, internal type for 2 inch IPS Sch.40 aluminum tube ,Burndy Cat. No.LB18A or equal (Legend No.45.54)	10	TIEC-04-S05	SD	10
C4-27	Corona bell, internal type for 3 inch IPS Sch.40 aluminum tube ,Burndy Cat. No.LB20A or equal (Legend No.45.56)	10	TIEC-04-S05	SD	10
		10	TIEC-04-S06	TTK	10
C4-28	Corona bell, internal type for 5 inch IPS Sch.40 aluminum tube ,Burndy Cat. No.LB24A or equal (Legend No.45.58)	10	TIEC-04-S06	TTK	10
C4-29	Spacer connector for 2x1272 MCM ACSR, distance between conductor center 100 mm. ,Burndy Cat. No.S2GBP46A-10 or equal (Legend No.47.05)	20	TIEC-04-S06	TTK	10
C4-30	Spacer connector for 2x1272 MCM ACSR, distance between conductor center 200 mm. ,Burndy Cat. No.S2GBP46A-20 or equal (Legend No.47.15)	20	TIEC-04-S06	TTK	10
C4-31	Stainless steel hexagon head bolts, 0.5-13 inch, 2.5 inch long fully threaded and manufactures of series 18-8 material, coarse thread series class 2A tolerance ,Burndy Cat. No.50x250 HSSB or equal (Legend No.90.51)	55	TIEC-02-S03	CYP2	10
		305	TIEC-04-S05	SD	10
		150	TIEC-04-S06	TTK	10

DRAFT

INVITATION TO BID NO. IETS-LPLC-TIEC-NPUP-MC1-01

Delivery Schedule and Distribution List

Transmission System Improvement Project in Northeastern, Lower Northern, Central Regions and Bangkok Area to Enhance System Security

Schedule C4 : 230 kV and below Bus Fitting

Item No.	Description	Qty	Job no.	Substation	Delivery Required by EGAT (within months after confirmation of Letter of Award of Contract)
					CFR Thai Port / Ex-works / DDP EGAT's Store
C4-32	Stainless steel hexagon head bolts, 0.5-13 inch, 3.0 inch long fully threaded and manufactures of series 18-8 material, coarse thread series class 2A tolerance ,Burndy Cat. No.50x300 HSSB or equal (Legend No.90.54)	450	TIEC-02-S03	CYP2	10
		55	TIEC-04-S05	SD	10
		345	TIEC-04-S06	TTK	10
C4-33	Stainless steel hexagon nuts manufactures of series 18-8 material finish type, coarse thread series class 2B fit for 0.5-13 inch bolts size ,Burndy Cat. No.50 HSSN or equal (Legend No.90.61)	505	TIEC-02-S03	CYP2	10
		360	TIEC-04-S05	SD	10
		490	TIEC-04-S06	TTK	10
C4-34	Stainless steel flat washers manufactures of 18-8 material and of medium design 1.125 inch O.D., 0.594 inch I.D., and 0.125 inch thickness ,Burndy Cat. No.50 FWSS or equal (Legend No.90.66)	1005	TIEC-02-S03	CYP2	10
		715	TIEC-04-S05	SD	10
		980	TIEC-04-S06	TTK	10

DRAFT

INVITATION TO BID NO. IETS-LPLC-TIEC-NPUP-MC1-01

Delivery Schedule and Distribution List

Transmission System Improvement Project in Northeastern, Lower Northern, Central Regions and Bangkok Area to Enhance System Security

Schedule C4 : 230 kV and below Bus Fitting

Item No.	Description	Qty	Job no.	Substation	Delivery Required by EGAT (within months after confirmation of Letter of Award of Contract)
					CFR Thai Port / Ex-works / DDP EGAT's Store
C4-35	Stainless steel belleville washers manufactures of alloy 301, 302 or 18-8 materials, 1.06 inch O.D., 0.530 inch I.D., 0.095 inch thickness ,Burndy Cat. No.50x106 BWSS or equal (Legend No.90.76)	505	TIEC-02-S03	CYP2	10
		360	TIEC-04-S05	SD	10
		490	TIEC-04-S06	TTK	10
C4-36	Aluminum joint compound in 8-oz bottles ,Burndy Cat. No.P8A or equal (Legend No.90.91)	50	TIEC-02-S03	CYP2	10
		15	TIEC-04-S05	SD	10
		45	TIEC-04-S06	TTK	10

Thai Port = BKK Port

DRAFT

INVITATION TO BID NO. IETS-LPLC-TIEC-NPUP-MC1-01

Delivery Schedule and Distribution List

Transmission System Improvement Project in Northeastern, Lower Northern, Central Regions and Bangkok Area to Enhance System Security

Schedule C5 : Grounding Material

Item No.	Description	Qty	Job no.	Substation	Delivery Required by EGAT (within months after confirmation of Letter of Award of Contract)
					CFR Thai Port / Ex-works / DDP EGAT's Store
C5-1	Exothermic welding mold for connecting horizontal cable of no. 4/0 AWG run to horizontal through cable of no. 4/0 AWG copper ground wire tap ,Kumwell Cat. No.CC2-C-4/04/0 or equal (Legend No.60.03)	7	TIEC-02-S03	CYP2	10
		4	TIEC-04-S05	SD	10
		4	TIEC-04-S06	TTK	10
C5-2	Exothermic welding mold for connecting angular cable drop of no. 4/0 AWG copper ground wire to vertical steel flat surface ,Kumwell Cat. No.CS3-Y-4/0 or equal (Legend No.60.04)	3	TIEC-02-S03	CYP2	10
		1	TIEC-04-S05	SD	10
		2	TIEC-04-S06	TTK	10
C5-3	Exothermic welding mold for connecting angular cable drop of no. 4/0 AWG copper ground wire to vertical steel pipe 2-4 inch diameter ,Kumwell Cat. No.CP1-X-4/0 or equal (Legend No.60.05)	1	TIEC-02-S03	CYP2	10
C5-4	Exothermic welding mold for connecting cable of no. 4/0 AWG copper ground wire vertical through to steel flat surface ,Kumwell Cat. No.CS4-Y-4/0 or equal (Legend No.60.07)	7	TIEC-02-S03	CYP2	10
		7	TIEC-04-S05	SD	10
		5	TIEC-04-S06	TTK	10
C5-5	Changeable handle clamp ,Kumwell Cat. No.HCC00-XY or equal (Legend No.60.09)	2	TIEC-02-S03	CYP2	10
		1	TIEC-04-S05	SD	10

DRAFT

INVITATION TO BID NO. IETS-LPLC-TIEC-NPUP-MC1-01

Delivery Schedule and Distribution List

Transmission System Improvement Project in Northeastern, Lower Northern, Central Regions and Bangkok Area to Enhance System Security

Schedule C5 : Grounding Material

Item No.	Description	Qty	Job no.	Substation	Delivery Required by EGAT (within months after confirmation of Letter of Award of Contract)
					CFR Thai Port / Ex-works / DDP EGAT's Store
		1	TIEC-04-S06	TTK	10
C5-6	Welding powder cartridges for mold ,Kumwell Cat. No.CC2-C-4/04/0 or equal (Legend No.60.11)	187	TIEC-02-S03	CYP2	10
		92	TIEC-04-S05	SD	10
		107	TIEC-04-S06	TTK	10
C5-7	Welding powder cartridges for mold ,Kumwell Cat. No.CS3-Y-4/0 or equal (Legend No.60.12)	84	TIEC-02-S03	CYP2	10
		13	TIEC-04-S05	SD	10
		50	TIEC-04-S06	TTK	10
C5-8	Welding powder cartridges for mold ,Kumwell Cat. No.CP1-X-4/0 or equal (Legend No.60.13)	18	TIEC-02-S03	CYP2	10
C5-9	Welding powder cartridges for mold ,Kumwell Cat. No.CS4-Y-4/0 or equal (Legend No.60.15)	181	TIEC-02-S03	CYP2	10
		185	TIEC-04-S05	SD	10
		132	TIEC-04-S06	TTK	10
C5-10	Tool kit complete set ,Kumwell Cat. No.KTA000 or equal (Legend No.60.17)	1	TIEC-02-S03	CYP2	10
		1	TIEC-04-S05	SD	10
		1	TIEC-04-S06	TTK	10
C5-11	Flint igniter ,Kumwell Cat. No.KTA014U or equal (Legend No.60.18)	19	TIEC-02-S03	CYP2	10
		12	TIEC-04-S05	SD	10
		12	TIEC-04-S06	TTK	10

DRAFT

INVITATION TO BID NO. IETS-LPLC-TIEC-NPUP-MC1-01

Delivery Schedule and Distribution List

Transmission System Improvement Project in Northeastern, Lower Northern, Central Regions and Bangkok Area to Enhance System Security

Schedule C5 : Grounding Material

Item No.	Description	Qty	Job no.	Substation	Delivery Required by EGAT (within months after confirmation of Letter of Award of Contract)
					CFR Thai Port / Ex-works / DDP EGAT's Store
C5-12	Single terminal lug one hole for 4/0 AWG copper ground wire ,Kumwell Cat. No.KGXTEL-4/0 or equal (Legend No.60.19)	3	TIEC-02-S03	CYP2	10
C5-13	Ground connector for 2x4/0 AWG copper ground wire to steel flat surface ,Kumwell Cat. No.GXCCP-G2P or equal (Legend No.60.20d)	9	TIEC-04-S05	SD	10
		9	TIEC-04-S06	TTK	10
C5-14	Flexible copper braid, 14 inch long, 600 A ,Kumwell Cat. No.KGZFCB 39533 or equal (Legend No.60.21)	5	TIEC-02-S03	CYP2	10
C5-15	Cable clamp for 4/0 AWG copper ground wire run to cable trench wall (with expansion bolt) ,Kumwell Cat. No.KGRC-A or equal (Legend No.60.22)	176	TIEC-02-S03	CYP2	10
		7	TIEC-04-S06	TTK	10

Thai Port = BKK Port

DRAFT

INVITATION TO BID NO. IETS-LPLC-TIEC-NPUP-MC1-01

Delivery Schedule and Distribution List

Transmission System Development in the area of Nan Phrae and Uttaradit provinces for Power Purchase from Lao PDR Projects

Schedule D1 : Compression Connector and Miscellaneous Hardware

Item No.	Description	Qty	Job no.	Substation	Delivery Required by EGAT (within months after confirmation of Letter of Award of Contract)
					CFR Thai Port / Ex-works / DDP EGAT's Store
D1-1	Aluminum alloy straight compression terminal for 1272 MCM ACSR, four holes NEMA pad ,Lorunser Cat. No.771.059.9 or equal (Legend No.16.45A). In addition, each compression terminal shall be furnished with the following accessories : - Stainless steel bolts, nuts, flat washers and belleville washers - Aluminum alloy streamlined cap for shielding hardware when bolting terminal to flat pad	55	NPUP-01-S01	NA	10
D1-2	500 kV Suspension insulator assembly (A903), excluding insulators, as per drawing no. SE-IS-9-01-02/03	15	NPUP-01-S01	NA	10
D1-3	Strain clamp for 3/8 inch diameter galvanized steel OHG wire ,PLP Cat. No.A3DD4749T or equal (Legend No.12.21)	10	NPUP-01-S01	NA	10
D1-4	Compression terminal for 1272 MCM ACSR, straight type, four holes NEMA pad without mounting bolt ,PLP Cat. No.A4DD17829T or equal (Legend No.16.45)	30	NPUP-01-S01	NA	10
D1-5	Compression tee for 1272 MCM ACSR, four holes NEMA pad ,PLP Cat. No.A4DD16883T or equal (Legend No.17.43)	15	NPUP-01-S01	NA	10

DRAFT

INVITATION TO BID NO. IETS-LPLC-TIEC-NPUP-MC1-01

Delivery Schedule and Distribution List

Transmission System Development in the area of Nan Phrae and Uttaradit provinces for Power Purchase from Lao PDR Projects

Schedule D1 : Compression Connector and Miscellaneous Hardware

Item No.	Description	Qty	Job no.	Substation	Delivery Required by EGAT (within months after confirmation of Letter of Award of Contract)
					CFR Thai Port / Ex-works / DDP EGAT's Store
D1-6	Cable clamp for 3/8 inch diameter galvanized steel OHG wire, run to flat surface ,PLP Cat. No.A4DD3792T or equal (Legend No.46.61)	10	NPUP-01-S01	NA	10
D1-7	Ball eye 16 mm. ,PLP Cat. No.A4DD1114T or equal (Legend No.80.06)	5	NPUP-01-S01	NA	10
D1-8	Socket eye with 16 mm. boss ,PLP Cat. No.A4DD17835T or equal (Legend No.80.17)	5	NPUP-01-S01	NA	10
D1-9	Bow shackle 16 mm. ,PLP Cat. No.A4DD14164T or equal (Legend No.80.31)	10	NPUP-01-S01	NA	10
D1-10	Turnbuckle clevis-eye 5/8 x 12 inch size and take up ,PLP Cat. No.A4DD17880T or equal (Legend No.80.38)	5	NPUP-01-S01	NA	10

DRAFT

INVITATION TO BID NO. IETS-LPLC-TIEC-NPUP-MC1-01

Delivery Schedule and Distribution List

Transmission System Development in the area of Nan Phrae and Uttaradit provinces for Power Purchase from Lao PDR Projects

Schedule D2 : 500 kV Bus Fitting

Item No.	Description	Qty	Job no.	Substation	Delivery Required by EGAT (within months after confirmation of Letter of Award of Contract)
					CFR Thai Port / Ex-works / DDP EGAT's Store
D2-1	Aluminum alloy quadruple bundle connector with six holes NEMA pad, complete with straight compression terminals for 4x1272 MCM ACSR, bolts, nuts and washers ,Lorunser Cat. No.3-19019/1E or equal (Legend No.28.93A). In addition, aluminum alloy streamlined cap for shielding hardware when bolting terminal to flat pad shall be provided.	55	NPUP-01-S01	NA	10
D2-2	Aluminum alloy quadruple bundle connector with six holes NEMA pad, complete with clamp for 4x1272 MCM ACSR (through conductor), bolts, nuts and washers ,Lorunser Cat. No.3-19019/2E or equal (Legend No.28.96A)	40	NPUP-01-S01	NA	10
D2-3	Aluminum alloy quadruple bundle connector for stud terminal, complete with terminal for 4x1272 MCM ACSR, bolts, nuts and washers ,Lorunser Cat. No.3-19019/3 or equal (Legend No.28.99A)	30	NPUP-01-S01	NA	10

DRAFT

INVITATION TO BID NO. IETS-LPLC-TIEC-NPUP-MC1-01

Delivery Schedule and Distribution List

Transmission System Development in the area of Nan Phrae and Uttaradit provinces for Power Purchase from Lao PDR Projects

Schedule D2 : 500 kV Bus Fitting

Item No.	Description	Qty	Job no.	Substation	Delivery Required by EGAT (within months after confirmation of Letter of Award of Contract)
					CFR Thai Port / Ex-works / DDP EGAT's Store
D2-4	Spacer connector for 2x1272 MCM ACSR, distance between conductor center 200 mm. ,Lorunser Cat. No.1QA102-040 or equal (Legend No.47.15A)	15	NPUP-01-S01	NA	10
D2-5	Spacer connector for 4x1272 MCM ACSR (Square), distance between conductor center 200 mm. ,RIBE Cat. No.Q4K-203 or equal (Legend No.47.22A)	110	NPUP-01-S01	NA	10
D2-6	Aluminum alloy portable earth connector for 4x 1272 MCM ACSR (EHV) ,Lorunser Cat. No.1HG407-041 or equal (Legend No.49.56A)	15	NPUP-01-S01	NA	10

Thai Port = BKK Port

DRAFT

INVITATION TO BID NO. IETS-LPLC-TIEC-NPUP-MC1-01

Delivery Schedule and Distribution List

Transmission System Development in the area of Nan Phrae and Uttaradit provinces for Power Purchase from Lao PDR Projects

Schedule D3 : 230 kV and below Bus Fitting

Item No.	Description	Qty	Job no.	Substation	Delivery Required by EGAT (within months after confirmation of Letter of Award of Contract)
					CFR Thai Port / Ex-works / DDP EGAT's Store
D3-1	Terminal connector for 4x1272 MCM ACSR, Six holes NEMA PAD ,Lorunser Cat. No.3-19019/1E or equal (Legend No.28.93). In addition, aluminum alloy streamlined cap for shielding hardware when bolting terminal to flat pad shall be provided.	30	NPUP-01-S01	NA	10
D3-2	Stainless steel hexagon head bolts, 0.5-13 inch, 3.5 inch long fully threaded and manufactures of series 18-8 material, coarse thread series class 2A tolerance ,Burndy Cat. No.50x350 HSSB or equal (Legend No.90.52)	795	NPUP-01-S01	NA	10
D3-3	Stainless steel hexagon nuts manufactures of series 18-8 material finish type, coarse thread series class 2B fit for 0.5-13 inch bolts size ,Burndy Cat. No.50 HSSN or equal (Legend No.90.61)	795	NPUP-01-S01	NA	10

DRAFT

INVITATION TO BID NO. IETS-LPLC-TIEC-NPUP-MC1-01

Delivery Schedule and Distribution List

Transmission System Development in the area of Nan Phrae and Uttaradit provinces for Power Purchase from Lao PDR Projects

Schedule D3 : 230 kV and below Bus Fitting

Item No.	Description	Qty	Job no.	Substation	Delivery Required by EGAT (within months after confirmation of Letter of Award of Contract)
					CFR Thai Port / Ex-works / DDP EGAT's Store
D3-4	Stainless steel flat washers manufactures of 18-8 material and of medium design 1.125 inch O.D., 0.594 inch I.D., and 0.125 inch thickness ,Burndy Cat. No.50 FWSS or equal (Legend No.90.66)	1585	NPUP-01-S01	NA	10
D3-5	Stainless steel belleville washers manufactures of alloy 301, 302 or 18-8 materials, 1.06 inch O.D., 0.530 inch I.D., 0.095 inch thickness ,Burndy Cat. No.50x106 BWSS or equal (Legend No.90.76)	795	NPUP-01-S01	NA	10
D3-6	Aluminum joint compound in 8-oz bottles ,Burndy Cat. No.P8A or equal (Legend No.90.91)	80	NPUP-01-S01	NA	10

Thai Port = BKK Port

DRAFT

INVITATION TO BID NO. IETS-LPLC-TIEC-NPUP-MC1-01

Delivery Schedule and Distribution List

Transmission System Development in the area of Nan Phrae and Uttaradit provinces for Power Purchase from Lao PDR Projects

Schedule D4 : Grounding Material

Item No.	Description	Qty	Job no.	Substation	Delivery Required by EGAT (within months after confirmation of Letter of Award of Contract)
					CFR Thai Port / Ex-works / DDP EGAT's Store
D4-1	Ground rod size 5/8 inch diameter x 10 feet	22	NPUP-01-S01	NA	10
D4-2	Exothermic welding mold for connecting copper weld ground rod size 5/8 inch diameter to copper ground wire no. 4/0 AWG ,Kumwell Cat. No.CR2-C-5/84/0 or equal (Legend No.60.02)	1	NPUP-01-S01	NA	10
D4-3	Exothermic welding mold for connecting horizontal cable of no. 4/0 AWG run to horizontal through cable of no. 4/0 AWG copper ground wire tap ,Kumwell Cat. No.CC2-C-4/04/0 or equal (Legend No.60.03)	14	NPUP-01-S01	NA	10
D4-4	Exothermic welding mold for connecting angular cable drop of no. 4/0 AWG copper ground wire to vertical steel flat surface ,Kumwell Cat. No.CS3-Y-4/0 or equal (Legend No.60.04)	2	NPUP-01-S01	NA	10
D4-5	Exothermic welding mold for connecting angular cable drop of no. 4/0 AWG copper ground wire to vertical steel pipe 2-4 inch diameter ,Kumwell Cat. No.CP1-X-4/0 or equal (Legend No.60.05)	2	NPUP-01-S01	NA	10
D4-6	Exothermic welding mold for connecting horizontal to horizontal cable cross of no. 4/0 AWG copper ground wire tap cable, cut cable in same plane ,Kumwell Cat. No.CC4-C-4/04/0 or equal (Legend No.60.06)	1	NPUP-01-S01	NA	10

DRAFT

INVITATION TO BID NO. IETS-LPLC-TIEC-NPUP-MC1-01

Delivery Schedule and Distribution List

Transmission System Development in the area of Nan Phrae and Uttaradit provinces for Power Purchase from Lao PDR Projects

Schedule D4 : Grounding Material

Item No.	Description	Qty	Job no.	Substation	Delivery Required by EGAT (within months after confirmation of Letter of Award of Contract)
					CFR Thai Port / Ex-works / DDP EGAT's Store
D4-7	Exothermic welding mold for connecting cable of no. 4/0 AWG copper ground wire vertical through to steel flat surface ,Kumwell Cat. No.CS4-Y-4/0 or equal (Legend No.60.07)	29	NPUP-01-S01	NA	10
D4-8	Changeable handle clamp ,Kumwell Cat. No.HCC00-XY or equal (Legend No.60.09)	5	NPUP-01-S01	NA	10
D4-9	Welding powder cartridges for mold ,Kumwell Cat. No.CR2-C-5/84/0 or equal (Legend No.60.10)	22	NPUP-01-S01	NA	10
D4-10	Welding powder cartridges for mold ,Kumwell Cat. No.CC2-C-4/04/0 or equal (Legend No.60.11)	402	NPUP-01-S01	NA	10
D4-11	Welding powder cartridges for mold ,Kumwell Cat. No.CS3-Y-4/0 or equal (Legend No.60.12)	43	NPUP-01-S01	NA	10
D4-12	Welding powder cartridges for mold ,Kumwell Cat. No.CP1-X-4/0 or equal (Legend No.60.13)	36	NPUP-01-S01	NA	10
D4-13	Welding powder cartridges for mold ,Kumwell Cat. No.CC4-C-4/04/0 or equal (Legend No.60.14)	17	NPUP-01-S01	NA	10
D4-14	Welding powder cartridges for mold ,Kumwell Cat. No.CS4-Y-4/0 or equal (Legend No.60.15)	845	NPUP-01-S01	NA	10
D4-15	Tool kit complete set ,Kumwell Cat. No.KTA000 or equal (Legend No.60.17)	3	NPUP-01-S01	NA	10
D4-16	Flint igniter ,Kumwell Cat. No.KTA014U or equal (Legend No.60.18)	52	NPUP-01-S01	NA	10

DRAFT

INVITATION TO BID NO. IETS-LPLC-TIEC-NPUP-MC1-01

Delivery Schedule and Distribution List

Transmission System Development in the area of Nan Phrae and Uttaradit provinces for Power Purchase from Lao PDR Projects

Schedule D4 : Grounding Material

Item No.	Description	Qty	Job no.	Substation	Delivery Required by EGAT (within months after confirmation of Letter of Award of Contract)
					CFR Thai Port / Ex-works / DDP EGAT's Store
D4-17	Single terminal lug one hole for 4/0 AWG copper ground wire ,Kumwell Cat. No.KGXTEL-4/0 or equal (Legend No.60.19)	43	NPUP-01-S01	NA	10
D4-18	Cable clamp for 4/0 AWG copper ground wire run to cable trench wall (with expansion bolt) ,Kumwell Cat. No.KGRC-A or equal (Legend No.60.22)	1078	NPUP-01-S01	NA	10
D4-19	Ground safety mat no. 6 AWG solid copper wire size 1.2 x 1.2 m. Spacing 0.15 x 0.15 m. ,Kumwell Cat. No.CC14-C-#6#6 or equal (Legend No.60.23)	14	NPUP-01-S01	NA	10

Thai Port = BKK Port

DRAFT

INVITATION TO BID NO. IETS-LPLC-TIEC-NPUP-MC1-01

Delivery Schedule and Distribution List

Transmission System Development in the area of Nan Phrae and Uttaradit provinces for Power Purchase from Lao PDR Projects

Schedule D5 : Rigid Steel Conduit

Item No.	Description	Qty	Job no.	Substation	Delivery Required by EGAT (within months after confirmation of Letter of Award of Contract)
					CFR Thai Port / Ex-works / DDP EGAT's Store
D5-1	Rigid steel conduit 2.0 inch dia., 3.05 m long	85	NPUP-01-S01	NA	10

DRAFT

INVITATION TO BID NO. IETS-LPLC-TIEC-NPUP-MC1-01

Delivery Schedule and Distribution List

Transmission System Development in the area of Nan Phrae and Uttaradit provinces for Power Purchase from Lao PDR Projects

Schedule D6 : Conduit Fitting

Item No.	Description	Qty	Job no.	Substation	Delivery Required by EGAT (within months after confirmation of Letter of Award of Contract)
					CFR Thai Port / Ex-works / DDP EGAT's Store
D6-1	Bushing for rigid steel conduit 2.0 inch dia.	165	NPUP-01-S01	NA	10
D6-2	Lock nut for rigid steel conduit 2.0 inch dia.	175	NPUP-01-S01	NA	10
D6-3	Coupling for rigid steel conduit 2.0 inch dia.	80	NPUP-01-S01	NA	10
D6-4	Flexible rain tight conduit 2.0 inch dia., 15 meter/package	20	NPUP-01-S01	NA	10
D6-5	Connector for flexible rain tight conduit 2.0 inch dia.	160	NPUP-01-S01	NA	10

Thai Port = BKK Port

DRAFT

SECTION D

CONTRACT

DRAFT

CONTRACT

SUPPLY OF MISCELLANEOUS EQUIPMENT

WORK PLAN TO IMPROVE THE ELECTRICITY SUPPLY MODEL FOR HIGH VOLTAGE SUBSTATION TO ENHANCE THE TRANSMISSION SYSTEM STABILITY AND RELIABILITY LONG-TERM INVESTMENT PLAN TO ACCOMMODATE LARGE POWER CONSUMER TRANSMISSION SYSTEM IMPROVEMENT PROJECT IN NORTHEASTERN, LOWER NORTHERN, CENTRAL REGIONS AND BANGKOK AREA TO ENHANCE SYSTEM SECURITY TRANSMISSION SYSTEM DEVELOPMENT IN THE AREA OF NAN PHRAE AND UTTARADIT PROVINCES FOR POWER PURCHASE FROM LAO PDR PROJECTS

No._____

This Contract is executed and delivered this_____day of _____, B.E._____(A.D._____), between

ELECTRICITY GENERATING AUTHORITY OF THAILAND

represented by_____ of said Authority , hereinafter called "EGAT", and

(Contractor)

represented by_____, age_____years, nationality _____, hereinafter called the "Contractor".

EGAT and the Contractor mutually agree as follows :

D-1. Contract Documents

The following documents attached to this Contract are incorporated and made a part of this Contract, as though fully written out and set forth herein :

Data Sheet
A. Invitation to Bid
B. Instructions to Bidders
C. Contract Price, Delivery Time of Equipment and Proposal Data
D. Contract
E. General Conditions
F. Special Conditions
G. Ratings and Features (None)
H. Bill of Materials (None)
I. Specifications
J. Drawings
K. Supplemental Notices

_____

_____

_____

DRAFT

L. Attachments :

_____

_____

_____

M. Changes :

_____

_____

_____

All of the foregoing documents are referred to herein as the Contract Documents. They are also incorporated into this Contract and made a part hereof all codes, designations, standards, standard specifications and similar Equipment which are referred to in the Specifications and Special Conditions.

D-2. <u>Acceptance of Proposal</u>

EGAT has accepted the proposal of the Contractor for furnishing the Equipment in conformity and in accordance with and subject to all the terms and conditions of these Contract Documents.

D-3. <u>Agreement</u>

The Contractor agrees to sell and EGAT agrees to buy the Equipment as described in these Contract Documents.

D-4. <u>Obligation of Contractor</u>

The Contractor agrees to perform well and faithfully all of the services and to furnish all of the Equipment described in these Contract Documents, and to supply and provide all Equipment, labor and other things requisite for or incidental to the said Work.

D-5. <u>Obligation of EGAT</u>

EGAT agrees, subject to the terms and conditions of these Contract Documents, to pay to the Contractor the amount shown, and at the rates and times and in the manner set forth in these Contract Documents.

DRAFT

D-6. Mutual Obligations

EGAT and the Contractor mutually agree to perform, fulfill, abide by, and submit to any and all of the provisions and requirements and all matters and things contained or expressed in, or reasonably to be inferred from these Contract Documents.

D-7. Deposit of Performance Security

The Contractor agrees to deposit with EGAT an acceptable performance security in accordance with the Contract Documents.

D-8. Assignment

The Contract or any part thereof shall not be assigned or pledged without the written consent of EGAT, nor shall the Contractor assign or pledge any money due, or to become due, to him hereunder, without the prior written consent of EGAT.

D-9. Notices

All notices called for by the terms of this Contract shall be effective only at the time of receipt thereof and only when received by the parties to whom they are addressed at the following addresses :

EGAT : Governor
Electricity Generating Authority of Thailand
Bangkruai, Nonthaburi 11130
Thailand

Contractor : _____

_____

_____

_____

All notices called for by the terms of this Contract shall be in the form of registered letters or ***letters submitted electronically or electronic mails (E-mails)*** in the English language.

DRAFT

D-10. Integration

EGAT and the Contractor agree that this Contract, including the Contract Documents, expresses all of the agreements, understandings, promises, and covenants of the parties, and that it integrates, combines, and supersedes all prior and contemporaneous negotiations, understandings, and agreements, whether written or oral, and that no modification or alteration of this Contract shall be valid or binding on either party, unless expressed in writing and executed with the same formality as this Contract, except as may otherwise be specifically provided in this Contract.

D-11. Counterpart

This Contract is executed in two (2) identical counterparts: one (1) for EGAT and one (1) for the Contractor.

ELECTRICITY GENERATING AUTHORITY OF THAILAND	CONTRACTOR :
BY_____	BY _____
( )	( )
WITNESS :	WITNESS :
BY_____	BY _____
( )	( )

DRAFT

SECTION E

GENERAL CONDITIONS

DRAFT

GENERAL CONDITIONS

E-1. Definitions

Whenever the following terms are used in the Contract Documents, they will have the following meanings :

EGAT	:	The Electricity Generating Authority of Thailand, having its Head Office at Nonthaburi, Thailand, and its authorized representative or representatives
Engineer	:	Firm or company assigned by EGAT to provide engineering, consulting or construction management services in support of EGAT
Bidder	:	Any person or firm or company or joint venture or consortium of firms submitting bid to EGAT for furnishing the services and Equipment described in the Contract Documents, in response to this Invitation to Bid
Contractor	:	Any person or firm or company or joint venture or consortium of firms including appointed representatives, successors and assignees thereof, whose bid has been accepted by EGAT for furnishing of the services and Equipment described in the Contract Documents
Subcontractor	:	Any person or firm or company (other than the Contractor) to whom any part of the Contract has been sublet, with the consent of EGAT, by the Contractor
Contract	:	The agreement between EGAT and the Contractor, and all Appendices and Schedules thereto including Invitation to Bid, Instructions to Bidders, Proposal, General Conditions, Special Conditions, Specifications, Ratings and Features, Drawings, Supplemental Notices and any other documents referred to in, or connected with the Contract, eventhough the said documents are issued after execution of the Contract
Contract Price	:	The sum specified in Section C which is inclusive of VAT (if any) subject to such additions thereto or deductions therefrom as may be made under the provisions hereinafter contained

DRAFT

Equipment	:	Machinery, apparatus, materials, goods, including accessories and spare parts to be supplied under the Contract and specifically described in the Specifications
Work	:	All the work to be done by the Contractor for design manufacture, shop test, transportation, and delivery of the Equipment ex-works, FOB Port of Shipment/Vessel or CFR Thai Port or at EGAT's store/site as agreed, including, if required, supervision for installation at site and supervision for field tests of the Equipment under the Contract
Thai Port	:	Commercial ports in Thailand including but not limited to Bangkok Port, Laem Chabang Port, Sriracha Harbour Port, Siam Seaport, Maptaphut Port, Songkhla Port, Phuket Harbour Port or Suvarnabhumi Airport, as the case may be
Bangkok Port	:	Bangkok Wharf (Klong Toey Port) and all other commercial ports in Bangkok Metropolitan area
Supervisor (if required)	:	Contractor's employee assigned as installation supervisor including assistant supervisor, to supervise and be responsible for the installation, erection, adjustment, field tests, and commissioning of the Equipment supplied under the Contract
Option (if any)	:	Equipment to be quoted by the Bidder which EGAT reserves the right to accept or omit in whole or in part
Year	:	Calendar year
Month	:	Calendar month
Day	:	Calendar day

E-2. Intent of Contract Documents

All of the Contract Documents are complementary, and what is called for by one shall be as binding as if called for by all. In the case of any discrepancy between any of the Contract Documents, or any defective description or ambiguity, the matter shall be promptly submitted to EGAT, which shall promptly make a determination in writing. Any adjustment by the Contractor without this determination shall be at the Contractor's own risk and expense. In all cases of discrepancy, defective description, or ambiguities, the interpretation given by EGAT shall be binding on the Contractor, subject to the provisions of Article E-31. Dispute Resolution, included in these General Conditions.

DRAFT

E-3. Applicable Law and Legal Jurisdiction

The applicable law of this Contract shall be the law in force in the Kingdom of Thailand. Should there be any ambiguity or discrepancy rising out or in connection with the Contract Documents, the interpretation thereof shall be made in accordance with Thai laws. Any litigations between the parties that may arise out of or in connection with this Contract or the breach or termination thereof or the performance of work thereunder shall be submitted to the Court of Thailand for decision, except as may be otherwise specifically provided in these Contract documents.

E-4. Statutory Requirements

Throughout the continuance of the Contract, the Contractor shall conform to all laws of the Kingdom of Thailand, and to all regulations, by-laws, ordinances, or orders made thereunder, and to the lawful requirements of any public, municipal, or other authority, in any way affecting or applicable to the Contractor or its operations.

E-5. Patents and Copyrights

The Contractor shall indemnify and hold EGAT, its officers, agents, and employees harmless against and from liability of any nature or kind, including costs and expenses for or on account of any copyrighted or uncopyrighted composition, secret process, patented or unpatented invention, article, or appliance manufactured, delivered, or used in carrying out the Work under the Contract. All drawings and the information contained therein as well as the use of any process, material or Equipment developed in the course of carrying out the Work under the Contract shall become the property of EGAT where EGAT shall have the right to use any or all of them for any purpose either for present or future projects. For the avoidance of doubt, none of them will be used solely for any commercial benefit which is not related to EGAT work.

DRAFT

E-6. Subcontracts

The Contractor shall not assign or transfer the Contract or any part thereof or any benefit or interest therein or thereunder, any monies due or become due under this Contract to any other person or persons.

The Contractor shall not be allowed to subcontract the whole of the Work under this Contract. Subcontracting of any part of the Work shall be subject to the prior written consent of EGAT. Such consent, if given**,** shall not relieve the Contractor from full and entire responsibility under this Contract.

If the Contractor desires to subcontract any part or parts of the Work called for by the Contract, he shall notify EGAT in writing to that effect and shall state in such notice the nature and extent of the part or parts of the Work called for by the Contract proposed to be subcontracted and name of the person proposed as Subcontractor. Unless and until written approval is given by EGAT, approval for which shall not be unreasonably withheld, the Contractor shall not subcontract any part of the Work. All requirements specified in these Contract Documents shall be applicable to Subcontractors also.

No contractual relation shall exist between EGAT and the Subcontractors, and the Subcontractors are not to enjoy any privileges conferred on the Contractor by this Contract.

Any Work done by any Subcontractor who has not been approved by EGAT shall be subject to rejection or stoppage of Work by EGAT. In such case the Contractor cannot claim delay or request for time extension of the Contract completion date and/or make financial claim to EGAT.

E-7. Export Charges

All tariffs, duties and other taxes or charges levied by the country of origin of the Equipment shall be paid by the Contractor, and such expenses shall be included in the cost of the Equipment.

E-8. Import Duty and Taxes

EGAT will pay all costs of procuring the necessary permits and licenses for importation into Thailand, and will pay import duty and any taxes including value added tax imposed at the port of entry on the Equipment to be supplied by the Contractor and imported into Thailand for the Work under this Contract.

DRAFT

EGAT will not pay import duty and taxes on either the personal effects of the Contractor's employees, such as personal articles, household furnishings and appliances, and goods of any kind imported for the personal use of the Contractor's employees whether imported by an employee or by the Contractor, or in respect of food, tobacco, liquor and other commissary goods imported by the Contractor or by his employees.

EGAT will not pay import duty and taxes including value added tax on equipment, tools, instruments and machinery imported by the Contractor for purpose of carrying out the work under the Contract. All processes of importation shall be arranged by the Contractor.

Equipment, tools, instruments and machinery which are certified by the Contractor that they are required for installation, test and commissioning of the Work at the site and they are intended for re-exportation can be temporarily exempted from import duty and taxes including value added tax. All Equipment thereof shall be imported under the name of the Contractor and be in accordance with the rules and regulations of the Customs Department of the Kingdom of Thailand.

EGAT will assist the Contractor for such temporary exemption of import duty and taxes including value added tax by issuing a letter confirming such temporary import. Import duty and taxes including value added tax for the temporarily imported Equipment shall be paid by the Contractor to the Customs Department before re-exportation at the rate to be specified by the Customs Department at the time of importation for the whole period they have been imported into the Kingdom of Thailand. Temporary importation of the Equipment is subject to approval of the Customs Department and the deposit of a bond with the Customs Department in the amount to be notified by the Customs Department is required. All costs for submission of information and data if required by the Customs Department and the cost of provision of the bond shall be borne by the Contractor.

In view of numerous advantages, the ATA Carnet system or other systems may be arranged for shipment of the said temporarily imported equipment by the Contractor (if required). Any charge incurred and/or any liability shall be borne by the Contractor.

E-9. Value Added Tax

Pursuant to the Revenue Code of Thailand, EGAT shall be responsible and pay when due for the value added tax imposed on the supply of Equipment, including local transportation (if any) and/or on the provision of services under this Contract. EGAT shall in no case be responsible for the value added tax collectible on any payment made by the Contractor under any subcontract or under any other circumstances and the Contractor shall comply with the rules and regulations of the Revenue Code of Thailand.

DRAFT

In case there is any change on the rate of value added tax imposed by the Government of Thailand, the amount of value added tax comprised in the Contract Price shall be adjusted to reflect such change, provided that the price of the Work shall remain unchanged.

E-10. <u>Income and Other Taxes</u>

Income and other taxes assessed or collected by the Government of Thailand, or any subdivision thereof, or any municipality therein on the Contractor and his employees shall be under the responsibility and account of the Contractor.

In accordance with the Revenue Code of Thailand, should the payment under this Contract be subject to income tax and withholding tax of any kind is required to be withheld by EGAT, such withholding tax shall be deducted by EGAT from each payment and EGAT will be responsible to remit such withholding tax to the Revenue Department of Thailand on behalf of the Contractor. In case any payment being made through the letter of credit or being made directly from foreign source whereby the withholding tax cannot be deducted from payment, the Contractor is required to immediately inform EGAT once each such payment is made to the Contractor, and the withholding tax of which will be paid from EGAT's own fund to the Revenue Department in the same manner as aforesaid. Such withholding tax amount as advanced by EGAT on behalf of the Contractor shall be reimbursed by the Contractor to EGAT within the period of time fixed by EGAT.

In the case where the Contractor considers that the transaction under this Contract is exempted from income tax of Thailand (under any circumstance), the Contractor shall submit, together with his proposal(s), a statement detailing such exemption and the valid documentary evidence. Should EGAT rely on the statement so submitted, no deduction for withholding tax shall be made from payment. However, if the tax authority of Thailand determines that such exemption is not applicable, the Contractor shall then be responsible for the amount(s) equal to the withholding tax, plus the amount(s) of tax exceeding those of withholding tax, including the surcharge and/or penalties imposed on EGAT and the Contractor. The responsibility and liability of the Contractor as provided in the preceding sentence shall survive termination of the Contract.

If the Contractor fails to immediately inform EGAT of the payment as required under the second paragraph preventing EGAT from remitting the withholding tax to the Revenue Department within seven (7) Days from the end of the month in which such payment is made, or fails to pay and/or reimburse EGAT for any amount required under this Article within the period of time fixed by EGAT, such period not to be shorter than fifteen (15) Days from the date of EGAT's notice for payment, EGAT has the right to claim directly from the Contractor or claim from Performance Security or Maintenance Security, as the case may be, or deduct or setoff from any money due to the Contractor under this Contract

DRAFT

for the outstanding amount, surcharge and/or penalty (if any) together with interest at the rate of Minimum Overdraft Rate (MOR) plus two (2) per cent calculated from the due date up to the date the payment is made in full.

EGAT will proceed with the tax matters under the Contract by relying on the information and document submitted by the Contractor in relation to the Bidder's status and tax liability. If the Revenue Department of Thailand differently determines the status and tax liability, the Contractor shall be responsible and liable for any cost and expense, penalty and/or surcharge incurred and/or imposed on him and EGAT in relation thereto.

E-11. <u>Fees and Duties</u>

Any and all immigration fees, stamp duties, and other fees assessed or collected by the Government of Thailand, or by any subdivision thereof, or by any municipality therein, on this Contract, on the Contractor and/or his personnel shall be paid by the Contractor. Any taxes collectible under this Contract, other than those stipulated in this Contract, shall be at the responsibility and account of the Contractor.

The stamp duty for any service contract (Construction, Hire of Work, Consultancy Service, Transportation, Supervisor, etc.) with the Contract value of the service portion lower than baht 200,000.- is required to be affixed by the Contractor on the original copy and the counterpart of the Contract. In case the value of the service portion is baht 200,000.- and over, payment of such stamp duty by the Contractor shall be made in cash to the Revenue Department of Thailand or its authorized subdistrict offices. In either case, the stamp duty is required to be affixed or paid, as the case may be, within fifteen (15) Days after the date of Contract execution, otherwise the Contractor shall be liable to pay for any and all penalties imposed for the delay as required by law.

The Contract value of the service portion to be calculated for stamp duty under this provision shall be the price excluding value added tax.

For a foreign Contractor who has no representative in Thailand, EGAT will, upon receipt of written request from the Contractor, affix or pay for stamp duties from EGAT's own fund on behalf of the Contractor, the Contractor is therefore required to reimburse EGAT for such stamp duties plus any and all penalties imposed by law for delay, if such delay is due to Contractor's failure to make written request to EGAT as aforesaid within a reasonable period of time.

If the Contractor fails to reimburse EGAT for any and all amount as required under this Article within the period of time fixed by EGAT, such period not to be shorter than fifteen (15) Days from the date of EGAT's notice for payment, EGAT has the right to claim directly from the Contractor or claim from Performance Security or Maintenance Security,

DRAFT

as the case may be, or deduct or setoff from any and all money due to the Contractor under this Contract for the outstanding amount together with interest at the rate of Minimum Overdraft Rate (MOR) plus two (2) per cent calculated from the due date up to the date the payment is made in full.

E-12. Performance Security

The Contractor shall, at the time of execution of the Contract, deposit with EGAT a performance security for the due and proper performance of this Contract in the amount of ten (10) per cent, round up to the nearest whole number, of the total Contract Price. The performance security shall insure payment of any obligations, penalty, damages, liquidated damages, or expenses for which the Contractor may become liable to EGAT.

The amount of the performance security shall be adjusted or the Contractor may deposit a new performance security in the amount of ten (10) per cent, round up to the nearest whole number, of the additional Contract Price to cover the Contractor's obligation in case the Contract Price is increased due to change of the Work under the Article E-21. Changes and Extra or Omitted Work.

The performance security shall be in the form of a cash deposit, or a cashier cheque issued by a local bank, or a bank guarantee or letter of guarantee issued only by a local bank or an acceptable financial institution in Thailand, or by a foreign bank counter-guaranteed by a local bank and, made payable to EGAT in the same currency as that of the Contract. In case of a cash deposit or a cashier cheque, only Thai baht portion of the Contract Price can be made. EGAT may at any time, upon application by the Contractor, approve the substitution for any performance security held under this Article by other performance security on such terms and conditions as may be approved by EGAT. The Contractor shall bear the cost of the performance security.

The conditions of the guarantor's obligations in the performance security shall include, inter alia, the following :

(1) The guarantor shall unconditionally guarantee, as primary obligor and not as surety merely, payment of any obligations, penalties, damages, liquidated damages, or expenses for which the Contractor may become liable to EGAT.

(2) No extension of time, change in, addition to, or other modification of the terms of the Contract or Work to be performed thereunder, or of the specifications or other Contract Documents shall in anyway release the guarantor from any liability under the performance security, and the guarantor shall thereby waive notice of any such extension of time, change, addition or modification.

DRAFT

(3) The performance security shall be valid and remain in full effect from the date of execution of the Contract until the issuance of the Acceptance Certificate by EGAT or the acceptance of Equipment deemed to be made by EGAT against submission of the Maintenance Security accepted by EGAT.

Unless and until an official receipt is issued in respect to a security deposit, EGAT will not recognize or accept any such deposit as fulfilling the requirements of this Article. Failure to deposit a performance security at the time specified above in this Article or such extended time as may be approved by EGAT shall be a breach of this Contract and EGAT is entitled to terminate the Contract or suspend any payment for Work performed until the performance security has been accepted by EGAT. EGAT shall not be liable for any losses, expenses and/or damages resulting from such payment suspension.

If any performance security furnished under this Article becomes unacceptable to EGAT, or if any guarantor fails to furnish reports as to guarantor's financial condition from time to time, as requested by EGAT, the Contractor shall promptly furnish such additional or alternative security as may be required by EGAT from time to time to protect the interests of EGAT up to an amount equal to the amount of the security.

In the event of any default or breach of this Contract by the Contractor, EGAT may convert into money any performance security which does not consist of money, and the proceeds shall be deemed to be a cash deposit under this Article. EGAT shall not be liable for any cost, expenses and/or loss incurred in connection with such conversion.

The performance security, in case of a bank guarantee, or letter of guarantee, shall be in conformity with the specimen acceptable to EGAT as shown herein at the end of these General Conditions.

E-13. Inspection and Tests

All Equipment furnished and all Work performed under this Contract shall be subject to inspection by EGAT or EGAT's authorized representatives at its option. while such Work is in progress to ascertain that the completed Work will comply in all respects with the standards and requirements set forth in the Contract Documents. Notwithstanding such inspection, the Contractor will be responsible for the acceptability of the finished Work.

EGAT or EGAT's representatives shall at all times have access to the Work whenever it is in preparation or progress and the Contractor shall provide proper facilities for such access and shall furnish promptly, without additional charge, all facilities, labor and material reasonably needed for safe and convenient inspection by EGAT or EGAT's representatives. The Contractor shall notify EGAT at least two (2) Months in advance

DRAFT

when and where the Equipment and the Work will be available for each inspection and test. Any expense incurred by EGAT or EGAT's representatives to inspect the Equipment and the Work or to attend the test caused by false call of the Contractor for inspection and tests shall be borne by the Contractor.

If any Work should be covered up, or otherwise made inaccessible, without the approval of EGAT, it shall, if required by EGAT, be uncovered and made accessible for examination. Any such cover, which is required in the finished Work, shall be restored to EGAT's satisfaction at the Contractor's expense.

The acceptance of any Work or Equipment covered by these Contract Documents, or the making or waiving of any inspection or witnessing of any tests shall in no way relieve the Contractor of full responsibility for the quality, character and satisfactory operation and performance of the complete Work, and every part of it, as outlined in these Contract Documents, nor shall it prejudice or affect the rights of EGAT as set forth in the Contract.

Unless otherwise specifically provided in the Contract, the expenses directly required for all labor, tools, instruments, other materials and Equipment necessary for performance of the tests shall be borne by the Contractor.

The Contractor shall at his own expense conduct shop tests in accordance with the Specifications and submit the results of the tests to EGAT upon completion of tests. EGAT reserves the right to inspect all Equipment either in person or via video conference during its manufacture or fabrication and prior to its preparation for shipment, to inspect its packing when ready for shipment, and to witness any or all tests.

In the event the results of the tests do not satisfy the requirements of the Specifications or the guaranteed performance, the Contractor shall rectify to improve the Equipment until satisfactory results are obtained and shall conduct all necessary retests at his own expense.

Any delay in delivery due to the retest shall not constitute a release of the Contractor from his responsibility for delay. Any expenses incurred by EGAT in attending these retests shall be borne by the Contractor.

EGAT reserves the right to send one or more of EGAT's employees, not as inspectors, to the Contractor's plant to witness the fabrication, assembly and testing of any or all parts of the Equipment being furnished under this Contract. Travelling expenses and per diem of such employee or employees shall be borne by EGAT.

DRAFT

E-14. Preparation for Shipment and/or Delivery

The Contractor shall submit shipment and/or delivery schedule for EGAT's approval at least thirty (30) Days in advance before each shipment and/or delivery is made. No shipment and/or delivery shall be made prior to EGAT's approval which will be notified to the Contractor within fifteen (15) Days after receipt of the said shipment and/or delivery schedule.

All imported and local Equipment to be delivered under this Contract shall be satisfactorily packaged in such a manner to protect them from damage during transportation and for outdoor storage at the site in hot, wet, humid and dusty conditions. In addition, the imported Equipment shall also be satisfactorily packaged for moist tropical ocean shipment. Where necessary, heavy parts shall be mounted on skids so that cable slings for handling can readily be attached. Where it is unsafe to apply external slings to a package, attached slings shall be provided and shall project through the package so that attachment can readily be made.

In order to keep the damage to non-water proof Equipment during the transportation at minimum level, the Contractor and/or supplier is required to put an umbrella mark on every package of the Equipment.

In order to accelerate the dispatch of the Equipment to the site, the Contractor is required to arrange packaging of the Equipment in such a manner that a complete set of one unit shall be packed in package(s) or crate(s) with indication of designated substation but each individual package or crate shall contain the Equipment for only one unit or part of a complete set of one unit or otherwise as directed in the Instructions for Packaging attached at the end of Section E. General Conditions.

For Power Transformer and Shunt Reactor, in addition, all accessories, which are packed in aforesaid manner shall be contained in a container per transformer except for transformer insulating oil, radiators and conservator including other accessories which for dimensional reason after packaging are unable to be contained in the said container. However, spare parts shall be contained in a separate container per each shipment or Contract to be awarded. The containers to be used shall become the property of EGAT. The dimensions of containers shall be as follows : -

Container Dimensions			Door Dimensions		
Height	2.59	m.	Height	2.28	m.
Width	2.44	m.	Width	2.33	m.
Length	6.05	m.			

In addition, details of Equipment and substation destination per container shall be identified in Bill of Lading.

DRAFT

Detailed breakdown prices for spare parts of Equipment shall be also indicated in the invoice.

Prior to delivery of all Equipment, packaging details shall also be submitted to EGAT for approval.

The cost incurred for repair or replacement of any damages to the Equipment due to improper packaging shall be at the Contractor's expense.

Each individual package or crate shall be clearly and plainly tagged or marked for identification as follows:

EGAT, THAILAND
PROJECT NAME :_____
CONTRACT NO. :_____
SUBSTATION :_____
CASE NO. :_____
ITEM NO. :_____
DESCRIPTION :_____
EGAT'S SERIAL NO. :_____(if any)

In addition to this, the following instructions shall be observed :

a. Each box, crate, case, bundle or piece of loose Equipment shipped must show the following information clearly marked on its body :
   1. Gross weight in kilograms
   2. Net weight in kilograms
   3. Dimensions in centimeters

b. All boxes, crates, cases, bundles, loose pieces, etc. must be marked consecutively from No. 1 upward throughout all shipments to completion of the order without repeating the same number.

c. The packing list must indicate whether shipment is partial or complete, and shall incorporate the following information on each container, etc., according to its individual shipping number:
   1. Export case markings
   2. Case number
   3. Container number (for Power Transformer and Shunt Reactor)
   4. Item number
   5. Gross weight and net weight in kilograms
   6. Dimensions in centimeters
   7. Complete description of Equipment
   8. EGAT's serial No. (if any)

DRAFT

E-15. Clearance and Weight Limitations

The largest unloading facilities at Bangkok Wharf are 35 metric ton cranes. Lifts heavier than 35 tons will have to be handled by ocean freighter on-board lifting equipment. Ocean freighters of the 10,000 tons class regularly calling at Bangkok Wharf have off-loading capacities to handle 50 tons.

The largest unloading facilities at Laem Chabang Port are 30 metric ton cranes. Lifts heavier than 30 tons will have to be handled by ocean freighter on-board lifting equipment.

Generally, unloading at Thai Port and highway transportation are subject to the following limitations:

Dimensions	Limitations		
	Unloading at Bangkok Wharf/ Highway Transportation		Unloading at Laem Chabang Port/Maptaphut Port
Weight (tons)	60.0	>60.0-135.0	120.0
Width (meters)	3.5	3.5	4.5
Length (meters)	10.0	10.0	25.0
Height from Loading Platform (meters)	3.7	4.0	4.0

The Contractor shall therefore exercise due care to pack the Equipment to meet the above transport limitations.

For Power Transformer and Shunt Reactor, the shipping weight of the largest part is indicated in Ratings and Features.

E-16. Shipment

Shipment of Equipment from port of embarkation to the final port of discharge shall be effected by using Thai vessels through the sea freight forwarder appointed by the Contractor. The Contractor is required to notify EGAT of the name of the sea freight forwarder one (1) week prior to shipment.

DRAFT

According to the regulations of ***the Maritime Promotion Division***, Marine Department (as amended from time to time), shipments by non-Thai vessels can be made after receipt of permission granted by ***the Maritime Promotion Division***, Marine Department as requested by the Contractor.

The Contractor is, therefore, required to immediately contact ***the Maritime Promotion Division***, Marine Department for such permission with supporting documents of the case thereof for arrangement of the permission in advance.

The Contractor shall follow all other regulations stated in the Mercantile Marine Promotion Act B.E. 2521 and the regulations of ***the Maritime Promotion Division***, Marine Department (as amended from time to time).

The Contractor shall be liable for any and all costs and expenses, losses and/or damages suffered by EGAT as a result of the Contractor's failure to comply with such regulations.

For more information, the Contractor may contact ***the Maritime Promotion Division, Marine Department at telephone No. 66 2233 1311-8 extension 387 and facsimile No. 66 2639 4778, https://maritimepromotion.md.go.th/***

All imported Equipment shall be shipped on Conference Line or on seaworthy oceangoing vessels which are members or associate members of the International Association of Classification Societies (IACS) and ISM Code Certified Vessels. Vessels over fifteen (15) years of age shall not be used for shipment under this Contract unless they : -

a) have been used for the carriage of general cargo on an established and regular pattern of trading between a range of specified ports and do not exceed twenty-five (25) years of age, or

b) were constructed as containerships, vehicle carrier or double-skin open-hatch gantry crane vessels (OHGCs) and have been continuously used as such on an established and regular pattern of trading between a range of specified ports, and do not exceed thirty (30) years of age.

Shipment shall be made under deck except for such Equipment which for dimensional reasons cannot be stowed in the vessels hold. In case Equipment cannot be stowed in the vessel hold, permission shall be obtained from EGAT prior to loading such Equipment on deck. Such approval shall not be unreasonably withheld. The Contractor shall in any case be responsible for proper packing for protection of such Equipment loaded on deck of the vessel. Shipment of all Equipment by dry cargo container will be accepted, but all the incidental expenses shall be borne by the Contractor.

For shipment of Equipment under this Contract, transshipment is allowed.

DRAFT

Any delicate Equipment, materials, instruments and tools including but not limited to computers, electronic parts, etc., shall be shipped by airfreight. The Contractor shall be responsible for proper packing for protection of such Equipment loaded on cargo hold of the aircraft.

Air freight shipment to airport of disembarkation in Thailand shall be effected through the air freight forwarder appointed by the Contractor. The Contractor is required to notify EGAT of the name of the air freight forwarder one (1) week prior to shipment.

E-17. Documents Required for Each Shipment

a. For Seafreight

For accounting procedure, the Contractor is required to send to EGAT the bill of lading, invoice and master packing list immediately by ***letter submitted electronically or by electronic mail (E-mail)*** but not later than three (3) Days after the Equipment are actually loaded free on board (FOB Vessel) at the port of Shipment.

One (1) original negotiable bill of lading, three (3) original signed invoices and packing lists shall be mailed directly to EGAT by express airmail within four (4) working days after the date of departure of the ocean-going vessel from the port of shipment.

Two (2) original negotiable and five (5) copies of non-negotiable bill of lading, ten (10) original signed invoices and three (3) copies of packing lists shall be submitted to EGAT through the Bank within the time as specified in the letter of credit. - This requirement is applied only in case payment is made by letter of credit.

b. For Airfreight

For accounting procedure, the Contractor is required to send to EGAT the airway bill, invoice and master packing list immediately by ***letter submitted electronically or by electronic mail (E-mail)*** but not later than three (3) Days after the Equipment are actually loaded on the air carrier at the airport of departure.

Three (3) original signed invoices and packing lists shall be attached to the airway bill and dispatched together with the airfreight shipment.

One (1) copy of airway bill, two (2) original signed invoices and packing lists shall be sent directly to EGAT by courier within four (4) working days after the date of departure of the carrier from the airport.

Two (2) copies of airway bill, ten (10) signed invoices and three (3) copies of packing lists shall be submitted to EGAT through the bank within the time as specified in the letter of credit. - This requirement is applied only in case payment is made by letter of credit.

DRAFT

To act in accordance with the rules and regulations of the Customs Department of the Kingdom of Thailand, as well as to enable EGAT to expedite clearing the Equipment from the Customs House accordingly, the following declarations, other than regular statements, have to be made in English in the invoice for any transaction concluded with EGAT.

a. Country from which Equipment is purchased as well as country of origin; if the Equipment is produced in the country or group of countries where there are trade agreements between such country or group of countries and the Kingdom of Thailand, preferential treatment on import duty and taxes for importation of the Equipment is required;

b. Electricity Generating Authority of Thailand as consignee and Thailand as consigning country

c. Date and Number of Contract;

d. Name of Project, if any;

e. Marking and numbers, as well as gross weight and volume;

f. Details of Equipment, i.e. names, kinds, qualities, quantities, net weights, and other particulars as available for each type including trademarks or other symbols of such Equipment. If there are no trademarks or symbols, the invoice shall indicate "no trademarks", "no symbols", as the case may be;

g. Selling price or value of Equipment per unit expressed in the type of currency under transaction and representing actual price or value of Equipment as stated in the price schedules or price breakdown, as the case may be;

If the Contractor fails to specify the price or value of Equipment according to the Contract in the invoice prepared for shipment, the Contractor shall be held responsible for the following:

1. In case of over value or price of Equipment stated in the invoice, the Contractor shall be responsible for reimbursement to EGAT for the import duty and taxes (excluding value added tax) collected by the Customs Department and the insurance premium (excluding value added tax) on the over value or price of Equipment as well as interest. Value added tax imposed in connection thereto shall be EGAT's responsibility. The Contractor shall also refund to EGAT the amount of over value payment as well as interest. The interest to be applied under this Article shall be Minimum Overdraft Rate announced by Krung Thai Bank plus two (2) (MOR+2) percent calculated from the date of EGAT's payment of the over value payment, import duty and taxes as well as insurance premium until the date of the Contractor's settlement of the same in full.
2. In case of under value or price of Equipment stated in the invoice, the Contractor shall be responsible for reimbursement to EGAT the surcharges imposed on additional import duty and taxes at the rate currently established by

DRAFT

the Customs Department as well as interest (if any) and also shall be responsible for compensation to EGAT for cost incurred in repair or replacement of the damaged Equipment which is not covered by insurance due to under value or price of Equipment stated in the invoice.

h. Other expenses:

1. Packing charges (if any)
2. Insurance premiums (if insured)
3. Freight
4. Others (if any)

The Contractor shall, at the time of shipment, prepare and submit a certificate of origin(s) for the Equipment required as per point a. above together with the invoice and other shipping documents for EGAT to obtain the benefit from preferential treatment on import duty and taxes for importation of the Equipment from the country or group of countries where there are trade agreements between such country or group of countries and the Kingdom of Thailand. For each shipment, all items of Equipment requiring certificate of origin shall be included in only one (1) certificate of origin except as otherwise specified in any trade agreement. The trade agreements shall include but not be limited to the following:

1. Common Effective Preferential Tariff (CEPT) Scheme for the ASEAN Free Trade Area (AFTA);
2. Agreement between the Kingdom of Thailand and Japan for an Economic Partnership; and
3. Agreement between the Government of the Kingdom of Thailand and the Government of the People's Republic of China on Accelerated Tariff Elimination under the Early Harvest Programme of the Framework Agreement on Comprehensive Economic Cooperation between ASEAN and China.

If the Contractor advises EGAT in writing before shipment that it is unable to provide a certificate of origin to EGAT, the Contractor shall be responsible for all costs incurred including but not limited to reimbursement to EGAT for the excess amount of the import duty and taxes (except value added tax) paid by EGAT to Customs Department.

Further to the above, if the Contractor delays to provide a proper certificate of origin to EGAT, the Contractor shall be responsible for all costs incurred including but not limited to reimbursement to EGAT for the storage charges and the interest on the excess amount of import duty and taxes (except value added tax) paid by EGAT to the Customs Department at the rate of Minimum Overdraft Rate announced by Krung Thai Bank plus two (2) (MOR+2) percent calculated from the date of EGAT's payment of import duty and taxes up to the date of receipt of the excess amount of import duty and taxes refund from the Customs Department.

However, if the Contractor fails to provide such proper certificate to EGAT, the Contractor shall be responsible for all costs incurred including but not limited to reimbursement to EGAT for the storage charges and the excess amount of import duty and taxes (except value added tax) paid by EGAT to the Customs Department as well as interest on the said excess amount of import duty and taxes at the rate of Minimum

DRAFT

Overdraft Rate announced by Krung Thai Bank plus two (2) (MOR+2) percent calculated from the date of EGAT's payment of import duty and taxes up to the date of acknowledgement that the certificate cannot be issued in conformity with requirement of the Free Trade Agreement.

The Contractor is also required to study the existing trade agreements and any new trade agreement between the Kingdom of Thailand and a country or group of countries published in the website of Customs Department (www.customs.go.th) and/or Ministry of Commerce (www.moc.go.th), and ask for more information from EGAT in order that EGAT can obtain the benefit from preferential treatment on import duty and taxes for importation of the Equipment from the country or group of countries where there are trade agreements between such country or group of countries and the Kingdom of Thailand.

Fullest conformity with the requirements of the Customs Department of the Kingdom of Thailand mentioned above is essential as a condition precedent.

Unless by force majeure, failure to furnish EGAT with these shipping documents and the certificate of origin within the specified period and strictly in accordance with conditions stipulated above thereby causing impossibility of making prompt customs clearance of the Equipment from Thai Port, the Contractor shall, upon receipt of the EGAT's notice, reimburse EGAT for go down rent / storage charge and other expenses arising from or in consequence of the nonconformity with the above specified requirement.

E-18. Force Majeure

The Contractor shall not be in default under this Contract because of any delays in delivery or in completion of the Work on the separable parts thereof which delays are caused by force majeure; provided, that the Contractor shall notify EGAT in writing of the cause of any such delay within fifteen (15) Days after the end of the event which results in the delay. Upon receipt of any such notice of delay, EGAT will promptly ascertain the facts and the extent of the delay and will extend the time for the delivery and assembly of the Equipment or the time for completing the Work when, in the opinion of EGAT, the delay is caused by force majeure or the findings of fact to justify an extension. EGAT's decision shall be binding on the Contractor, subject to the provision of Article E-31. Dispute Resolution included in these General Conditions.

"Force Majeure" shall be defined as any event, the happening or pernicious results of which could not be prevented even though a person against whom it happened or threatened to happen were to take such appropriate care as might be expected from him in this situation. (Normal rains, inundation, dearth of water, and the overturning or sinking of barges in canals, rivers, or streams and similar events shall not be considered as force majeure).

DRAFT

E-19. Transportation Insurance

Transportation insurance from the port of shipment/from the Contractor's premise(s) to EGAT's Store and/or EGAT's site will be under the responsibility of EGAT.

E-20. Transfer of Title

The title of ownership for the Equipment furnished under this Contract shall be passed to EGAT at the time the Equipment is actually loaded onto the vessel at the port of shipment, or into charge of the air carrier at the port of departure, or at the time the Equipment is actually delivered ex-works and the Contractor's statement or delivery order confirming delivery of the Equipment ex-works has been certified by EGAT's representative. However, this transfer of title shall not be construed as an acceptance of the Equipment. The Contractor shall continue to be responsible for the quality and performance of the Equipment, and for their compliance with the Specifications as well as any loss, theft or damage of the Equipment during the course of execution of the Contract, until final acceptance of the Work by EGAT and the fulfillment of the guarantee provision of the Contract.

E-21. Changes and Extra or Omitted Work

EGAT may at any time authorize changes in, additions to, or deductions from the Equipment to be furnished under the Contract. Changes, additions, or deductions shall be authorized only by written notice served by EGAT upon the Contractor and such notice shall be treated as an integral part of the Contract. Adjustments, if any, in the amounts to be paid to the Contractor by reason of any such change, addition, or deduction shall be determined by one or more of the following methods :

a. by unit price contained in the Price Schedules

b. by an acceptable lump sum or unit price proposal from the Contractor

c. on a cost-plus limited basis not to exceed a specific limit. A cost-plus limited basis is defined as the cost of Equipment, labor, and insurance, plus fifteen (15) per cent of the said cost to cover superintendence, general expense, and profit.

No claim for an addition to the Contract Price shall be valid unless authorized as described in this Article. If the parties are unable to agree to the method to be employed in determining adjustments in the Contract Price, the method shall be determined by EGAT.

DRAFT

E-22. Termination and Suspension of Contract

EGAT may, by written notice sent to the Contractor, terminate the Contract, in whole or in part, at any time for its convenience. The notice of termination shall specify that termination is for EGAT's convenience, the extent to which performance of work under the Contract is terminated, and the date upon which such termination becomes effective.

The Equipment that are completed and ready for shipment within thirty (30) Days after the Contractor's receipt of notice of termination shall be purchased by EGAT at the Contract terms and prices. For the remaining Equipment, EGAT may elect :

a. to have any portion completed and delivered at the Contract terms and prices and/or

b. to cancel the remainder and pay to the Contractor an agreed amount for partially completed Equipment and for materials and parts previously procured by the Contractor.

E-23. Default and Termination

Should the Contractor :

a. fail to furnish the Equipment or carry out the Work in accordance with this Contract; or

b. refuse or fail to prosecute the Work or any part thereof which shall ensure its completion within the time specified in this Contract or any authorized extension of time by EGAT; or

c. fail to furnish the Equipment and/or complete the Work or any part thereof within the time specified in this Contract or any authorized extension of time by EGAT; or

d. commit any breach or fail to comply with any of the provisions of this Contract; or

e. notify EGAT in writing that the Contractor is unable or unwilling to furnish the Equipment or complete the Work or any part thereof; or

f. become insolvent or bankrupt or make an arrangement or composition with the Contractor’s creditors or, being a corporation, go into liquidation whether compulsory or voluntary (except for the purpose of reorganization); or

g. by himself or by any person on his behalf, give or offer any money or benefit of forbearance to any employee of EGAT and/or any employee of the Engineer who has duties or responsibilities in connection with the acceptance of the proposal or the making of this Contract;

DRAFT

then, in any of such events, the Contractor shall be in default under this Contract, and EGAT may at his sole discretion take any one or more of the following actions that it considers appropriate :

(i) suspend payments under this Contract until the default has been rectified;

(ii) cancel or terminate the Contract in whole or in part;

(iii) take that part of the furnishing of Equipment or the Work, in respect of which the delay or default has occurred, out of the hands of the Contractor or any other person in whose control or possession it is;

(iv) reduce the Contract Price by an amount equal to the reduction in value to EGAT of the Equipment as actually delivered.

The Contractor shall be liable for all losses and/or damages including but not limited to the increased installation costs and increased administrative costs, suffered by EGAT as a result of the Contractor's default. The Contractor shall have no claim for payment with respect to Work thereafter performed.

All such damages may be recovered by EGAT from the Contractor in any court of competent jurisdiction or, without prejudice to that right, by deduction from any money due or becoming due to the Contractor under this Contract, or from any security deposited, or, after use of the property and materials of the Contract for completion of the work, as provided in this Contract, such property and materials may be sold and the proceeds shall be applied to any remaining obligations of the Contractor.

E-24. Indemnification by the Contractor

The Contractor shall fully indemnify and hold harmless EGAT and its employees and officers from and against any and all suit, actions or administrative proceedings, claims (including any claim for copyright or patent infringement), demands, losses, costs, expenses (including attorney's fees and expenses) and damages of whatsoever nature except breach or default, in respect of death or injury of any person or loss of or damage to any property caused by any act or omission of the Contractor or the Contractor's own officers, directors, agents, employees, Contractors or Subcontractors arising in any manner whatsoever, except any injury, death or property damage caused by the negligence of EGAT, its contractors, employees, officers or agents.

DRAFT

E-25. Limitation of Liability

The liability of the Contractor to EGAT arising from default or termination under the Contract in aggregate shall not exceed the total Contract Price.

E-26. Consequential Damages

Neither party shall be liable to the other party for any indirect, incidental, consequential or punitive damages as a result of the performance or nonperformance of the obligations imposed pursuant to this Contract**,** unless such indirect, incidental, consequential or punitive damages are foreseen or could have been foreseen at the time of execution of the Contract.

E-27. Vesting of Contract in Receiver

If the Contractor shall compound with his creditors, or shall become bankrupt or insolvent, or carry on business under a receiver, or become incapable from any cause whatsoever of carrying out the Work, any such receiver or any person in whom by law the Contract shall become vested, shall forthwith give notice to EGAT of the fact that the Contract has become vested in it and shall take all reasonable steps to carry on the Work at a rate fulfilling the Contract requirements. Thereupon, if EGAT so desires, such receiver or other such person as aforesaid shall have the option, during the period of one (1) Month from the date when the Contract becomes so vested in it, of carrying out the Contract. In the event of the Work being stopped, this option shall be opened only for a period of fourteen (14) Days from the stoppage date. In the event of the receiver or such other person not electing to carry out the Contract or EGAT not approving the carrying out of the Contract by the receiver, the Contractor shall then be in default and EGAT may proceed in accordance with Article E-23. Default and Termination.

DRAFT

E-28. Extension of Time

If, by reason of any of the following :

a. Negligence or default on the part of EGAT or its agents,

b. Alteration in or addition to the Work,

c. Suspension of the Work at the written direction of EGAT for reasons beyond the control of the Contractor,

d. War, insurrection, riot or civil commotion or delay caused thereby,

e. Strikes, not caused by the Contractor's management,

f. Lawful order of civil or military authorities,

g. Unusually natural calamities, acts of God,

h. Any other unforeseen circumstance beyond the Contractor's control.

The Contractor claims that he has been unduly delayed in the progress of the Work, he shall make written request to EGAT for an extension of time for completion of the Work or any portion of it.

Should EGAT consider such claim to be valid, it will grant such extension of time as may seem reasonable to EGAT, without thereby prejudicing or in any manner affecting the validity of the Contract. No extension of time will be granted unless the Contractor makes the written request within fifteen (15) Days after the end of the event which results in the delay.

Other than claiming an extension of time for completion of the Work or any portion of it, the Contractor shall not have any further recourse or claim against EGAT, nor shall he have any right of action against EGAT for loss or damage suffered by reason of such delay.

E-29. Failure to Meet Requirements

EGAT shall have the right to require the Contractor to make any changes in the Equipment or Work covered by this Contract, which may be necessary in the opinion of EGAT, to make the Equipment or Work conform to the requirements of the Contract Documents, without additional cost to EGAT. Any defects in the Equipment or workmanship or other failure, to meet the requirements of the Contract, including errors and omissions on the part of the Contractor, which are disclosed prior to final payment or prior to acceptance by EGAT,

DRAFT

or after completion of all tests, whichever occurs at the later date, shall, if so directed by EGAT, be corrected or replaced promptly by the Contractor at the expense of the Contractor.

In case of replacement of Equipment due to non-conformity with EGAT's specifications and/or defects found prior to acceptance of Equipment by EGAT or replenishment for short pack or returning of repaired Equipment due to such defect, the Contractor shall, upon receipt of EGAT's written notice supported with the receipt issued by the relevant parties, be responsible for reimbursement of the expenses incurred for the following :

- All re-export charges (if any)
- Import duty and taxes
- Landing charges, rents and handling charges (ocean freight)
- Storage charges (air freight)
- Truck hire
- Labour charges

These expenses shall exclude value added taxes, which will be EGAT's responsibility.

The contractor shall be also responsible for reimbursement of Service charges for customs clearance (if any) including value added tax.

Any latent defects not disclosed prior to the date of final payment or prior to acceptance or after completion of all tests, whichever occurs at the later date, but disclosed within the guarantee period as specified in Article F-10.a., shall be corrected or replaced promptly by the Contractor at the expense of the Contractor, except that the cost of import duty and taxes, inland transportation and installation of the replacement parts for foreign supply Equipment, and the cost of inland transportation and the installation of the replacement parts for local supply Equipment will be borne by EGAT.

For Equipment specified in Data Sheet, in case EGAT, at its sole discretion, requires the Contractor to replace any defected Equipment, the Contractor shall replace the Equipment with the whole new set at its own costs and expenses including the cost of all re-export charges (if any), import duty and taxes, landing charges, rents and handling charges (ocean freight), storage charges (air freight), truck hire, labour charges, service charges for customs clearance, inland transportation and installation of the Equipment.

The Contractor shall extend the provisions of his liability to cover all repair and replacement parts furnished from the day immediately following the date of completion of such repair or replacement as follows:

DRAFT

Time of Malfunctioning and/or Defect Found	Guarantee Period Extension				
	Equipment with 1-Year guarantee period	**Equipment with 2-Year guarantee period**	**Equipment with 3-Year guarantee period**	**Equipment with 4-Year guarantee period**	**Equipment with 5-Year guarantee period**
First Year	For a new period of one (1) Year.	For a new period of two (2) Years.	For a new period of three (3) Years.	For a new period of four (4) Years.	For a new period of five (5) Years.
Second Year	n/a	For a new period of one (1) Year.	For a new period of two (2) Years.	For a new period of three (3) Years.	For a new period of four (4) Years.
Third Year	n/a	n/a	For a new period of one (1) Year.	For a new period of two (2) Years.	For a new period of three (3) Years.
Fourth Year	n/a	n/a	n/a	For a new period of one (1) Year.	For a new period of two (2) Years.
Fifth Year	n/a	n/a	n/a	n/a	For a new period of one (1) Year.

The Contractor shall, if required by EGAT in writing, search under the directions of EGAT for the cause of any defect, imperfection or fault appearing prior to the acceptance of Equipment or in the period of maintenance guarantee. Unless such defect, imperfection or fault shall be one for which the Contractor is liable under the Contract, the cost of the work carried out by the Contractor in searching as aforesaid shall be borne by EGAT. If such defect, imperfection or fault shall be one for which the Contractor is liable under the Contract, the cost of the work carried out in searching as aforesaid shall be borne by the Contractor and he shall in such case repair, rectify and make good such defect, imperfection or fault at his own expense.

DRAFT

E-30 Operation or Use of Unsatisfactory Equipment

If the operation or use of the Equipment proves to be unsatisfactory to EGAT, EGAT shall have the right to operate and use such Equipment until they can be taken out of service for correction by the Contractor of such latent defects, error, or omissions and for replacement in whole or in part, if correction is unsuccessful or infeasible. The period of such operation or use shall not exceed one (1) Year from the day immediately following the date of acceptance of Equipment by EGAT.

E-31. Dispute Resolution

Any dispute arising out of or in connection with this Contract, interpretation, breach, or termination thereof shall be settled by amicable discussion between authorized representatives of each Party. Either Party may at any time send a written notice to the other Party requesting for an appointment of authorized representative for a settlement of any dispute hereunder. The Parties agree to make diligent and good faith attempt to resolve such dispute in an equitable manner. If the authorized representatives of both Parties are unable to resolve such dispute within 30 Days after commencement of the discussion for dispute resolution or other extended period of time as mutually agreed by both Parties, either Party may file a lawsuit to the court having jurisdiction in Thailand for settlement of such dispute. Each Party agrees that the final court judgment shall be conclusive and binding upon the Parties.

Pending decision of the court, both Parties shall continue to perform their respective obligations under this Contract.

E-32. Language and Numbers

All drawings, designs, specifications, manuals, nameplates, markings, operating instructions, statements, schedules, notices, documents, and all written communications between EGAT and the Contractor, concerning this Contract, shall be in the English language and in the metric system of weights and measures unless otherwise specified.

DRAFT

SPECIMEN OF GUARANTEE

To : Date

Electricity Generating Authority of Thailand
Bangkruai, Nonthaburi, 11130

Thailand

Re : Performance Security for Contract No. _____

Gentlemen :

In accordance with the provision of the Contract for_____No. _____(hereinafter referred to as the Contract) the contents of which have been noted by us that Messrs._____(hereinafter referred to as the Contractor) has to deposit with Electricity Generating Authority of Thailand (hereinafter referred to as EGAT) a Performance Security for the proper and faithful performance of the Contract in the amount of _____ (in words :_____) which is_____per cent, round up to the nearest whole number, of the total Contract Price, we, the _____as instructed by the Contractor, agree unconditionally to irrevocably guarantee as primary Obligor, the payment to EGAT on its first demand, without whatsoever right of objection on our part and without its first claim to the Contractor, in the amount not exceeding : ____(in words :_____) in the event the obligations expressed in the above mentioned Contract have not been fulfilled by the Contractor, giving EGAT the right of claim for penalty, damages, liquidated damages or any expenses for which the Contractor may become liable to EGAT under the Contract.

We further agree that no extension of time, change in, addition to or other modification of terms of the Contract or Work to be performed thereunder, or of the Specifications or other Contract Documents, which may be made between EGAT and the Contractor, shall in any way release us from any liability under this guarantee, and we shall thereby waive notice of any such change, addition or modification.

This Performance Security shall be valid and remain in full effect from the date of execution of the Contract until the issuance of the Acceptance Certificate by EGAT or the acceptance of Equipment deemed to be made by EGAT against submission by the Contractor of the Maintenance Security accepted by EGAT.

Yours very truly,

_____
Authorized Signature

DRAFT

Instructions for Packaging

Name of Equipment	Packed per complete set of one unit/units	Packed per Substation
1. Power Transformer	√(1)	-
2. Distribution Transformer	√(1)	-
3. Shunt Reactor	√(1)	-
4. Surge Arrester	√(1)	-
5. Current Transformer	√(1)	-
6. CC, CCVT, VT	√(1)	-
7. GIS	-	√
8. Shunt Capacitor Bank	***√(1)***	-
9. Power Circuit Breaker	√(1)	-
10. Disconnecting Switch	√(1)	-
11. AC/DC Dist. Board, LCUS, LRP	√(1)	-
12. Stationary Battery	√(1)	-
13. Lighting Fixture	-	√
14. Identification and Danger Notice Plate	-	√
15. Control and Protection System	√(1)*	-
16. Computerized Control System	-	√
17. Power Line Carrier	-	√
18. Teleprotection	-	√
19. Line Trap	-	√
20. Battery Charger	√(1)	-

Note : 1. Number in parenthesis represents maximum number of complete set of one unit/units packed in an individual package or crate.

2. * In case of spare for control and protection system, such Equipment shall be packed per board, but in case of loose control and protection system, such Equipment of whichever substation shall be packed in the same package or crate of that substation.

3. Other substation Equipment not mentioned shall be packaged in such a manner that it will not cause unreasonable expenses or delay to EGAT in distribution of such Equipment to the designated substation.

4. Prior to delivery of all Equipment, packaging details shall be submitted to EGAT for approval.

DRAFT

SECTION F

SPECIAL CONDITIONS

DRAFT

SPECIAL CONDITIONS

F-1. Scope of Work

The Contractor shall perform, furnish and deliver the Equipment as required by these Contract Documents.

For imported Equipment, Transportation from Thai Port to sites shall be EGAT's responsibility. However, the Contractor shall, at his own expenses and responsibility, perform unloading the Equipment at the port or airport of disembarkation in Thailand.

For local supply, Transportation from the Contractor's premises to the sites shall be EGAT's responsibility. However, the Contractor shall, at his own expenses and responsibility, perform loading the Equipment on EGAT's trucks or trailers at the Contractor's premises and shall be liable for all losses and/or damages to the Equipment as well as any expenses causing therefrom.

F-2. Responsibility of Contractor

The Contractor shall be solely responsible for ensuring that the Work throughout is executed in the most substantial, proper and workmanlike manner, with the best quality materials and conforming to the best engineering practice for the operating conditions specified; the drawings and quality control are performed or made in accordance with the Contract; and services reasonably to be furnished though not specifically provided in the Contract are furnished; all to EGAT's entire satisfaction notwithstanding that certain portions of the work may be executed by the Subcontractor.

F-3. Cooperation with Other Contractors

The Contractor, if required, shall exchange with other Contractor furnishing associated Equipment, all necessary drawings and other information required to insure the complete and proper design and manufacture of the Equipment to be furnished under these Specifications. One (1) copy of all drawings and correspondence, relating to information interchanged between Contractors, shall be sent to EGAT in Nonthaburi, Thailand.

DRAFT

***F-4. <u>Supervision of Installation</u>**

Subject to the desire and decision of EGAT, the Contractor may be required to furnish the services of qualified and experienced supervisor(s) who has at least three years experience on the particular Work required under the Contract and shall be the permanent employee of the manufacturer of the Equipment. For 230 kV (or lower) Power Circuit Breaker and 115 kV (or lower) Gas-Insulated Switchgear, the permanent employee of the representative of the manufacturer is acceptable, provided that such employee is certified by the manufacturer.

The scope of responsibility of the supervisor on behalf of the Contractor is as follows :

a. Supervise and be responsible for the installation, erection, adjustment, field test and commissioning of the Equipment.

b. Prepare formulation sheets for a check list, test sheet, release form and field report to be discussed with EGAT before performing the installation work.

c. Submit four copies of report summarizing the work performance, from the beginning to the completion of the supervisory period, to EGAT within one month after finish the installation work or final inspection. The report shall include the following :
   1. Note on pending matter i.e. faulty and omitted equipment, performance deficiency etc.
   2. Problem concerning installation performance.
   3. Photographs showing progress of the installation work periodically until the work is completed.

The Contractor shall, in each and every instance, cooperate fully with the construction personnel installing and/or operating the Equipment and the Work, the operations of the supervisor shall be coordinated with the program of construction at the site as directed by EGAT.

The supervisor shall report at EGAT in Nonthaburi, Thailand, on the date designated by EGAT after a reasonable advance notice from EGAT, and shall remain until the Equipment have been in satisfactory operation for at least ten (10) working days as determined by EGAT, unless released earlier by EGAT.

The installation supervisor must be able to understand, speak, read and write the English language fluently. Should an interpreter be necessary, the cost of such interpretation service shall be at the Contractor's expense.

*If installation supervisor is required as specified in Price Schedule, this provision shall apply to this Contract.

DRAFT

F-5. Acceptance Tests

After the Equipment have been installed and placed in satisfactory operation, they may be tested by and at the expense of EGAT to determine whether or not all requirements of these Contract Documents have been met and the Contractor's guarantees have been fulfilled. The Contractor will be permitted to have his representative present at his own expense. If the tests show that the requirements or guarantee have not been met, the Contractor shall, at his own expense, make all necessary corrections. Additional tests will then be made to demonstrate to EGAT's satisfaction the effectiveness of these corrections. These additional tests will be at the Contractor's expense. Unless the necessary corrections have been made, the conditions of the Contract shall be considered unfulfilled.

All tests will be performed in accordance with the latest applicable Test Codes, unless otherwise stated.

F-6. Failure to Meet Performance Guarantees

If EGAT elects to accept the Equipment which do not meet any performance guarantee or which do not meet other requirements of these Contract Documents, as may be determined by factory test, field test or operation under service conditions, appropriate adjustment will be made of the Contract Price for such Equipment; provided that no such adjustment will be made until after the Contractor has been given a reasonable opportunity to repair, improve, or replace defective Equipment or parts thereof wherever practicable.

F-7. Acceptance Certificate

When EGAT is satisfied with the Equipment or agrees to accept the Equipment under the provision of Article F-6. Failure to Meet Performance Guarantees and there are no major unsettled claims against the Contractor by EGAT, EGAT will issue a written Acceptance Certificate against submission by the Contractor of maintenance security(ies) as specified in Article F-12. Maintenance Security and effective for a period of time as specified in Article F-10.a.

The Acceptance Certificate will list all deficiencies and reservations as a result of the inspection and tests performed, if any.

The purpose of the maintenance security is to guarantee the proper functioning of the Equipment supplied by the Contractor with a provision that the effective period of the maintenance security shall automatically be extended in case that the obligations stipulated in Article F-10. Maintenance Guarantee are not fulfilled.

A form of maintenance security acceptable to EGAT is shown in Article F-12. Maintenance Security.

DRAFT

F-8. Payment

Payment in foreign currency will be made in the currency or currencies in which the price has been stated in the price schedules. The Contractor has to inform EGAT the mode of payment he requires for payment for foreign currency portion together with detail of bank account No., beneficiary's name and address etc. If the Contractor requires the payment of foreign currency portion to be paid directly to the suppliers, he has to inform EGAT which portion of the Contract Price, as stipulated in the term of payment of the Contract, to be paid accordingly. In case the local Contractor requires foreign currency or currencies to be paid directly to him, payment of such foreign currency or currencies will be made to the local Contractor in Thai Baht by using the selling exchange rate published by the Bank of Thailand on the payment date.

In case the Contractor requires the payment of foreign currency portion to be made through letter of credit, EGAT will, if there is no fault or any delay caused by the Contractor, establish the letter of credit in the name of the Contractor or Suppliers not later than thirty (30) Days after signing the Contract. The Contractor shall be responsible for all bank charges inside and outside Thailand and including opening, amendment, reimbursing charges, payment commission, cable charges, discrepancy fee, acceptance commission and others (if any) arising from Letter of Credit.

Payment in local currency will be made directly by EGAT.

The Contractor or beneficiary has to inform EGAT by mailed letter or ***letter submitted electronically or by electronic mail (E-mail)*** immediately the date upon which he has received the original letter of credit ***to be*** opened in his favour.

Payment will be made in the following manner :

a. Payment for Equipment (except Spare Parts and Optional Items)

Foreign Supply

1. Eighty (80) per cent of the Contract Price will be paid after delivery FOB Port of Shipment (FOB Vessel) on the basis of pro rata value of each shipment against presentation of invoices, shipping documents, EGAT's letters of approval for shipment and EGAT's letter of approval for test report* of the relevant Equipment including EGAT's letter(s) of approval for final drawings only for Control and Protection Equipment.

   *Test report means the report of tests specified in Article E-13. Inspection and Tests.

DRAFT

2. Ten (10) per cent of the Contract Price of each Schedule will be paid against presentation of Drawing and Document Acceptance Certificate to be issued by EGAT to certify the receipt of all drawings and documents required from the Contractor under Article F-11. Drawings and Documents to be Furnished by Contractor for such schedule, provided that payment shall not be made until EGAT has received from the Contractor the original signed negotiable Bill of Lading and appertaining documents giving evidence of shipment of the main Equipment of that Schedule.

3. Ten (10) per cent of the Contract Price of each Schedule will be paid after the Equipment have been installed, tested and operated or used for a period of 30 Days and the acceptance of the said Equipment has been made by EGAT against presentation of Acceptance Certificate to be issued by EGAT and submission of maintenance security by the Contractor. EGAT will list the minor pending claim(s), if any, and payment will be made by deducting such claimed amount.

   However, if, through no fault of the Contractor or of the Equipment, such installation, test and operation or use of the Equipment are delayed beyond a period of six (6) Months after complete delivery at Thai Port; payment of this ten (10) per cent will be made as soon as possible but not later than the ninth (9th) Month after complete delivery and it shall be deemed as if acceptance of Equipment is made by EGAT at the end of the said sixth (6th) Month and the guarantee period shall start therefrom against submission of maintenance security by the Contractor.

   In case there is some minor claim(s) or minor fault of the Contractor, the payment of this ten (10) per cent shall be made by deducting such claimed amount and the guarantee period of this part will start after such minor claim(s) has been settled by the Contractor and acceptance of which has been made by EGAT.

Local Supply

1. Eighty (80) per cent of the Contract Price will be paid on the basis of pro rata value of each delivery against presentation of the Contractor's statement or delivery order confirming the ex-works delivery of Equipment duly certified by EGAT's representative*, EGAT’s letters of approval for delivery and EGAT's letter of approval for test report** of the relevant Equipment including EGAT’s letter(s) of approval for final drawings only for Control and Protection Equipment.

DRAFT

*EGAT's representative means the authorized EGAT's Store personnel to verify the quantity of Equipment according to the packing list to be delivered to the Site.

**Test report means the report of tests specified in Article E-13. Inspection and Tests.

2. Ten (10) per cent of the Contract Price of each Schedule will be paid against presentation of Drawing and Document Acceptance Certificate to be issued by EGAT to certify the receipt of all drawings and documents required from the Contractor under Article F-11. Drawings and Documents to be Furnished by Contractor for such schedule, provided that payment shall not be made until EGAT has received from the Contractor the statement or delivery order and appertaining documents giving evidence of delivery of the main Equipment of that Schedule.

3. Ten (10) per cent of the Contract Price of each Schedule will be paid after the Equipment have been installed, tested and operated or used for a period of 30 Days and the acceptance of the said Equipment has been made by EGAT against presentation of Acceptance Certificate to be issued by EGAT and submission of maintenance security by the Contractor. EGAT will list the minor pending claim(s), if any, and payment will be made by deducting such claimed amount.

However, if, through no fault of the Contractor or of the Equipment, such installation, test and operation or use of the Equipment are delayed beyond a period of six (6) Months after complete ex-works delivery; payment of this ten (10) per cent will be made as soon as possible but not later than the ninth (9th) Month after complete delivery and it shall be deemed as if acceptance of Equipment is made by EGAT at the end of the said sixth (6th) Month and the guarantee period shall start therefrom against submission of maintenance security by the Contractor.

In case there is some minor claim(s) or minor fault of the Contractor, the payment of this ten (10) per cent shall be made by deducting such claimed amount and the guarantee period of this part will start after such minor claim(s) has been settled by the Contractor and acceptance of which has been made by EGAT.

DRAFT

b. Payment for Spare Parts

One hundred (100) per cent will be paid after complete delivery against presentation of invoices, shipping documents and EGAT's letter of approval for shipment for foreign supply or the Contractor's statement or delivery order confirming the delivery of Equipment ex-works duly certified by EGAT's representative* and EGAT's letter of approval for test report** of the relevant Equipment and the acceptance has been made by EGAT. The guarantee period shall start from the day immediately following the date of the acceptance of the Spare Parts.

*EGAT's representative means the authorized EGAT's Store personnel to verify the quantity of Equipment according to the packing list to be delivered to the site.

**Test report means the report of tests specified in Article E-13. Inspection and Tests.

c. Payment for Optional Items

Payment for Equipment

One hundred (100) per cent will be paid after complete delivery with presentation of invoices, shipping documents and EGAT's letter of approval for shipment and the acceptance has been made by EGAT. The guarantee period shall start from the day immediately following the date of the acceptance of Equipment.

Payment for Mechanical Operation Life Test (if any)

One hundred (100) per cent of the cost of the Mechanical Operation Life Test will be paid after the test has been performed successfully and test report has been accepted by EGAT.

d. Payment for Field Test Cost

One hundred (100) per cent of Field Test Cost will be paid after the test has been performed successfully and the test report has been accepted by EGAT.

e. Payment for Installation Supervisor

Payment for the services of the installation supervisor will be made within thirty (30) Days after his release by EGAT. Payment will be made on the basis of actual working man-days at the quoted cost per man-day up to a maximum equal to the total man-days quoted. For man-days exceeding the quoted total man-days, no payment shall be made by EGAT unless the Contractor can claim for any delays in

DRAFT

the progress of the work caused by EGAT. Any such additional man-days approved by EGAT shall be paid on the basis of the quoted man-day rate.

The number of quoted man-days shall include Sundays and shall cover a seven (7) day workweek, if required by the construction program. The working hours shall be forty-eight (48) hours per week, eight (8) hours per day, the working hours over 8 hours per day if requested by EGAT will be counted as overtime at 1½ times the regular hourly rate.

The amount to be paid for each Day for the services of the supervisor shall include for all salary, subsistence expense, insurance, compensations and personal expense of the supervisor, and all liabilities and responsibilities thereto. EGAT will pay for round-trip economy class air transportation for the installation supervisor between the Contractor's home office and Bangkok by the most expeditious and direct route on trip basis by draft after receipt of the Contractor's invoice supported with the used air ticket of such supervisor. The remission of immigration fees and taxes collectible by the Kingdom of Thailand shall not be paid by EGAT, as described in Article E-11. Fees and Duties.

After each payment is made, the Contractor or beneficiary shall issue and submit the receipt to EGAT at e-mail : FFMS@egat.co.th within three (3) calendar days upon receipt of such payment. The details of receipt shall include but not be limited to the following:

- ***Company name and address***
- ***The receipt date of payment***
- ***Lists of Goods/Services the payment is made for***
- ***Payment amount in numbers and in words***
- ***Recipient signature***

F-9. Liquidated Damages for Late Delivery of Equipment

In the event of failure by the Contractor to make delivery of any Equipment within the time set forth in the Contract, plus any extension thereof authorized by EGAT as provided in the Contract, such failure shall be a default under the Contract for which the Contractor shall be liable for payment to EGAT as liquidated damages at the rate specified in Data Sheet.

Whenever any Equipment under any item is to be used together with other Equipment in other item as specified in Price Schedule as a complete set or unit, the Contractor shall make sure that they shall be shipped together as a complete set or unit. Failure on the part of the Contractor to comply with this requirement, the liquidated damages for late delivery of partial shipment shall be imposed on the Contractor for the whole amount of the Contract Price of such related items.

DRAFT

Notwithstanding, in case the Contractor fails to make delivery of minor part of any Equipment within the time set forth in the Contract and such late delivery does not have any effect to the performance of the Equipment, the Contractor shall be liable for payment to EGAT as liquidated damages at the rate of one-tenth of one (0.10) per cent of the total price of the minor part of the Equipment not timely delivered for each Day of delay. The price of such delayed minor part of the Equipment shall be determined by EGAT. EGAT shall, at his own discretion, determine whether such late delivery Equipment is the minor part and has any effect to the performance of the Equipment or not.

The payment of such liquidated damages shall not relieve the Contractor of his obligations to complete the Work under the Contract.

In case any Equipment is defective or does not conform to the requirements or specifications of the Contract where replenishment or correction or replacement must be made by the Contractor as per Article E-29. Failure to Meet Requirements, it shall be deemed that such Equipment has not yet been delivered unless such Equipment has been replenished or corrected or replaced, as the case may be, and delivered to EGAT at the delivery point specified in the Contract.

Payment of liquidated damages is contingent exclusively upon late delivery; in no case shall EGAT be required to substantiate any claim for payment of liquidated damages with proof of loss and/or damages. The liquidated damages shall be calculated for each Day of delay until the Equipment is delivered to EGAT excluding a period of time from the actual delivery date at the delivery point set forth in the Contract until the issuance of notification of defect or short pack or out of specification made by EGAT to the Contractor. This sum is payable regardless of the actual loss and/or damages incurred.

The Contractor shall not be liable for liquidated damages in the event of delay caused by force majeure.

F-10. Maintenance Guarantee

a. The Contractor shall guarantee the proper functioning of the Equipment for a period as specified in Data Sheet from the day immediately following the date of acceptance of Equipment by EGAT; provided, however, that should any malfunctioning and/or latent defect in Equipment under normal use and service be found during the said period, and such malfunctioning and/or defective portion be repaired or replaced as stipulated in (c) and (d) hereinafter, then the guarantee period for such portion shall be extended from the day immediately following the date of completion of such repair or replacement as follows:

DRAFT

Time of Malfunctioning and/or Defect Found	Guarantee Period Extension				
	Equipment with 1-Year guarantee period	**Equipment with 2-Year guarantee period**	**Equipment with 3-Year guarantee period**	**Equipment with 4-Year guarantee period**	**Equipment with 5-Year guarantee period**
First Year	For a new period of one (1) Year.	For a new period of two (2) Years.	For a new period of three (3) Years.	For a new period of four (4) Years.	For a new period of five (5) Years.
Second Year	n/a	For a new period of one (1) Year.	For a new period of two (2) Years.	For a new period of three (3) Years.	For a new period of four (4) Years.
Third Year	n/a	n/a	For a new period of one (1) Year.	For a new period of two (2) Years.	For a new period of three (3) Years.
Fourth Year	n/a	n/a	n/a	For a new period of one (1) Year.	For a new period of two (2) Years.
Fifth Year	n/a	n/a	n/a	n/a	For a new period of one (1) Year.

The premium for the maintenance guarantee shall be paid by the Contractor.

b. On the expiration of the maintenance guarantee period and if the Equipment is functioning normally, the Contractor shall thereafter be released of all obligations and responsibilities under the Contract and the maintenance security deposited in accordance with Article F-7. Acceptance Certificate, will be released and returned to the Contractor.

c. If during the guarantee period EGAT finds any malfunctioning and/or defect in the Equipment, EGAT shall inform without delay the Contractor thereof, stating in writing the nature of the malfunctioning and/or defect, and the Contractor shall promptly commence to repair and make good or replace such malfunctioning and/or defect at the expense of the Contractor, except that the cost of import duty and taxes,

DRAFT

inland transportation and installation of the replacement parts for foreign supply Equipment, and the cost of inland transportation and the installation of the replacement parts for local supply Equipment will be borne by EGAT.

For Equipment specified in Data Sheet, in case EGAT, at its sole discretion, requires the Contractor to replace any defected Equipment, the Contractor shall replace the Equipment with the whole new set at its own costs and expenses including the cost of all re-export charges (if any), import duty and taxes, landing charges, rents and handling charges (ocean freight), storage charges (air freight), truck hire, labour charges, service charges for customs clearance, inland transportation and installation of the Equipment.

d. If, after the repair or replacement performed in accordance with this Article, such Equipment continues to show malfunctioning and/or defect, EGAT may, at its option, demand further repair or replacement, and reserve the right to claim damages, if applicable, arising therefrom.

e. If the Contractor fails to take action for starting up the necessary works for repair or replacement within fourteen (14) Days after receipt of EGAT's written notice of defect, the defect will be corrected by EGAT or any third party selected by EGAT at EGAT's discretion, and the cost of the corrections shall be on the responsibility and account of the Contractor.

In the event of an emergency where in the judgement of EGAT the delay resulting from giving formal notice would cause serious loss or damage which could be prevented by immediate action, defects may be corrected by EGAT or a third party chosen by EGAT without giving prior notice to the Contractor, and the cost of the corrections shall be paid by the Contractor. In the event such action is taken by EGAT, the Contractor will be notified promptly and shall assist wherever possible in making the necessary corrections.

F-11. Drawings and Documents to be Furnished by Contractor

EGAT reserves the right to require the Contractor to submit the drawings and documents listed in the tables attached at the end of this Section by the designated dates either by registered airmail for foreign mail and registered mail for local mail and/or by electronic files uploaded via document management system. However, cover letters shall be submitted in hard copy to EGAT.

After the requirement under this Article has been fulfilled by the Contractor, a Drawing and Document Acceptance Certificate will be issued by EGAT to certify the receipt of all required drawings and documents:

DRAFT

a. Drawings

(1) Drawing Title and Sizes. The title of Contractor's drawing shall also include the followings :

ELECTRICITY GENERATING AUTHORITY OF THAILAND

EGAT's Contract No._____

Item No._____

Subs. Name_____

The sizes of the drawings except otherwise specified in the Specification shall be as follows :

Size Designation	Dimensions in MM	Dimensions in Inches
A0	841 x 1,189	(33.11 x 46.81)
A1	594 x 841	(23.39 x 33.11)
A2	420 x 594	(16.54 x 23.39)
A3	297 x 420	(11.69 x 16.54)
A4	210 x 297	(8.27 x 11.69)

(2) Reference Drawings and Catalogues. General drawings showing principal dimensions and weights of Equipment, including controlling dimensions which affect space and handling requirements.

(3) Drawings and Data for Approval. The Contractor shall submit for approval checked detail assembly drawings including firm dimensions, foundation details and setting diagrams, physical size and weights of all principal parts, complete operating characteristics and ratings of Equipment, connection and schematic wiring diagrams, descriptive information and any other information sufficient to demonstrate fully that the Equipment to be furnished will conform to the requirements and intent of these Contract Documents.

Schematic diagrams shall indicate the operation and function of all electrical Equipment, accompanied, where necessary, with explanatory notes. Wiring diagrams shall show the external connection required, sufficient for EGAT to complete interconnection cable diagrams.

One print each of the drawings submitted for approval will be returned to the Contractor by EGAT or its authorized representative within thirty (30) Days after receipt at EGAT's office, marked either "Approved",

DRAFT

"Approved Except as Noted", or "Returned for Correction"/"Not Reviewed". The notations"Approved" or "Approved Except as Noted" will authorize the Contractor to proceed with the manufacture of the Equipment covered by such drawing, subject to the correction, if any, indicated thereon. When prints of drawings have been "Returned for Correction"/"Not Reviewed"., the Contractor shall make the necessary revisions on the drawings and shall within thirty (30) Days resubmit drawings for approval in the same manner as before.

Any manufacturing done before approval of the drawings will be at the Contractor's risk. EGAT shall have the right to require the Contractor to make any changes in the design which may be necessary, in the opinion of EGAT, to make the Equipment conform to the requirements and intent of these Contract Documents without additional cost to EGAT. Approval of the Contractor's drawings shall not be held to relieve the Contractor of any part of his obligation to meet all of the requirements of these Contract Documents or of the responsibility for the correctness of his drawings.

(4) Reproducibles of all final approved drawings shall be made on mylar films.

b. Report of Shop Test. The Contractor shall furnish certified copies of reports of all tests required of the manufacturer to show compliance with the applicable standards and specifications. The cost of all tests and reports shall be borne by the Contractor.

c. Instruction Manuals. The Contractor shall furnish complete set of instruction manuals and all final approved drawings (if any) for erection, operation, maintenance and repair of the Equipment, and for identification of parts. The instruction manuals shall be combined, assembled and bound in binders. Each binder cover shall be stamped with proper identification indicating name of Equipment, manufacturer's name and address, EGAT's Contract number, manufacturer's reference, etc.

Prior to the assembly and submittal of the instruction manuals, a proof of the cover lettering and the table of contents shall be submitted in sufficient time for EGAT's acceptance without delaying submittal of the finished manuals.

The CD-ROM (Compact Disc-Read Only Memory) of final drawings, final documents, test report and instruction manual, if required, shall conform to the applicable International Standard Organization 9660 (ISO 9660) and have capacity of approximately 700 Mbytes.

DRAFT

The data in CD-ROM shall be created by the following software :

Drawing

The Contractor shall submit all drawings created by CAD software as follows:

1. MICROSTATION software Version SE or
2. AUTOCAD software Version 2000

Any necessary information supporting the completion of reading files (such as special font etc.) shall be included in CD-ROM.

Documents

The Contractor shall submit all documents in Adobe Portable Document Format File (PDF format) and also Program of Acrobat Reader in order to read the file completely in CD-ROM.

Drawing/Document List

The Contractor shall submit the drawings/documents listing information in work sheets file provided by EGAT in CD-ROM in Microsoft Excel file format.

Drawing list of design drawings, as built drawings, manufacturing drawings shall also be submitted together with the drawings in the CD-ROM.

F-12. Maintenance Security

The Contractor shall provide to EGAT prior to the issuance of the acceptance certificate and as a condition for the release of the payment of the last instalment as specified in Article F-8. Payment, maintenance security(ies) in the amount of ten (10) per cent, round up to the nearest whole number, of the total Contract Price or ten (10) per cent, round up to the nearest whole number, of each schedule, excluding the cost of installation supervisor and cost of test(s), guaranteeing the Contractor's performance of the provision of Article F-10. Maintenance Guarantee. The Contractor shall oblige himself to attend to and replace, during the period of maintenance, all malfunctioning parts and for repair of all defects noted in the Work and communicated to the Contractor in writing by EGAT. In case of extended guarantee of the repaired or replaced Equipment, the Contractor may request for return of the original maintenance security and submit a new maintenance security in the amount of ten (10) per cent, round up to the nearest whole number, of the Contract Price of Equipment under the extended guarantee.

The maintenance security shall be in the form of a cash deposit, or a cashier cheque issued by a local bank, or a bank guarantee or letter of guarantee issued only by a local bank or an acceptable financial institution in Thailand, or by a foreign bank counter-guaranteed by a local bank, and made payable to EGAT in the same currency as that of

DRAFT

the Contract. In case of a cash deposit or a cashier cheque, only Thai baht portion of the Contract Price can be made. EGAT may at its absolute discretion refuse to approve any maintenance security offered or may at any time, upon application by the Contractor, approve of the substitution for any maintenance security held under this Article by other maintenance security on such terms and conditions as may be approved by EGAT.

The conditions of guarantor's obligations in the maintenance security shall include, inter alia; the following :

1. The guarantor shall unconditionally guarantee, as primary obligor and not as surety merely, payment of any obligations, damages, liquidated damages, performance penalties, or expenses for which the Contractor may become liable to EGAT.

2. No extension of time, change in, addition to, or other modification of the terms of the Contract or Work to be performed thereunder, or of the Specifications or other Contract Documents shall in anyway release the guarantor from any liability under the maintenance security, and the guarantor shall thereby waive notice of any such extension of time, change, addition or modification.

3. The maintenance security shall be valid and remain in full effect from the date of acceptance of Work until all obligations on the part of the Contractor under the Contract have been fulfilled.

Unless and until an official receipt is issued in respect to a maintenance security deposit, EGAT will not recognize or accept any such deposit as fulfilling the requirements of this Article. Failure to deposit a maintenance security at the time specified above in this Article or such extended time as may be approved by EGAT shall be a breach of this Contract and EGAT may, at its discretion, retain the payment of the last instalment of the total Contract Price.

If any maintenance security furnished under this Article shall become unacceptable to EGAT, or if any guarantor shall fail to furnish reports as to guarantor’s financial condition from time to time, as requested by EGAT, the Contractor shall promptly furnish such additional or alternative maintenance security as may be necessary to satisfy the Contract requirements for a maintenance security.

In the event of any default or breach of this Contract on the part of the Contractor, EGAT may convert into money any maintenance security which does not consist of money, and the proceeds shall be deemed to be a cash deposit under this Article. EGAT shall not be liable for any cost, expenses and/or loss resulting from the conversion of any maintenance security deposit into money as herein provided. The Contractor shall bear the cost of the maintenance security.

The maintenance security, in case of a bank guarantee, or letter of guarantee, shall be in conformity with the following specimen.

DRAFT

SPECIMEN OF MAINTENANCE GUARANTEE

To : Date :

Electricity Generating Authority of Thailand
Bangkruai, Nonthaburi 11130
Thailand

Re : Maintenance Security for Contract
No. EGAT_____

Gentlemen :

In accordance with the provision of the Contract for _____No. EGAT_____dated_____(hereinafter referred to as the Contract), the contents of which have been noted by us that Messrs._____(hereinafter referred to as the Contractor) has to deposit with Electricity Generating Authority of Thailand, (hereinafter referred to as EGAT) a Maintenance Security to guarantee the proper functioning of the_____ of the Contract as specified in Article F-10. Maintenance Guarantee in the amount of _____ (in words : _____) which is ten (10) per cent, round up to the nearest whole number, of the total Contract Price or ten (10) per cent, round up to the nearest whole number, of each schedule of the said Work, excluding the cost of installation supervisor and cost of test(s), we, the _____ as instructed by the Contractor, agree unconditionally to irrevocably guarantee as primary Obligor, the payment to EGAT at its first demand, without whatsoever right of objection on our part and without its first claim with the Contractor giving EGAT the right of claim for penalty, damages, liquidated damages or any expenses for which the Contractor may become liable to EGAT under the Contract.

We further agree that no extension of time, change in, addition to or other modification of terms of the Contract or work to be performed thereunder, or of the Specifications or other Contract Documents, which may be made between EGAT and the Contractor, shall in any way release us from any liability under the Maintenance Security, and we shall thereby waive notice of any such extension of time, change, addition or modification.

This Maintenance Security shall be valid and remain in full effect for a period of _____ (…) Year(s) from the day immediately following the date of the acceptance of Equipment. If necessary, this Maintenance Security shall be extended as specified in Article F-10. Maintenance Guarantee.

Yours very truly,

_____
Authorized Signature

DRAFT

Drawings and Documents to be Furnished by the Contractor
(For Control and Protection Equipment)

The Contractor shall submit by registered mail and/or by electronic files uploaded via document management system with the drawings and other documents listed below by the designated deadlines.

Should EGAT require the Contractor to submit the drawings and documents in electronic files via EGAT's document management system, the Contractor is also required to submit the drawings and documents in Print and CD-ROM at the number of copies listed in the parenthesis below.

Drawings/Documents	No. of copies		Deadline and Remarks
	P	CD-ROM	
Manufacturing and Delivery Schedule	1 (-)	- (-)	Within 60 Days after confirmation of Letter of Award of Contract
Quality Assurance Program (If requested by EGAT)	1 (-)	- (-)	Within 60 Days after confirmation of Letter of Award of Contract
Drawings or Documents "RELAY AND EQUIPMENT INSTRUCTION MANUAL"	1 (-)	- (-)	Within 90 Days after confirmation of Letter of Award of Contract
Drawings or Documents "FOR APPROVAL"	1 (1)	- (-)	Within 90 Days after confirmation of Letter of Award of Contract
Drawings or Documents "FOR REAPPROVAL"	1 (1)	- (-)	Within 30 Days after receipt of returned approval drawings for correction
Drawings "DRAFT-FINAL DRAWING"	1 (1)	- (-)	Within 30 Days for P and 60 Days for CD-ROM after receipt of returned approved drawings
Drawings and Documents "FINAL DRAWING or FINAL DOCUMENT"	1 (1)	1 (1)	Within 20 Days after Equipment delivery
Test Procedure (Factory Test)	1 (-)	- (-)	Within 90 Days after confirmation of Letter of Award of Contract
Test Schedule (Factory Test)	1 (-)	- (-)	Not less than 60 Days before testing for foreign supply Not less than 30 Days before testing for local supply
Test Report (Factory Test)	1 (-)	- (-)	Upon completion of tests
Instruction Manuals	- (-)	3(3)	30 Days before first shipment/delivery

Note : P = Print Drawing or Document
CD-ROM = Compact Disc-Read Only Memory with capacity of approximate 700 Mbytes conforming to ISO 9660

DRAFT

Drawings and Documents to be Furnished by the Contractor
(For All Equipment except Control and Protection Equipment)

The Contractor shall submit by registered mail and/or by electronic files uploaded via document management system with the drawings and other documents listed below by the designated deadlines.

Should EGAT require the Contractor to submit the drawings and documents in electronic files via EGAT's document management system, the Contractor is also required to submit the drawings and documents in Print and CD-ROM at the number of copies listed in the parenthesis below.

Drawings/Documents	No. of copies		Deadline and Remarks
	P	CD-ROM	
Manufacturing and Delivery Schedule	1 (-)	- (-)	Within 60 Days after confirmation of Letter of Award of Contract
Quality Assurance Program (If requested by EGAT)	1 (-)	- (-)	Within 60 Days after confirmation of Letter of Award of Contract
Drawings or Documents "FOR REFERENCE"	4 (2)	- (-)	Within 90 Days after confirmation of Letter of Award of Contract
Drawings or Documents "FOR APPROVAL"	4 (-)	- (-)	Within 60 Days for foundation, steel supporting structure (if any) and within 90 Days for others after confirmation of Letter of Award of Contract
Drawings or Documents "FOR REAPPROVAL"	4 (-)	- (-)	Within 30 Days after receipt of returned approval drawings for correction
Drawings and Documents "FINAL DRAWING or FINAL DOCUMENT"	4 (2) *4 (-)	- (-)	Within 30 Days after receipt of approved drawings
Final Design Data	4 (-)	- (-)	Within 150 Days after confirmation of Letter of Award of Contract
Test Procedure (Factory Test)	1 (-)	- (-)	Within 150 Days after confirmation of Letter of Award of Contract
Test Schedule (Factory Test)	1 (-)	- (-)	Not less than 60 Days before testing for foreign supply Not less than 30 Days before testing for local supply
Test Report (Factory Test)	1 (-)	- (-)	Upon completion of tests
Installation Instruction	9 (7)	5 (5)	60 Days before first shipment/delivery
Instruction Manuals	9 (7)	5 (5)	Before shipment/delivery

Note : P = Print Drawing or Document

CD-ROM = Compact Disc-Read Only Memory with capacity of approximate 700 Mbytes conforming to ISO 9660

*For Transmission Line Insulator, Hardware Assemblies and Line Accessories, Transmission Line Steel Tower, HTLS Transmission Line Conductor and Invar Transmission Line Conductor.

DRAFT

SECTION I

SPECIFICATIONS

DRAFT

I. SPECIFICATIONS

I-1. Specifications

The following specifications are attached hereto and made a part of the Contract Documents :

Specification No.	Description	Page
522 (Nov. 2025)	Conduit and Fittings	522.1 – 522.3
603 (Nov. 2025)	Grounding System Materials	603.1 – 603.6
605 (Nov. 2025)	Aluminum Tube, Bus Fittings, Compression Connector and Miscellaneous Hardware	605.1 – 605.12
611 (Nov. 2025)	Switchyard Lighting Fixtures	611.1 – 611.10

DRAFT

Specification No 522

Conduit and Fittings

522-1 **General.** This specification covers the general requirements for design, manufacture, test and supply of the conduit and fittings.

The specific ratings, characteristics and the special requirements and features of the equipment not covered herein are given in the accompanying Ratings and Features sheet (if any).

522-2 **Materials and Workmanship.** All materials shall be new and shall be the best available for the purposes used, considering strength, ductility, durability and suitability for the intended services and best engineering practice. Workmanship shall be of the highest grade and in accordance with the best modern standard practice.

522-3 **Service Conditions.** All materials shall be suitable for installation and use at an altitude of 1000 m or less in a tropical climate with a maximum ambient temperature of 45°C and 100% relative humidity for outdoor equipment (or a maximum ambient temperature of 40°C and 90% relative humidity for indoor equipment) without corrosion, deterioration or degradation of performance characteristics.

522-4 **Codes and Standards**. All equipment, materials, devices, fabrication and testing shall conform to the codes, specifications and standards listed below and all applicable codes, specifications and standard referred therein.

ANSI American National Standards Institute

ASTM American Society for Testing and Materials

AWS American Welding Society

All threaded parts requiring external connection shall have UNC screw and pipe threads. All internal parts may have threads in accordance with the established specification in the country of manufacturer.

It is the intent that all equipment, materials, devices, fabrication and testing shall conform to the application codes, specifications and standards even though they are not specifically noted herein. Equivalent codes, specifications and standards established and approved in the country of equipment or material manufacture may be used subject to EGAT's approval. If this election is made, the Bidder shall so state and include in his bid the governing codes, specifications, and standards proposed together with an itemized list of specific deviations from the requirements of codes, specifications and standards referred herein.

The latest issue of all codes, specifications and standards shall govern.

DRAFT
Bid No. IFTS-LPC-TEC-NPUP-MC-01

นายสมชัย เจริญศรีเกษม
ผู้ช่วยผู้อำนวยการฝ่ายวิศวกรรมระบบส่ง - 1
ทำการแทน ผู้อำนวยการฝ่ายวิศวกรรมระบบส่ง

เอกสารไม่ควบคุม
รับรองสำเนาโดย หฟอ-ร. กสส-ร. อวส.
ก่อนนำไปใช้งาน
ต้องตรวจสอบ ความถูกต้อง ล่าสุด
ฝ่ายวิศวกรรมระบบส่ง กฟผ.
13 กรกฎาคม 2569

The most stringent requirement, in the event of code, specification or standard conflict, shall govern. This specification shall govern in the event of discrepancies between it and applicable codes, specifications and standards.

522-5 **Design and Construction.** Electrical conduit and associated materials shall conform to the requirements of the following :

522-5.1 **Rigid Steel Conduit.** The rigid steel conduit shall be manufactured from steel tubing, produced in electrical resistance welding process with the weld bead on both inside and outside removed and hot-dipped galvanization in accordance with ANSI C80.1.

The rigid conduit shall be in standard length of 3.05 m (10 ft) including coupling, one coupling to be furnished with each length. Each length shall be reamed and threaded on each end.

All conduit fittings shall conform to ANSI/NEMA FB 1 Standards, in so far as they are applicable.

The finished conduit and fittings shall have smooth surfaces, free of lumps of excess zinc, inside bead or other injurious defects or such defects detrimental to smooth wire pulling.

The outside surface and threads on conduit shall have protective coating against corrosion. The threads on the fittings shall have paint, zinc or other protective coating against corrosion.

522-5.2 **High Density Polyethylene Conduit (HDPE).** The HDPE conduit shall be manufactured from high density polyethylene and shall be used with HDPE conduit fitting class PN6.

Each length of conduit shall be furnished with one standard couping. Joints shall be made with solvent cement. All additional conduit couplings, HDPE to steel conduit adapters, solvent cement and special fittings for the complete conduit system shall be included. Couplings shall have a center stop to ensure proper seating.

522-6 **Test.** Test of equipments shall be performed according to the requirements specified in each referred test item. The costs of all tests and reports shall be borne by the Contractor.

522-6.1 **Quality Conformance Test.** The quality conformance test shall be performed by selecting the sample from each lot of equipment. The numbers of samples for the test shall be as specified in the Standard.

522-6.2 **Test Report.** The report of all tests, curves and standard application data shall be furnished to EGAT immediately after completion of the tests.

DRAFT
Bid No. JET-BPLC-TUP-M-01-01
นายสมชัย เจริญศรีเกษม
ผู้ช่วยผู้อำนวยการฝ่ายวิศวกรรมระบบส่ง - 1
ทำการแทน ผู้อำนวยการฝ่ายวิศวกรรมระบบส่ง
เอกสารไม่ควบคุม
รับรองสำเนาโดย หหอ-ร. กสส-ร. อวส.
ก่อนนำไปใช้งาน
ต้องตรวจสอบ ฉบับล่าสุด
ฝ่ายวิศวกรรมระบบส่ง กฟผ.
13 กรกฎาคม 2569

522-6.3 **Test Procedure.** The Contractor shall submit the test procedure of specified tests and actual design tests to EGAT for approval. The test procedure shall consist of procedures, applied voltage, current and criteria to justify the result of the tests.

522-6.4 **Test Items for Rigid Steel Conduit.** The tests shall be performed in accordance with ANSI C80.1 .

a. Quality Conformance Tests

(a) General inspection.

(b) Dimension measurement.

(c) Galvanized inspection.

522-7 Drawings and Documents for Rigid Steel Conduit and Fittings

522-7.1 For Supply Project

A. Documents

Item	Description	Printed Documents	CD-ROM
	Rigid Steel Conduit		
1	Test procedure (Factory test)	x	-
2	Test schedule (Factory test)	x	-
3	Test report (Factory test)	x	-

522-7.2 For Supply and Construction Project

Drawings for Approval, Final Drawing, Documents and CD-ROM shall at least comprise the followings :

Item	Drawings Title
1	Outline drawings including dimension or catalog

DRAFT
Bid No. : IEPS-IPLC-TIEC-NPUP-MC1-01
เอกสารไม่ควบคุม
รับรองสำเนาโดย นายสมชัย เจริญศรีเกษม
ผู้ช่วยผู้อำนวยการฝ่ายวิศวกรรมระบบส่ง - 1
ก่อนนำไปใช้งาน
ต้องตรวจสอบ Revision ล่าสุด
ฝ่ายวิศวกรรมระบบส่ง กฟผ.
13 กรกฎาคม 2569

Specification No 603

Grounding System Materials

603-1 **General.** This Specification covers the general requirements for design, manufacture, test and supply of the grounding system materials.

The specific ratings, characteristics and the special requirements and features of the equipment not covered herein are given in the accompanying Ratings and Features sheet (if any).

603-2 **Materials and Workmanship.** All materials shall be new and shall be the best available for the purposes used, considering strength, ductility, durability and suitability for the intended services and best engineering practice. Workmanship shall be of the highest grade and in accordance with the best modern standard practice.

603-3 **Service Conditions.** All materials shall be suitable for installation and use at an altitude of 1000 m or less in a tropical climate with a maximum ambient temperature of 45°C and 100% relative humidity for outdoor equipment (or a maximum ambient temperature of 40°C and 90% relative humidity for indoor equipment) without corrosion, deterioration or degradation of performance characteristics.

603-4 **Codes and Standards.** All equipment, materials, devices, fabrication and testing shall conform to the codes, specifications and standards listed below and all applicable codes, specifications and standard referred therein.

ANSI American National Standards Institute

ASTM American Society for Testing and Materials

NEMA National Electrical Manufacturers Association

All threaded parts requiring external connection shall have UNC screw and pipe threads. All internal parts may have threads in accordance with the established specification in the country of manufacturer.

It is the intent that all equipment, materials, devices, fabrication and testing shall conform to the application codes, specifications and standards even though they are not specifically noted herein. Equivalent codes, specifications and standards established and approved in the country of equipment or material manufacture may be used subject to EGAT's approval. If this election is made, the Bidder shall so state and include in his bid the governing codes, specifications, and standards proposed together with an itemized list of specific deviations from the requirements of codes, specifications and standards referred herein.

The latest issue of all codes, specifications and standards shall govern.

DRAFT
Bid No. FTS-LPIC-TLC-NEW-MC1-01
เอกสารไม่ควบคุม
ผู้ควบคุมโดย หฟอ-ร. กสส-ร. อวส.
ก่อนนำไปใช้งาน
ต้องตรวจสอบ Revision ล่าสุด
ฝ่ายวิศวกรรมระบบส่ง กฟผ.
13 กรกฎาคม 2569
นายสมชัย เจริญศรีเกษม
ผู้ช่วยผู้อำนวยการฝ่ายวิศวกรรมระบบส่ง - 1
ทำการแทน ผู้อำนวยการฝ่ายวิศวกรรมระบบส่ง

The most stringent requirement, in the event of code, specification or standard conflict, shall govern. This specification shall govern in the event of discrepancies between it and applicable codes, specifications and standards.

603-5 Construction

603-5.1 Grounding Cables

a. Copper Conductor. Copper conductor shall be soft drawn concentric stranding bare copper conductor in accordance with the latest revision of ASTM B3, and manufactured in accordance with ASTM specification B8 (class B). The copper conductor shall be as the following requirements:

(a) Conductor

Nominal-sectional area	AWG	No 4/0	500 MCM
Construction of stranded conductor (number/dia in mm)		19/2.68	61/2.30
Calculated area	mm^2	107.2	253.5
Outside diameter	mm	13.4	20.7
Standard weight	kg/m	0.9719	2.298
Calculated resistance at 20ºC for DC	Ω/km	0.1641	0.06938

(b) Component of Conductor

Number		19	61
Diameter	mm	2.68	2.30
Tolerance diameter	mm	±0.0268	±0.023
Elongation in 250 mm, not less than	%	30	25
Conductivity at 20ºC, not less than	% IACS	100	100

603-5.2 **Ground Rods.** The ground rods shall be copper-covered steel of circular cross-section, 5/8 in (15.8 mm), 3/4 in (19.0 mm) in nominal diameter, and at least 10 ft (3.05 m) long. The steel core shall be cold-drawn steel conforming to ASTM A1080 and the copper coating shall conform to ASTM B572. Each ground rod shall have a conical swaged point at one end and shall have a continuous smooth copper covering of at least 0.010 in (0.254 mm) thickness copper-bonded (Electro-deposit) to a steel core. The copper-clad or pressed type shall not be accepted.

DRAFT
Bid No. IETS-LPLC-MEC-NPUP-MC-01
นายสมชัย เจริญศรีเกษม
ผู้ช่วยผู้อำนวยการฝ่ายวิศวกรรมระบบส่ง - 1
ทำการแทน ผู้อำนวยการฝ่ายวิศวกรรมระบบส่ง
เอกสารไม่ควบคุม
รับรองสำเนาโดย หพอ-ร. กสส-ร. อวส.
ก่อนนำไปใช้งาน
ต้องตรวจสอบ Revision ล่าสุด
ฝ่ายวิศวกรรมระบบส่ง กฟผ.
13 กรกฎาคม 2569

603-5.3 **Thermite Welding Materials.** The Contractor shall supply thermite welding materials for cable-to-cable, cable-to-ground rod and cable-to-steel structure connections.

The thermite welding materials shall include removable clamp type molds, handle flint gun, thermite powder cartridges, metal discs and other devices required to complete the connection.

The thermite powder cartridges shall be designed to provide an installed connection having a current capacity equal to the conductor being welded. The ignition powder shall be packed in the bottom of the cartridge to permit the ignition powder to fall on top of the welding powder when dumped into the mold. The powder cartridges shall be completed with metal discs.

The molds shall be designed to withstand the high temperature associated with the welding operation and shall provide a minimum of 50 acceptable connections without maintenance or replacement.

603-5.4 **Grounding Hardware**

a. **Grounding Connectors, Cable Clamps and Terminal Lugs.** Grounding connectors, cable clamps and terminal lugs shall be made of high strength corrosion resistance copper alloy. Machine screws, bolts, nuts, washers used with connectors and lugs shall be made of bronze or brass.

b. **Flexible Copper Braids.** All flexible copper braids shall be made of flat, extra-flexible copper braid which has been tinned before weaving. Both ends shall be encased in a seamless copper ferrule drilled in accordance with NEMA Standard. Ferrules shall be formed under high pressure insuring dependable contact.

603-6 **Packing.** All grounding cables shall be packed on reels.

The following information shall be displayed

(a) Name of manufacturer

(b) Size and number of conductors

(c) Year of manufacture

(d) Length of cables

(e) Reel number and other suitable identification for reel and reel size

(f) Net weight and Total weight

(g) Item No.

(h) Contract No.

Additionally, the information in (d), (e), (f), (g) and (h) shall be highlighted in contrasting colors for clearly visual inspection.

DRAFT
Bid No. IFT-B-TEC-NRSP-MCF-01

เอกสารไม่ควบคุม
รับรองสำเนาโดย หหอ-ร. กสส-ร. อวส.
ก่อนนำไปใช้งาน
ต้องตรวจสอบ Revision ล่าสุด
ฝ่ายวิศวกรรมระบบส่ง กฟผ.
นายสมชัย เจริญศรีเกษม
ผู้ช่วยผู้อำนวยการฝ่ายวิศวกรรมระบบส่ง - 1
ทำการแทน ผู้อำนวยการฝ่ายวิศวกรรมระบบส่ง
13 กรกฎาคม 2569

603-7 **Test.** Test of equipments shall be performed according to the requirements specified in each referred test item. The costs of all tests and reports shall be borne by the Contractor.

603-7.1 **Quality Conformance Test.** The quality conformance test shall be performed by selecting the sample from each lot of equipment. The numbers of samples for the test shall be as specified in the Standard.

603-7.2 **Test Report.** The report of all tests, curves and standard application data shall be furnished to EGAT immediately after completion of the tests.

603-7.3 **Test Procedure.** The Contractor shall submit the test procedure of specified tests and actual design tests to EGAT for approval. The test procedure shall consist of procedures, applied voltage, current and criteria to justify the result of the tests.

603-7.4 **Test Items for Grounding Cables.** The test shall be performed in accordance with ASTM B3 and ASTM B8.

a. Quality Conformance Tests

(a) Tensile strength test.

(b) Elongation test.

(c) Conductor resistivity test.

(d) Dimension measurement.

(e) Surface finish inspection.

(f) Weight of conductor.

DRAFT
Bid No. IETS-LPLC-TEC-NPUP-MG1-01

นายสมชัย เจริญศรีเกษม
ผู้ช่วยผู้อำนวยการฝ่ายวิศวกรรมระบบส่ง - 1
ทำการแทน ผู้อำนวยการฝ่ายวิศวกรรมระบบส่ง

เอกสารไม่ควบคุม
รับรองสำเนาโดย หพอ-ร. กสส-ร. อวส.
ก่อนนำไปใช้งาน
ต้องตรวจสอบ Revision ล่าสุด
ฝ่ายวิศวกรรมระบบส่ง กฟผ.
13 กรกฎาคม 2569

603-8 Drawings and Documents for Grounding System Materials

603-8.1 For Supply Project

Drawings and documents shall at least comprise the followings :

A. Documents

Item	Description	Printed Documents	CD-ROM
	Grounding Cables		
1	Manufacturing and delivery schedule	x	-
2	Test procedure (Factory test)	x	-
3	Test schedule (Factory test)	x	-
4	Test report (Factory test)	x	-
	Thermite Welding Materials		
1	Instruction manual	x	-

603-8.2 For Supply and Construction Project

Drawings for Approval, Final Drawing, Documents and CD-ROM shall at least comprise the followings :

Item	Drawings Title
1	Grounding Cables -Technical data
2	Ground Rods -Ground rod dimension -Technical Description
3	Thermite Welding Materials -Technical description
4	Grounding Hardware -Outline including dimension

DRAFT
Bid No. IFTS-PUBLIC-TIEC-NPUP-MC1-01
นายสมชัย เจริญศรีเกษม
ผู้ช่วยผู้อำนวยการฝ่ายวิศวกรรมระบบส่ง - 1
ทำการแทน ผู้อำนวยการฝ่ายวิศวกรรมระบบส่ง
เอกสารไม่ควบคุม
รับรองสำเนาโดย หพอ-ร. กสส-ร. อวส.
ก่อนนำไปใช้งาน
ต้องตรวจสอบ Revision ล่าสุด
ฝ่ายวิศวกรรมระบบส่ง กฟผ.
13 กรกฎาคม 2569

603-9 Instruction Manuals for Thermite Welding Materials

Instruction manuals shall consist of all necessary information and shall comprise at least the following parts.

Part A Installation

1. Preparation of cable

2. General welding procedure

Part B Complete set of all final drawings, technical data sheets or catalogs arranged in order of each complete item.

DRAFT
Bid No. IETS-LPLC-TEC-NPUP-MC1-01

นายสมชัย เจริญศรีเกษม
ผู้ช่วยผู้อำนวยการฝ่ายวิศวกรรมระบบส่ง - 1
ทำการแทน ผู้อำนวยการฝ่ายวิศวกรรมระบบส่ง

เอกสารไม่ควบคุม
รับรองสำเนาโดย หพอ-ร. กสส-ร. อวส.
ก่อนนำไปใช้งาน
ต้องตรวจสอบ Revision ล่าสุด
ฝ่ายวิศวกรรมระบบส่ง กฟผ.
13 กรกฎาคม 2569

Specification No 605

Aluminum Tube, Bus Fittings, Compression Connector and Miscellaneous Hardware

605-1 **General.** This specification covers the general requirements for design, manufacture, test and supply of the Aluminum Tube, Bus Fittings, Compression Connector and Miscellaneous Hardware

The specific ratings, characteristics and the special requirements and features of the equipment not covered herein are given in the accompanying Ratings and Features sheet (if any).

605-2 **Materials and Workmanship.** All materials shall be new and shall be the best available for the purposes used, considering strength, ductility, durability and suitability for the intended services and best engineering practice. Workmanship shall be of the highest grade and in accordance with the best modern standard practice.

605-3 **Service Conditions.** All materials shall be suitable for installation and use at an altitude of 1000 m or less in a tropical climate with a maximum ambient temperature of 45°C and 100% relative humidity for outdoor equipment (or a maximum ambient temperature of 40°C and 90% relative humidity for indoor equipment) without corrosion, deterioration or degradation of performance characteristics.

605-4 **Codes and Standards.** All equipment, materials, devices, fabrication and testing shall conform to the codes, specifications and standards listed below and all applicable codes, specifications and standard referred therein.

ANSI	American National Standards Institute
ASME	American Society of Mechanical Engineers
ASTM	American Society for Testing and Materials
AWS	American Welding Society
NEMA	National Electrical Manufacturers Association

All threaded parts requiring external connection shall have UNC screw and pipe threads. All internal parts may have threads in accordance with the established specification in the country of manufacturer.

It is the intent that all equipment, materials, devices, fabrication and testing shall conform to the application codes, specifications and standards even though they are not specifically noted herein. Equivalent codes, specifications and standards established and approved in the country of equipment or material manufacture may be used subject to EGAT's approval. If this election is made, the Bidder shall so state and include in his bid the governing codes, specifications, and standards proposed together

DRAFT
Bid No. IFTS-LPIC-TAC-NPUP-M-01
เอกสารไม่ควบคุม
รับรองสำเนาโดย หพอ-ร. กสส-ร. อวส.
ก่อนนำไปใช้งาน
ต้องตรวจสอบ Revision ล่าสุด
ฝ่ายวิศวกรรมระบบส่ง กฟผ.
นายสมชัย เจริญศรีเกษม
ผู้ช่วยผู้อำนวยการฝ่ายวิศวกรรมระบบส่ง - 1
ทำการแทน ผู้อำนวยการฝ่ายวิศวกรรมระบบส่ง

with an itemized list of specific deviations from the requirements of codes, specifications and standards referred herein.

The latest issue of all codes, specifications and standards shall govern.

The most stringent requirement, in the event of code, specification or standard conflict, shall govern. This specification shall govern in the event of discrepancies between it and applicable codes, specifications and standards.

605-5 Construction

605-5.1 **Aluminum Tube.** The aluminum tube shall be made of 6063-T6, UNI 3569-T6 or Alcan 50S-T6, first melting aluminum alloy to ANSI Standard Schedule 40 standard pipe size or Schedule 80 extra heavy pipe size. This extruded seamless tubing shall be manufactured in accordance with ASTM Specification No B241.

605-5.2 **Bus Fitting**

a. **Bus Supporting Clamps.** All bus support clamps shall be cast of first melting aluminum alloy 356-T6, A356-T6, AS7G-T6 or UNI 3599-T6. Each clamps shall be adjustable for alignment with the insulator and furnished with four galvanized steel mounting bolts and lockwashers of 1/2 in-13 UNC, for 3 in bolt circle, 5/8 in-11 UNC for 5 in bolt circle, and 3/4 in-10 UNC, for 7 in bolt circle.

Bus support clamp bolted type shall be furnished with first melting aluminum alloy 2024-T4 or 7075-T73 bolts, 6061-T6 or 7075-T73 nuts, and 7075-T6 or 7075-T73 split lockwashers and are finished with an anodic coating and lubricated, or shall be furnished with stainless steel, manufactured of 18-8 materials, bolts, nuts and split lockwashers.

Bus support clamp weld type non-expansion shall be suitable for use either as a welded fixed clamp or as an unwelded slip clamp.

Flexible elements of expansion bus support clamps shall be laminated aluminum strap or all aluminum conductor which has current capacity equivalent to the tube.

All bus support clamps shall have a smooth surface free from burrs and edges and fillet shall be rounded to minimize corona concentration and radio interference.

b. **Connectors.** All connectors for aluminum conductor shall be cast of first melting aluminum alloy 356-T6, A356-T6, AS7G-T6 or UNI 3599-T6.

Bolted type connectors shall be furnished with first melting aluminum alloy 2024-T4 or 7075-T73 bolts, 6061-T6 or 7075-T73 nuts, and 7075-T6 or 7075-T73 split lockwashers and are finished

DRAFT
Bid No. IFTS-JPC-TAC-SUP-MC-01
เอกสารไม่ควบคุม
รับรองสำเนาโดย หผอ-ร. กสส-ร. อวส.
ก่อนนำไปใช้งาน
ต้องตรวจสอบ ฉบับล่าสุด
ฝ่ายวิศวกรรมระบบส่ง กฟผ.
นายสมชัย เจริญศรีเกษม
ผู้ช่วยผู้อำนวยการฝ่ายวิศวกรรมระบบส่ง - 1
ทำการแทน ผู้อำนวยการฝ่ายวิศวกรรมระบบส่ง
13 กันยายน 2569

with an anodic coating and lubricated, or shall be furnished with stainless steel, manufactured of 18-8 materials, bolts, nuts and split lockwashers.

Welded type connectors shall be designed for fillet welds or champhered for butt welds.

All terminal pad drilling holes shall conform to NEMA-CC1. Contact surface of terminal pad shall be finished.

All connectors shall have a smooth surface free from burrs and edges and fillet shall be rounded to minimize corona concentration and radio interference.

(a) Angle and T Connectors. Tap element sockets of all angle and T connectors shall be deep enough to allow for error in cut-off.

(b) Couplers. All EHV couplers shall be of the internal fit, welded type to give maximum strength, streamlined appearance and minimum corona.

(c) Corona Bells. All corona or end bells shall be internal type. All EHV corona bells shall be the bolted type for ease in expansion, future reuse and to eliminate possibilities of nicks and scratches.

(d) Terminal Connectors. The bolted type terminal connectors shall be a multigrip type. All EHV terminal connectors shall be furnished with pad caps or shall be protected with corona rings or shields to prevent corona when bolting terminal connectors to flat pads.

Flexible element of expansion terminal connectors shall be laminated aluminum strap or all aluminum conductors which has current capacity equivalent to the tube.

605-5.3 Compression Connectors

a. Compression Dead End. The compression dead end shall be of tubular, compression type with non-adjustable clevis and made of first melting aluminum alloy 1100 or Alcan D1S. They shall be designed to grip both steel core and the aluminum strands and have ultimate strength of not less than 95% of ultimate strength of its conductor. Dead ends shall be equipped with galvanized steel clevis, bolts, nuts and stainless steel cotter pins with NEMA-CC1 tap pad.

b. Compression Terminal. The compression terminal shall be tubular and made of first melting aluminum alloy 1100 or Alcan D1S. The terminal shall have slip strength of not less than 30% of ultimate

DRAFT
Bid No. IFTS-LPIC-AEC-PUP-MCF-01
เอกสารไม่ควบคุม
รับรองสำเนาโดย หพอ-ร. กสส-ร. อวส.
ก่อนนำไปใช้งาน
ต้องตรวจสอบ ฉบับล่าสุด
นายสมชัย เจริญศรีเกษม
ผู้ช่วยผู้อำนวยการฝ่ายวิศวกรรมระบบส่ง - 1
ทำการแทน ผู้อำนวยการฝ่ายวิศวกรรมระบบส่ง
ฝ่ายวิศวกรรมระบบส่ง กฟผ.
13 กรกฎาคม 2569

strength of the conductor. All terminal pads drilling holes shall conform to NEMA-CC1.

The position of compression shall be clearly marked on the surface of each connectors. Contact surface of terminal pad shall be finished.

The cable barrel shall be factory filled with corrosion inhibiting sealant and sealed in clear plastic bags.

605-5.4 Miscellaneous Hardware

a. Suspension Clamps. The suspension clamps shall be suitable for aluminum conductor and shall have smooth surfaces free from burrs and edges and fillets shall be rounded to minimize corona concentration and radio interference. Clamp bodies and keeper pieces shall be cast of first melting in high strength heat-treated, silicon- aluminum alloy. Clevis pins, U bolts, nuts, and lockwashers shall be hot-dip galvanized steel. Cotter pins shall be stainless steel. Suspension clamp shall have ultimate strength of not less than 85% of rated ultimate strength of conductor.

b. Aluminum Strain Clamps. Aluminum strain clamps for aluminum conductor, clamp bodies and keeper pieces shall be cast of first melting in high strength, heat-treated, silicon-aluminum alloy. U-bolts, nuts, clevis pins and lockwashers shall be hot-dip galvanized steel. Cotter pins shall be stainless steel. Aluminum strain clamps shall have ultimate strength of not less than 95% of rated ultimate strength of conductor.

c. Strain Clamps. Strain clamps for galvanized steel wire, clamp bodies and keeper pieces shall be malleable iron or ductile iron, hot-dip galvanized. U-bolts, lockwashers and clevis pins shall be hot-dip galvanized steel. Cotter pins shall be stainless steel. Strain clamp shall have ultimate strength of not less than 85% of rated ultimate strength of conductor.

d. String Hardware. All string hardware shall be made of malleable iron, ductile iron or forged steel hot-dip galvanized. All metal shall be free from rust, burrs, sharp edges, lumps and dross and shall be smooth so that interconnecting parts will fit properly and the part may be assembled and disassembled easily. 230 kV and below string hardware shall have ultimate strength of not less than 8,200 kg. Minimum diameter of the bolts shall be 16 mm.

605-5.5 **Galvanizing.** All ferrous metal as described in this specification shall be galvanized by hot-dip process. The minimum quantity of zinc coating shall comply to the requirement of ASTM A153. Bolts and nuts shall be galvanized after being threaded and excessive zinc shall be removed, and the nuts shall run freely (by hand) over the entire length of the thread. The bolts and nuts shall not be retapped after galvanizing.

DRAFT
Bid No. IFTS-PLC-ACCIRUP-W/01
เอกสารไม่ควบคุม
รับรองสำเนาโดย หพอ-ร. กสฟ-ฟ. ฟวล.
ก่อนนำไปใช้งาน
ต้องตรวจสอบ ฉบับแก้ไขล่าสุด
นายสมชัย เจริญศรีเกษม
ผู้ช่วยผู้อำนวยการฝ่ายวิศวกรรมระบบส่ง - 1
ทำการแทน ผู้อำนวยการฝ่ายวิศวกรรมระบบส่ง
ฝ่ายวิศวกรรมระบบส่ง กฟผ.
13 กรกฎาคม 2569

Finished materials shall be dipped into the solution of dichromate after galvanizing for white rust protection.

605-6 **Test.** Test of equipments shall be performed according to the requirements specified in each referred test item. The costs of all tests and reports shall be borne by the Contractor.

605-6.1 **Design Test.** The proposed equipment shall already have the design test record of the same type and same rating as EGAT called for, in accordance with the tests specified in each equipment test items, which is subject to EGAT's approval (unless otherwise specified in each equipment test item). The design test record shall be required and submitted together with the tender document during the bidding.

605-6.2 **Quality Conformance Test.** The quality conformance test shall be performed by selecting the sample from each lot of equipment. The numbers of samples for the test shall be as specified in the Standard.

605-6.3 **Test Report.** The report of all tests, curves and standard application data shall be furnished to EGAT immediately after completion of the tests.

605-6.4 **Test Procedure.** The Contractor shall submit the test procedure of specified tests and actual design tests to EGAT for approval. The test procedure shall consist of procedures, applied voltage, current and criteria to justify the result of the tests.

605-6.5 **Test Items for Aluminum Tube.** The tests shall be performed in accordance with ASTM B241.

a. **Quality Conformance Tests.** The number of sample required for the test shall be three (3) samples for each size.

(a) General inspection.

(b) Dimension and weight measurements.

(c) Tensile strength and elongation test.

(d) Chemical composition or certified report of aluminum alloy from the original manufacturer.

605-6.6 **Test Items for Bus Fittings.** The tests shall be performed in accordance with NEMA CC1.

a. **Design Tests.** These tests may be omitted if a design test record can be submitted.

(a) Temperature rise test.

(b) Cantilever strength test of bus supports.

DRAFT
Bid No. IFT 5-2PIC-ACCN-PUP-MC-01
เอกสารไม่ควบคุม
รับรองสำเนาโดย หพอ-ร. กสส-ร. อวส.
ก่อนนำไปใช้งาน
ต้องตรวจสอบ Revision ล่าสุด
ฝ่ายวิศวกรรมระบบส่ง กฟผ.
13 กรกฎาคม 2569
นายสมชัย เจริญศรีเกษม
ผู้ช่วยผู้อำนวยการฝ่ายวิศวกรรมระบบส่ง - 1
ทำการแทน ผู้อำนวยการฝ่ายวิศวกรรมระบบส่ง

(c) Pull-out strength test.

(d) Corona and RIV test.

(e) Tensile test and bending test of welded couplers.

b. Quality Conformance Tests. Number of samples required, for each type of bus fittings, for the tests shall be all for 1-3 sets, 3 samples for 4-30 sets and 10% for over 30 sets.

(a) General inspection.

(b) Dimension measurement.

(c) Chemical composition or certified report of aluminum alloy from the original manufacturer.

605-6.7 **Test Items for Compression Connectors.** The tests shall be performed in accordance with NEMA CC1 and the manufacture standard.

a. Design Tests. These tests may be omitted if a design test record can be submitted.

(a) Temperature rise test.

(b) Tensile strength test.

(c) Corona and RIV test (For 500 kV connectors only).

b. Quality Conformance Tests. Number of samples required, for each type of compression connector, for the tests shall be all for 1-3 sets, 3 samples for 4-30 sets and 10% for over 30 sets.

(a) General inspection.

(b) Dimension measurement.

(c) Tension test. (No of samples, 1 for over 100 sets) The tensile load, which shall be equal to 50 % of the specified minimum ultimate strength unless otherwise specified, shall be applied to the fitting and maintained for 30 seconds. The fitting shall not be damaged by the test.

(d) Galvanizing test.

(e) Chemical composition or certified report of aluminum alloy from the original manufacturer.

DRAFT
Bid No. IET-EPC-TEC-NPUP-MC1-01
เอกสารไม่ควบคุม
รับรองสำเนาโดย หฟอ-ร. กสส-ร. อวส.
ก่อนนำไปใช้งาน
ต้องตรวจสอบ Revision ล่าสุด
ฝ่ายวิศวกรรมระบบส่ง กฟผ.
นายสมชัย เจริญศรีเกษม
ผู้ช่วยผู้อำนวยการฝ่ายวิศวกรรมระบบส่ง - 1
ทำการแทน ผู้อำนวยการฝ่ายวิศวกรรมระบบส่ง
วันที่ 1 กันยายน 2569

605-6.8 **Test Items for Miscellaneous Hardware.** The tests shall be performed in accordance with the manufacture standard and ASTM A153.

a. **Design Tests.** These tests may be omitted if a design test record can be submitted.

(a) Corona and RIV test (For 500 kV miscellaneous hardware only).

b. **Quality Conformance Tests.** Number of samples required, for each type of miscellaneous hardware, for the tests shall be all for 1-3 sets, 3 samples for 4-30 sets and 10% for over 30 sets.

(a) General inspection.

(b) Dimension measurement.

(c) Tension test. (No of samples, 1 for 10-50 sets, 2 for over 50 sets)

(d) Galvanizing test.

DRAFT
Bid No. IETS-LPLC-TEC-NPUP-MC1-01

นายสมชัย เจริญศรีเกษม
ผู้ช่วยผู้อำนวยการฝ่ายวิศวกรรมระบบส่ง - 1
ทำการแทน ผู้อำนวยการฝ่ายวิศวกรรมระบบส่ง

เอกสารไม่ควบคุม
รับรองสำเนาโดย หพอ-ร. กสส-ร. อวส.
ก่อนนำไปใช้งาน
ต้องตรวจสอบ Revision ล่าสุด
ฝ่ายวิศวกรรมระบบส่ง กฟผ.
13 กรกฎาคม 2569

605-7 Drawings and Documents for Aluminum Tube, Bus Fitting, Compression Connector and Miscellaneous Hardware

605-7.1 For Supply Project

Drawings and documents shall at least comprise the followings :

A. Drawings

Item	Description	Approval and Final Dwgs	Reproducible Dwgs
	Bus Fitting, Compression Connector and Miscellaneous Hardware		
1	Outline drawings including dimension and technical data	x	-

B. Documents

Item	Description	Printed Documents	CD-ROM
	Aluminum Tube, Bus Fitting, Compression Connector and Miscellaneous Hardware		
1	Test procedure (Factory test)	x	-
2	Test schedule (Factory test)	x	-
3	Test report (Factory test)	x	-
4	Instruction manual (For bus fitting only)	x	-

605-7.2 For Supply and Construction Project

Drawings for Approval, Final Drawing, Documents and CD-ROM shall at least comprise the followings :

Item	Drawings Title
1	Outline drawings including dimension

เอกสารไม่ควบคุม
รับรองสำเนาโดย หพอ-ร. กสส-ร. อวส.
ก่อนนำไปใช้งาน
ต้องตรวจสอบ Revision ล่าสุด
ฝ่ายวิศวกรรมระบบส่ง กฟผ.
13 กรกฎาคม 2569

605-8 Instruction Manuals for Bus Fittings

Instruction manuals shall consist of all necessary information and shall comprise at least the following parts.

นายสมชัย เจริญศรีเกษม
ผู้ช่วยผู้อำนวยการฝ่ายวิศวกรรมระบบส่ง - 1
ทำการแทน ผู้อำนวยการฝ่ายวิศวกรรมระบบส่ง

DRAFT
Bid No. IFB-PLC-ALEC-NPUP-MC1-01

Part A Installation

1. For bolted type

2. For welded type

Part B Complete set of all final drawings arranged in order of each complete item.

นายสมชัย เจริญศรีเกษม
ผู้ช่วยผู้อำนวยการฝ่ายวิศวกรรมระบบส่ง - 1
ทำการแทน ผู้อำนวยการฝ่ายวิศวกรรมระบบส่ง

DRAFT
Bid No. IETS-LPLC-TIEC-NPUP-MC1-01

เอกสารไม่ควบคุม
รับรองสำเนาโดย หพอ-ร. กสส-ร. อวส.
ก่อนนำไปใช้งาน
ต้องตรวจสอบ Revision ล่าสุด
ฝ่ายวิศวกรรมระบบส่ง กฟผ.
13 กรกฎาคม 2569

Table 1

Characteristics of All Aluminum Conductors (AAC)

Description		4/0 AWG	336.4 MCM	477 MCM	477 MCM	795 MCM	1272MCM
Code name		OXLIP	TULIP	COSMOS	SYRINGA	ARBUTUS	NARCISSUS
Ultimate strength	kg	1,740	2,785	3,782	3,930	6,300	9,979
Outside diameter	mm	13.26	16.92	20.13	20.16	26.04	33.02
Aluminum strand (before stranding) :							
Number		7	19	19	37	37	61
Diameter	mm	4.42	3.38	4.02	2.88	3.72	3.67
Elongation in 254 mm, average, not less than	%	2.0	1.8	2.0	1.7	1.9	1.9
Ultimate tensile strength, average, not less than	kg/mm^2	16.87	17.58	16.87	17.93	17.23	17.23

DRAFT
Bid No. IETS-LPLC-MEC-NPLP-1001-01

นายสมชัย เจริญศรีเกษม
ผู้ช่วยผู้อำนวยการฝ่ายวิศวกรรมระบบส่ง - 1
ทำการแทน ผู้อำนวยการฝ่ายวิศวกรรมระบบส่ง

เอกสารไม่ควบคุม
รับรองสำเนาโดย หพอ-ร. กสส-ร. อวส.
ก่อนนำไปใช้งาน
ต้องตรวจสอบ Revision ล่าสุด
ฝ่ายวิศวกรรมระบบส่ง กฟผ.
13 กรกฎาคม 2569

Table 2

Characteristics of Aluminum Conductors Steel Reinforced (ACSR/GA)

Description		4/0 AWG	266.8 MCM	336.4MCM	477 MCM	477 MCM	795 MCM	954 MCM	1272 MCM
Code name		PENQUIN	PARTRIDGE	LINNET	HAWK	HEN	CONDOR	CARDINAL	-
Ultimate strength	kg	3,790	5,120	6,400	8,860	10,800	12,800	15,200	14,050
Outside diameter	mm	14.30	16.28	18.31	21.81	22.40	27.73	30.38	33.91
Aluminum strand (before stranding):									
Number		6	26	26	26	30	54	54	42
Diameter	mm	4.77	2.57	2.89	3.44	3.20	3.08	3.375	4.42
Elongation in 254 mm, average, not less than	%	2.1	1.6	1.7	1.8	1.8	1.8	1.8	2.0
Ultimate tensile strength, average, not less than	kg/mm^2	16.87	18.28	17.93	17.58	17.58	17.58	17.58	16.87
Galvanized steel strand (before stranding) :									
Number		1	7	7	7	7	7	7	7
Diameter	mm	4.77	2.00	2.245	2.675	3.20	3.08	3.375	2.46
Elongation in 254 mm, not less than	%	4.0	3.0	3.0	3.5	4.0	4.0	4.0	3.5
Stress at 1 percent extension, not less than	kg/mm^2	120	134	134	130	127	127	127	130
Ultimate tensile strength, not less than	kg/mm^2	141	148	148	144	144	144	144	144

DRAFT
Bid No. IFTS-LPLC-TIEC-NPLC-MGT-01

เอกสารไม่ควบคุม
รับรองสำเนาโดย หหอ-ร. กสส-ร. อวส.
ก่อนนำไปใช้งาน
ต้องตรวจสอบ Revision ล่าสุด
ฝ่ายวิศวกรรมระบบส่ง กฟผ.
13 กรกฎาคม 2569

นายสมชัย เจริญศรีเกษม
ผู้ช่วยผู้อำนวยการฝ่ายวิศวกรรมระบบส่ง - 1
ทำการแทน ผู้อำนวยการฝ่ายวิศวกรรมระบบส่ง

Table 3

Characteristics of Galvanized Steel Stranded Overhead Ground Wire

Description		5/16"		3/8"		7/16"	
		High strength	**Extra high strength**	**High strength**	**Extra high strength**	**High strength**	**Extra high strength**
Ultimate strength	kg	3,628	5,080	4,900	6,985	6,577	9,434
Outside diameter	mm	7.925	7.925	9.144	9.144	11.049	11.049
Galvanized steel strand :							
Number of wire		7	7	7	7	7	7
Nominal diameter of coated wire	mm	2.642	2.642	3.048	3.048	3.683	3.683
Modulus of elasticity	kg/mm^2	19,300	19,300	19,300	19,300	19,300	19,300
Coefficient of linear expansion	%	11.5	11.5	11.5	11.5	11.5	11.5
Elongation in 610 mm, not less than	%	5	4	5	4	5	4

นายสมชัย เจริญศรีเกษม
ผู้ช่วยผู้อำนวยการฝ่ายวิศวกรรมระบบส่ง - 1
ทำการแทน ผู้อำนวยการฝ่ายวิศวกรรมระบบส่ง

DRAFT
Bid No. IETS-LPLC-AC-NPLHMC1-01

เอกสารไม่ควบคุม
รับรองสำเนาโดย หพอ-ร. กสส-ร. อวส.
ก่อนนำไปใช้งาน
ต้องตรวจสอบ Revision ล่าสุด
ฝ่ายวิศวกรรมระบบส่ง กฟผ.
13 กรกฎาคม 2569

Specification No 611

Switchyard Lighting Fixtures

611-1 **General.** This specification covers the general requirements for design, manufacture, test and supply of the switchyard lighting fixtures.

The specific ratings, characteristics and the special requirements and features of the equipment not covered herein are given in the accompanying Ratings and Features sheet (if any).

611-2 **Materials and Workmanship.** All materials shall be new and shall be the best available for the purposes used, considering strength, ductility, durability and suitability for the intended services and best engineering practice. Workmanship shall be of the highest grade and in accordance with the best modern standard practice.

611-3 **Service Conditions.** All materials shall be suitable for installation and use at an altitude of 1000 m or less in a tropical climate with a maximum ambient temperature of 45°C and 100% relative humidity for outdoor equipment (or a maximum ambient temperature of 40°C and 90% relative humidity for indoor equipment) without corrosion, deterioration or degradation of performance characteristics.

611-4 **Codes and Standards.** All equipment, materials, devices, fabrication and testing shall conform to the codes, specifications and standards listed below and all applicable codes, specifications and standard referred therein.

ANSI	American National Standards Institute
IEC	International Electrotechnical Commission
IEEE	The Institute of Electrical and Electronics Engineers
ICEA	Insulated Cable Engineer Association
NEMA	National Electrical Manufacturers Association

All threaded parts requiring external connection shall have UNC screw and pipe threads. All internal parts may have threads in accordance with the established specification in the country of manufacturer.

It is the intent that all equipment, materials, devices, fabrication and testing shall conform to the application codes, specifications and standards even though they are not specifically noted herein. Equivalent codes, specifications and standards established and approved in the country of equipment or material manufacture may be used subject to EGAT's approval. If this election is made, the Bidder shall so state and include in his bid the governing codes, specifications, and standards proposed together

DRAFT
Bid No. IFB-LPC-MEC-MUP-MCT-01
เอกสารควบคุม
รับรองสำเนาโดย หหอ-ร. กสส-ร. อวส.
ก่อนนำไปใช้งาน
ต้องตรวจสอบ Revision ล่าสุด
ฝ่ายวิศวกรรมระบบส่ง กฟผ.
นายสมชัย เจริญศรีเกษม
ผู้ช่วยผู้อำนวยการฝ่ายวิศวกรรมระบบส่ง - 1
ทำการแทน ผู้อำนวยการฝ่ายวิศวกรรมระบบส่ง
ตั้งแต่ 1 มิถุนายน 2569

with an itemized list of specific deviations from the requirements of codes, specifications and standards referred herein.

The latest issue of all codes, specifications and standards shall govern.

The most stringent requirement, in the event of code, specification or standard conflict, shall govern. This specification shall govern in the event of discrepancies between it and applicable codes, specifications and standards.

611-5 **Construction of High Intensity Discharge lamp.** The lighting fixtures shall be as shown on attached drawings.

611-5.1 **Flood Lighting Fixture**

a. **Fixture.** The fixture shall be provided for outdoor wide-beam floodlight with build-in controlgear (ballast, capacitor, ignitor etc.). The housing shall be corrosion resistant aluminum alloy and the reflector shall be anodized high purity aluminum. The front glass shall be thermal shock resistant safety glass with the silicone rubber gasket. All metal parts shall be made of non-corrosive material. The fixture shall be jetproof, dustproof and shall conform to IP55, DIN, VDE, IEC class1.

b. **Lamp.** The lamp shall be one from the following:

- High pressure mercury-vapor 400 W, 230 V; 20,000 lm with 16,000 h service life.

- High pressure sodium 400 W, 230 V; 47,000 lm or 250 W, 230 V; 25,000 lm with 16,000 h service life

c. **Ballast.** The ballast shall be suitable for use with 400 W or 250 W lamp, 230 V, 50 Hz and shall have a 90% power factor, 45 dB sound level. The ballast shall be electrical designed to ensure very low operating temperature and low wattage loss.

611-5.2 **Street and Area Lighting Fixture**

a. **Fixture.** The fixture shall be provided for outdoor use with built-in controlgear (ballast, capacitor, ignitor, etc.) and shall be post-top mounted bottom support with 76 mm fixing diameter. The canopy and base shall be corrosion resistant aluminum alloy. The diffuser shall be made of UV-stabilized clear poly-carbonate or heat shock resistant clear glass. All metal parts shall be made of non-corrosive material. The fixture shall be weatherproof, dust-protected and shall conform to IP54, DIN, VDE, IEC class 1.

b. **Lamp.** The lamp shall be one from the following:

DRAFT
Bid No. IETS-LPLC-AEC-NPP-MCI-01
นายสมชัย เจริญศรีเกษม
ผู้ช่วยผู้อำนวยการฝ่ายวิศวกรรมระบบส่ง - 1
ทำการแทน ผู้อำนวยการฝ่ายวิศวกรรมระบบส่ง
เอกสารไม่ควบคุม
รับรองสำเนาโดย หพอ-ร. กสส-ร. อวส.
ก่อนนำไปใช้งาน
ต้องตรวจสอบ Revision ล่าสุด
ฝ่ายวิศวกรรมระบบส่ง กฟผ.
13 กรกฎาคม 2569

- High pressure mercury-vapor 250 W, 230 V; 11,000 lm with 16,000 h service life.

- High pressure sodium 250 W, 230 V; 25,000 lm or 150 W, 230 V; 14,000 lm with 16,000 h service life.

c. **Ballast.** The ballast shall be suitable for use with 250 W or 150 W lamp, 230 V, 50 Hz and shall have a 90% power factor, 45 dB sound level. The ballast shall be electrical designed to ensure very low operating temperature and low wattage loss.

611-6 **Requirement and Construction of LED lamp.** The LED luminaire should be design for 70% lumen maintenance at the end of life (L70) at ambient temperature and should have a useful life of 50,000 operating hours. The luminaire should be fully compatible with future LED upgrades when they become available and should have a modular design to upgrade / replace with new LED modules or LED drivers at sites conveniently with minimum effort. The luminaire shall have a built-in surge protection system to protect the electronic driver and LED system. The luminaire shall have a minimum surge protection rating is 6 kV. The luminaire system efficacy shall not be less than 90 lm/W. Fully assembled luminaires shall be electrically tested before shipment from factory.

611-6.1 **Flood Lighting Fixture**

a. **Fixture.** The housing shall be corrosion resistant die cast aluminum alloy and have adequate surface area to ensure fast heat dissipation and suitable for the ambient temperature. No additional cooling or ventilation apart from the cooling fins provided on the luminaire housing. The protective front cover shall be made of clear poly-carbonate or heat shock resistance glass. The luminaire without protective glass cover is not acceptable. High quality silicone gasket. No chemical glue is used. The mounting bracket shall be drilled 18 mm hole at the middle. All metal parts shall be made of non-corrosive material. The fixture shall be provided for dust-tight, jetproof and shall conform to IP65, DIN, VDE, IEC class 1. Luminaire components exposed to the environment shall be painted or anodized finish.

b. **LED.** The LED chip should be from reliable manufacturers such as CREE, Philips Lumileds, Osram, Nichia. The LED shall have a minimum color rendering index (CRI) of 70 and a minimum correlated color temperature (CCT) of 5,000K. At driving current and operating temperature in luminaire, the LED shall have useful life of not less than 50,000 hours with 70% lumen maintenance. The power consumption shall not be more than 110 W or 180 W. Each individual LED source should be provided with symmetric distribution lens to ensure adequate luminance and illuminance uniformity in the unlikely event of individual LED failure.

DRAFT
Bid No. JETS-LEC-TEC-NPUP-MOD-01
เอกสารไม่ควบคุม
รับรองสำเนาโดย หหอ-ร. กสส-ร. อวส.
ก่อนนำไปใช้งาน
ต้องตรวจสอบ Revision ล่าสุด
ฝ่ายวิศวกรรมระบบส่ง กฟผ.
นายสมชัย เจริญศรีเกษม
ผู้ช่วยผู้อำนวยการฝ่ายวิศวกรรมระบบส่ง - 1
ทำการแทน ผู้อำนวยการฝ่ายวิศวกรรมระบบส่ง
13 กรกฎาคม 2569

c. **Driver.** The LED driver shall be designed to operate array of high power LEDs through current controlled output. The driver shall be suitable for nominal 220 – 240 Volts, 50 Hz mains supply voltage. The case temperature (Tc) shall be able to resist temperature up to 70°C. The driver shall have lifetime of not less than 50,000 operating hours at Tc of 70°C and shall have a minimum power factor (pF) of 0.90 at full input power and across specified voltage range.

611-6.2 Street Lighting Fixture

a. **Fixture.** The housing shall be corrosion resistant die cast aluminum alloy and have adequate surface area to ensure fast heat dissipation and suitable for the ambient temperature. No additional cooling or ventilation apart from the cooling fins provided on the luminaire housing. The protective front cover shall be made of clear poly-carbonate or heat shock resistance glass. High quality silicone gasket. No chemical glue is used. All metal parts shall be made of non-corrosive material. The fixture shall be provided for dust-tight, jetproof and shall conform to IP65, DIN, VDE, IEC class 1. Luminaire components exposed to the environment shall be painted or anodized finish.

b. **LED.** The LED chip should be from reliable manufacturers such as CREE, Philips Lumileds, Osram, Nichia. The LED shall have a minimum color rendering index (CRI) of 70 and a minimum correlatated color temperature (CCT) of 5,000K. At driving current and operating temperature in luminaire, the LED shall have useful life of not less than 50,000 hours with 70% lumen maintenance. The power consumption shall not be more than 70 W. Each individual LED source should be provided with symmetric distribution lens to ensure adequate luminance and illuminance uniformity in the unlikely event of individual LED failure.

c. **Drivers.** The LED driver shall be designed to operate array of high power LEDs through current controlled output. The driver shall be suitable for nominal 220 – 240 Volts, 50 Hz mains supply voltage. The case temperature (Tc) shall be able to resist temperature up to 70°C. The driver shall have lifetime of not less than 50,000 operating hours at Tc of 70°C and shall have a minimum power factor (pF) of 0.90 at full input power and across specified voltage range.

DRAFT
Bid No. IFTS-IPC-TEC-MRO-MT-01

เอกสารไม่ควบคุม
รับรองสำเนาโดย หพอ-ร. กสส-ร. อวส.
ก่อนนำไปใช้งาน
ต้องตรวจสอบ Revision ล่าสุด
ฝ่ายวิศวกรรมระบบส่ง กฟผ.
13 กรกฎาคม 2569
นายสมชัย เจริญศรีเกษม
ผู้ช่วยผู้อำนวยการฝ่ายวิศวกรรมระบบส่ง - 1
ทำการแทน ผู้อำนวยการฝ่ายวิศวกรรมระบบส่ง

611-7 **Requirement and Construction of Solar Lighting Fixture for Fence and Access Road.** The operation system shall be Off-Grid. Lighting fixture, battery, charger and solar panel shall be within single component (All in one). Each of lighting module, battery, charger and solar panel shall be designed as individually replaceable components. The luminaire shall have a built-in surge protection system to protect the electronic driver and LED system.

a. **Fixture.** The housing shall be corrosion resistant die cast aluminum alloy and have adequate surface area to ensure fast heat dissipation and suitable for the ambient temperature. No additional cooling or ventilation apart from the cooling fins provided on the luminaire housing. The protective front cover shall be made of clear poly-carbonate or heat shock resistance glass. High quality silicone gasket. No chemical glue is used. The fixture shall be provided the resistance of enclosures of the intrusion of dust and liquids at least IP65. Luminaire components exposed to the environment shall be painted or anodized finish.

b. **LED.** The LED luminaire should be design for 70% lumen maintenance at the end of life (L70) at maximum ambient temperature and should have a useful life of 50,000 operating hours.

c. **Charger.** The charger type shall be Maximum Power Point Tracking (MPPT).

d. **Solar panel.** The solar panel shall be monocrystalline.

e. **Battery.** The battery type shall be LiFePO4. Battery compartment can be removable for easy maintenance.

611-8 **Test.** Test of equipments shall be performed according to the requirements specified in each referred test item. The costs of all tests and reports shall be borne by the Contractor.

611-8.1 **Design Test.** The proposed equipment shall already have the design test record of the same type and same rating as EGAT called for, in accordance with the tests specified in each equipment test items, which is subject to EGAT′s approval (unless otherwise specified in each equipment test item). The design test record shall be required and submitted together with the tender document during the bidding.

611-8.2 **Quality Conformance Test.** The quality conformance test shall be performed by selecting the sample from each lot of equipment. The numbers of samples for the test shall be as specified in the Standard.

611-8.3 **Test Report.** The report of all tests, curves and standard application data shall be furnished to EGAT immediately after completion of the tests.

DRAFT
Bid NO. JET-B-LPC-MEC-NFUP-MM-01

เอกสารไม่ควบคุม
รับรองสำเนาโดย หหอ-ร. กสส-ร. อวส.
ก่อนนำไปใช้งาน
ต้องตรวจสอบ Revision ล่าสุด
ฝ่ายวิศวกรรมระบบส่ง กฟผ.
นายสมชัย เจริญศรีเกษม
ผู้ช่วยผู้อำนวยการฝ่ายวิศวกรรมระบบส่ง - 1
ทำการแทน ผู้อำนวยการฝ่ายวิศวกรรมระบบส่ง
13 กรกฎาคม 2569

611-8.4 **Test Procedure.** The Contractor shall submit the test procedure of specified tests and actual design tests to EGAT for approval. The test procedure shall consist of procedures, applied voltage, current and criteria to justify the result of the tests.

611-8.5 **Test Items for Switchyard Lighting Fixtures.** The tests shall be performed in accordance with the manufacturer's standard.

a. Flood, Street and Area Lighting Fixture (High Intensity Discharge Lamp)

(a) **Design Tests.** These tests may be omitted if a design test record can be submitted.

1. Photometric test
2. Degree of protection test. The tests shall be performed in accordance with IEC 60529.

(b) **Quality Conformance Tests.** The tests shall be performed in accordance with the manufacturer's standard.

1. General Inspection
2. Dimension measurement

b. Flood and Street Lighting Fixture (LED Lamp)

(a) **Design Tests.** These tests may be omitted if a design test record can be submitted.

1. Degree of protection test against solid foreign objects and splashing water. The tests shall be performed in accordance with latest IEC 60529.
2. Electrical and photometric measurements of solid state lighting product. The tests shall be performed in accordance with IES LM-79-08 (or latest).
3. Measuring lumen maintenance of LED light sources. The tests shall be performed in accordance with IES LM-80-08 (or latest).
4. Lighting and similar equipment – Radio disturbance limits. The tests shall be performed in accordance with latest TIS 1955-2551.

DRAFT
Bid No. IFTS-LPLC-AEC-NPUP-W11-01
เอกสารไม่ควบคุม
รับรองสำเนาโดย หฟอ-ร. กสส-ร. อวส.
ก่อนนำไปใช้งาน
ต้องตรวจสอบ Revision ล่าสุด
ฝ่ายวิศวกรรมระบบส่ง กฟผ.
นายสมชัย เจริญศรีเกษม
ผู้ช่วยผู้อำนวยการฝ่ายวิศวกรรมระบบส่ง - 1
ทำการแทน ผู้อำนวยการฝ่ายวิศวกรรมระบบส่ง

5. Luminaires. The tests shall be performed in accordance with latest IEC 60598.

6. Limitation of harmonic current emission. The tests shall be performed in accordance with latest IEC 61000-3-2.

(b) **Quality Conformance Tests.** The tests shall be performed in accordance with the manufacturer's standard.

1. General Inspection

2. Dimension measurement

c. Solar Lighting Fixture for Fence and Access Road

(a) **Design Tests.** These tests may be omitted if a design test record can be submitted

LED

1. Degrees of protection test against solid foreign objects and splashing water. The tests shall be performed in accordance with IEC 60529.

2. Electrical and Photometric Measurements of Solid-State Lighting Products. The tests shall be performed in accordance with IES LM-79-08 (or latest).

3. Measuring Lumen Maintenance of LED Light Sources. The tests shall be performed in accordance with IES LM-80-08 (or latest).
4. Luminaires. The tests shall be performed in accordance with IEC 60598.

Charger

1. Battery charge controllers for photovoltaic systems - Performance and functioning. The tests shall be performed in accordance with IEC 62509.

Solar panel

1. Terrestrial photovoltaic (PV) modules- Design qualification and type approval. The tests shall be performed in accordance with IEC 61215.

2. Photovoltaic (PV) module safety qualification. The tests shall be performed in accordance with IEC 61730.

DRAFT
Bid No. IETS-LPLC-IEC-PUP-MC1-01
นายสมชัย เจริญศรีเกษม
ผู้ช่วยผู้อำนวยการฝ่ายวิศวกรรมระบบส่ง - 1
ทำการแทน ผู้อำนวยการฝ่ายวิศวกรรมระบบส่ง
เอกสารไม่ควบคุม
รับรองสำเนาโดย หหอ-ร. กสส-ร. อวส.
ก่อนนำไปใช้งาน
ต้องตรวจสอบ Revision ล่าสุด
ฝ่ายวิศวกรรมระบบส่ง กฟผ.
13 กรกฎาคม 2569

Battery

1. Safety requirements for secondary lithium cells and batteries. The tests shall be performed in accordance with IEC 62619 or IEC 62133.

(b) Quality Conformance Tests. The tests shall be performed in accordance with the manufacturer's standard.

1. General Inspection

2. Dimension measurement

611-9 Drawings and Documents for Switchyard Lighting Fixtures

611-9.1 For Supply Project

Drawings and documents shall at least comprise the followings.

A. Drawings

Item	Description	Approval and Final Dwgs	Reproducible Dwgs
1	Lighting fixture outline including dimension	x	-
2	Wiring diagram	x	-
3	Photometric data	x	-

B. Documents

Item	Description	Printed Documents	CD-ROM
1	Test procedure (Factory test)	x	-
2	Test schedule (Factory test)	x	-
3	Test report (Factory test)	x	-
4	Instruction manual	x	-

DRAFT
Bid No. IEPS-LPLC-TIEC-NPUP-MC-01

เอกสารไม่ควบคุม
รับรองสำเนาโดย หพอ-ร. กสส-ร. อวส.
ก่อนนำไปใช้งาน
ต้องตรวจสอบ Revision ล่าสุด
ฝ่ายวิศวกรรมระบบส่ง กฟผ.
นายสมชัย เจริญศรีเกษม
ผู้ช่วยผู้อำนวยการฝ่ายวิศวกรรมระบบส่ง ความ 1 ภาคม 2569
ทำการแทน ผู้อำนวยการฝ่ายวิศวกรรมระบบส่ง

611-9.2 For Supply and Construction Project

Drawings for Approval, Final Drawing, Documents and CD-ROM shall at least comprise the followings.

Item	Drawings Title
1	Lighting fixture outline including dimension
2	Wiring diagram
3	Photometric data
4	Technical data of lamp and ballast

611-10 Instruction Manuals for Switchyard Lighting Fixtures

Instruction manuals shall consist of all necessary information and shall comprise at least the following parts.

Part A Installation

1. Flood lighting fixture
2. Street and area lighting fixture
3. Solar lighting fixture for fence and access road

Part B Complete set of all final drawings, technical data sheets or catalogs arranged in order of each complete item.

1. Lighting fixture outline including dimension
2. Wiring diagram
3. Photometric data
4. Technical data of lamp and ballast
5. Lamp post outline including dimension

DRAFT
Bid No. IETS-LPLC-TNEC-NPCUP-MC1-01

เอกสารไม่ควบคุม
รับรองสำเนาโดย หพอ-ร. กสส-ร. อวส.
ก่อนนำไปใช้งาน
ต้องตรวจสอบ Revision ล่าสุด
ฝ่ายวิศวกรรมระบบส่ง กฟผ.
13 กรกฎาคม 2569

นายสมชัย เจริญศรีเกษม
ผู้ช่วยผู้อำนวยการฝ่ายวิศวกรรมระบบส่ง - 1
ทำการแทน ผู้อำนวยการฝ่ายวิศวกรรมระบบส่ง

(For HID lamp only)

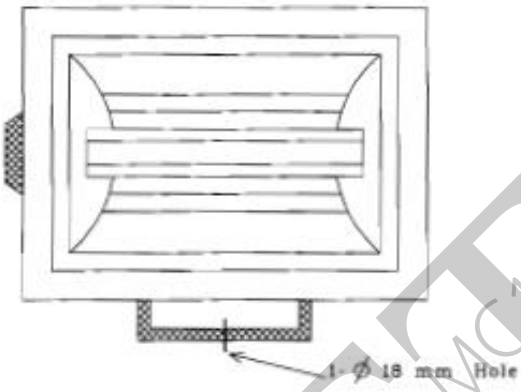

230 V FLOOD LIGHTING FIXTURE

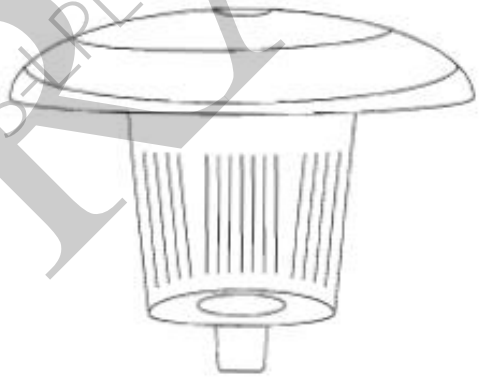

230 V STREET AND AREA LIGHTING FIXTURE

DRAFT
Bid No. IETS-PLC-TIEC-NPUP-MC1-01

เอกสารไม่ควบคุม
รับรองสำเนาโดย หหอ-ร. กสส-ร. อวส.
ก่อนนำไปใช้งาน
ต้องตรวจสอบ Revision ล่าสุด
ฝ่ายวิศวกรรมระบบส่ง กฟผ.
13 กรกฎาคม 2569

Rev.	Description	Date	SUBSTATION ELECTRICAL EQUIPMENT ENGINEERING DEPARTMENT			
			LIGHTING FIXTURES			
			Date : 11/08	Dwg. No. : LX-611	SH. 01/01	Rev. 2

นายสมชัย เจริญศรีเกษม
ผู้ช่วยผู้อำนวยการฝ่ายวิศวกรรมระบบส่ง - 1
ทำการแทน ผู้อำนวยการฝ่ายวิศวกรรมระบบส่ง

SECTION J

DRAWINGS

DRAFT

Drawing/ Catalog List (For Reference Only)

Schedule A1&C1 : Switchyard Lighting Fixture							
Page		**Drawing/Catalog No.**	**Part A**	**Part B**	**Part C**	**Part D**	**Legend**
1	EGAT	ST-LP-0-03	A1-2	-	C1-2	-	-
2	EGAT	SD-AB-0-01	A1-2	-	C1-2	-	-

Schedule A2 : Solar Lighting Fixture							
Page		**Drawing/Catalog No.**	**Part A**	**Part B**	**Part C**	**Part D**	**Legend**
3	EGAT	LT-FX-0-03	A2-1	-	-	-	-
1	EGAT	ST-LP-0-03	A2-2	-	-	-	-
2	EGAT	SD-AB-0-01	A2-2	-	-	-	-

Schedule A4&B2&C3&D1 : Compression Connector and Miscellaneous Hardware							
Page		**Drawing/Catalog No.**	**Part A**	**Part B**	**Part C**	**Part D**	**Legend**
4	PLP	A3DD4749T	A4-1	B2-3	C3-1	D1-3	12.21
5	PLP	A4DD17829T	A4-2	-	C3-2	D1-4	16.45
6	PLP	A4DD16883T	A4-3	B2-5	C3-3	D1-5	17.43
7	PLP	A4DD16227T	A4-4	-	C3-4	-	24.15
8	PLP	A4DD3792T	A4-5	B2-8	C3-5	D1-6	46.61
9	PLP	A4DD08248T	A4-6	-	C3-6	-	80.01
10	PLP	A4DD1114T	A4-7	B2-9	C3-7	D1-7	80.06
11	PLP	A4DD10476T	A4-8	B2-10	C3-8	-	80.11
12	PLP	A4DD17834T	A4-9	-	C3-9	-	80.16
13	PLP	A4DD17835T	A4-10	B2-11	C3-10	D1-8	80.17
14	PLP	A4DD17798T	A4-11	B2-12	C3-11	-	80.23
15	PLP	A4DD14164T	A4-12	B2-14	C3-12	D1-9	80.31
16	PLP	A4DD17520T	A4-13	-	C3-13	-	80.36
17	PLP	A4DD17880T	A4-14	B2-15	C3-14	D1-10	80.38
18	PLP	A4DD17521T	A4-15	-	C3-15	-	80.39
19	PLP	A4DD10569T	A4-16	B2-16	C3-16	-	80.41
20	PLP	A4DD17490T	A4-17	B2-17	C3-18	-	80.51
2	EGAT	SD-AB-0-01	A4-18	B2-21	C3-19	-	90.31
	EGAT	SD-AB-0-01	A4-19	B2-22	C3-20	-	90.32
	EGAT	SD-AB-0-01	A4-20	B2-23	C3-21	-	90.36
	EGAT	SD-AB-0-01	A4-21	B2-24	C3-22	-	90.46
21	Lorunser	771.059.9	-	B2-1	-	D1-1	16.45A
22	Lorunser	1FB767-133	-	B2-2	-	-	17.55A
23	PLP	A4DD16931T	-	B2-4	-	-	16.49
24	PLP	A4DD17836T	-	B2-6	-	-	17.55
25	PLP	A4DD08740T	-	B2-7	-	-	24.45
26	PLP	A4DD17730T	-	B2-13	-	-	80.26
27	PLP	A4DD17643T	-	B2-18	-	-	80.52
28	PLP	A4DD17828T	-	B2-19	-	-	80.60
29	PLP	A4DD10547T	-	B2-20	-	-	XX.XX
30	PLP	A4DD4372T	-	-	C3-17	-	80.42
31	EGAT	SE-IS-9-01-02/03	-	-	-	D1-2	A903

Schedule B3&D2 : 500 kV Bus Fitting							
Page		**Drawing/Catalog No.**	**Part A**	**Part B**	**Part C**	**Part D**	**Legend**
32	SubCon	BA07343	-	B3-1	-	-	13.98A
33	Lorunser	1JB008-140	-	B3-2	-	-	15.47A
34	Lorunser	1KA100-141	-	B3-3	-	-	15.57A
35	Lorunser	1JJ821-141	-	B3-4	-	-	15.87A
36	Lorunser	3-19019/1E	-	B3-5	-	D2-1	28.93A
37	Lorunser	3-19019/1B	-	B3-6	-	-	28.95A
38	Lorunser	3-19019/2E	-	B3-7	-	D2-2	28.96A
39	Lorunser	3-19019/3	-	B3-8	-	D2-3	28.99A
40	Lorunser	1CA081-143	-	B3-9	-	-	30.87A
41	RIBE	BA04353	-	B3-10	-	-	39.48A
42	RIBE	BA04356	-	B3-11	-	-	41.53A
43	Lorunser	1RB100-090	-	B3-12	-	-	45.93A
44	Lorunser	1QA102-040	-	B3-13	-	D2-4	47.15A
45	RIBE	Q4K-203	-	B3-14	-	D2-5	47.22A
46	Lorunser	1DG010-163	-	B3-15	-	-	48.04A
47	Lorunser	1HG407-041	-	B3-16	-	D2-6	49.56A

DRAFT

Schedule A5&B4&C4&D3 : 230 kV and below Bus Fitting							
Page		**Drawing/Catalog No.**	**Part A**	**Part B**	**Part C**	**Part D**	**Legend**
48	Burndy	CHS20A	A5-1	-	C4-2	-	12.55
49	Burndy	UHKR16A-5B	A5-2	-	C4-3	-	13.45
50	Burndy	U2HKR16A-3B	A5-3	-	C4-5	-	13.73
51	Burndy	WOH18A-5B	A5-4	-	C4-8	-	15.43
52	Burndy	WOH20A-5B	A5-5	-	C4-9	-	15.45
53	Burndy	WOH24A-5B	A5-6	-	C4-10	-	15.47
54	Burndy	WXHP20A-5B-SG	A5-7	-	-	-	15.55
55	Burndy	WXHP24A-5B-SG5	A5-8	-	-	-	15.57
56	Burndy	W4A54R-6N-SG	A5-9	-	-	-	28.48
57	Burndy	W2A54R-4N	A5-10	-	C4-11	-	28.63
58	Burndy	WA41R-4N	A5-11	-	-	-	29.81
	Burndy	WA54R-4N	A5-12	B4-5	C4-12	-	29.83
59	Burndy	SWAC18A-34N	A5-13	-	C4-14	-	30.03
60	Burndy	SWAC20A-34N-SG	A5-14	-	C4-15	-	30.05
59	Burndy	SWAC24A-44N	A5-15	-	-	-	30.07
61	Burndy	WXA20A-4N-SG4	A5-16	-	C4-17	-	30.15
62	Burndy	SWT18A18A-80	A5-17	-	C4-18	-	39.07
	Burndy	SWT20A20A-80	A5-18	-	-	-	39.29
	Burndy	SWT24A20A-80	A5-19	-	C4-19	-	39.48
63	Burndy	SWAT18A18A-20	A5-20	-	-	-	41.13
	Burndy	SWAT20A18A-20	A5-21	-	C4-20	-	41.32
	Burndy	SWAT20A20A-20	A5-22	-	-	-	41.34
	Burndy	SWAT24A20A-20	A5-23	-	C4-21	-	41.53
64	Burndy	SWAB20A-4N	A5-24	B4-6	C4-23	-	42.04
65	Burndy	SWAB24A-4N	A5-25	-	-	-	42.06
66	Burndy	WS18A-F	A5-26	-	-	-	44.02
	Burndy	WS20A-F	A5-27	-	C4-24	-	44.04
	Burndy	WS24A-F	A5-28	-	C4-25	-	44.06
67	Burndy	LB18A	A5-29	-	C4-26	-	45.54
	Burndy	LB20A	A5-30	B4-9	C4-27	-	45.56
	Burndy	LB24A	A5-31	-	C4-28	-	45.58
68	Burndy	S2GBP46A-10	A5-32	-	C4-29	-	47.05
69	Burndy	S2GBP46A-20	A5-33	-	C4-30	-	47.15
70	Burndy	N4P46A-SG	A5-34	-	-	-	47.21
71	Burndy	50x250 HSSB	A5-35	B4-10	C4-31	-	90.51
	Burndy	50x350 HSSB	A5-36	B4-11	-	D3-2	90.52
	Burndy	50x300 HSSB	A5-37	-	C4-32	-	90.54
	Burndy	50 HSSN	A5-38	B4-12	C4-33	D3-3	90.61
	Burndy	50 FWSS	A5-39	B4-13	C4-34	D3-4	90.66
	Burndy	50x106 BWSS	A5-40	B4-14	C4-35	D3-5	90.76
72	Burndy	P8A	A5-41	B4-15	C4-36	D3-6	90.91
73	Burndy	U2HKR16A-5B	-	B4-1	-	-	13.68
74	Burndy	U4HKR16A-5-SG	-	B4-2	-	-	13.98
75	Burndy	UHG20A-3B	-	B4-3	C4-7	-	15.25
76	Lorunser	1KA510-090	-	B4-4	-	-	15.35
77	Burndy	WS94A-F	-	B4-7	-	-	44.08
78	Lorunser	1AA100-090	-	B4-8	-	-	43.54
79	Lorunser	1TZ010-127	-	B4-16	-	-	90.15
80	Burndy	CHS18A	-	-	C4-1	-	12.53
81	Burndy	UHKR16A-3B	-	-	C4-4	-	13.55
82	Burndy	UHG18A-3-B	-	-	C4-6	-	15.23
83	Burndy	WA54R-4N-90	-	-	C4-13	-	29.93
84	Burndy	WXA18A-4N-SG1	-	-	C4-16	-	30.13
85	Burndy	SWAB19A-34N	-	-	C4-22	-	42.02
36	Lorunser	3-19019/1E	-	-	-	D3-1	28.93

DRAFT

Schedule A6&B5&C5&D4 : Grounding Material							
Page		**Drawing/Catalog No.**	**Part A**	**Part B**	**Part C**	**Part D**	**Legend**
86	Kumwell	CR2-C-5/84/0	A6-2	-	-	D4-2	60.02
87	Kumwell	CC2-C-4/04/0	A6-3	B5-1	C5-1	D4-3	60.03
88	Kumwell	CS3-Y-4/0	A6-4	B5-2	C5-2	D4-4	60.04
86	Kumwell	CP1-X-4/0	A6-5	-	C5-3	D4-5	60.05
89	Kumwell	CC4-C-4/04/0	A6-6	-	-	D4-6	60.06
88	Kumwell	CS4-Y-4/0	A6-7	B5-3	C5-4	D4-7	60.07
90	Kumwell	HCC00-XY	A6-8	B5-4	C5-5	D4-8	60.09
86	Kumwell	CR2-C-5/84/0	A6-9	-	-	D4-9	60.10
87	Kumwell	CC2-C-4/04/0	A6-10	B5-5	C5-6	D4-10	60.11
88	Kumwell	CS3-Y-4/0	A6-11	B5-6	C5-7	D4-11	60.12
86	Kumwell	CP1-X-4/0	A6-12	-	C5-8	D4-12	60.13
89	Kumwell	CC4-C-4/04/0	A6-13	-	-	D4-13	60.14
88	Kumwell	CS4-Y-4/0	A6-14	B5-7	C5-9	D4-14	60.15
91	Kumwell	KTA000	A6-15	B5-8	C5-10	D4-15	60.17
	Kumwell	KTA014U	A6-16	B5-9	C5-11	D4-16	60.18
92	Kumwell	KGXTEL-4/0	A6-17	B5-10	C5-12	D4-17	60.19
93	Kumwell	GXCCP-G2P	A6-18	B5-11	C5-13	-	60.20d
94	Kumwell	KGZFCB 39533	A6-19	-	C5-14	-	60.21
95	Kumwell	KGRC-A	-	B5-12	C5-15	D4-18	60.22
96	Kumwell	CC14-C-#6#6	-	B5-13	-	D4-19	60.23
97	Kumwell	KTH 400-12DN	-	B5-14	-	-	60.52

DRAFT

DWG.NO. ST-LP-0-03

REV. 01 01 0

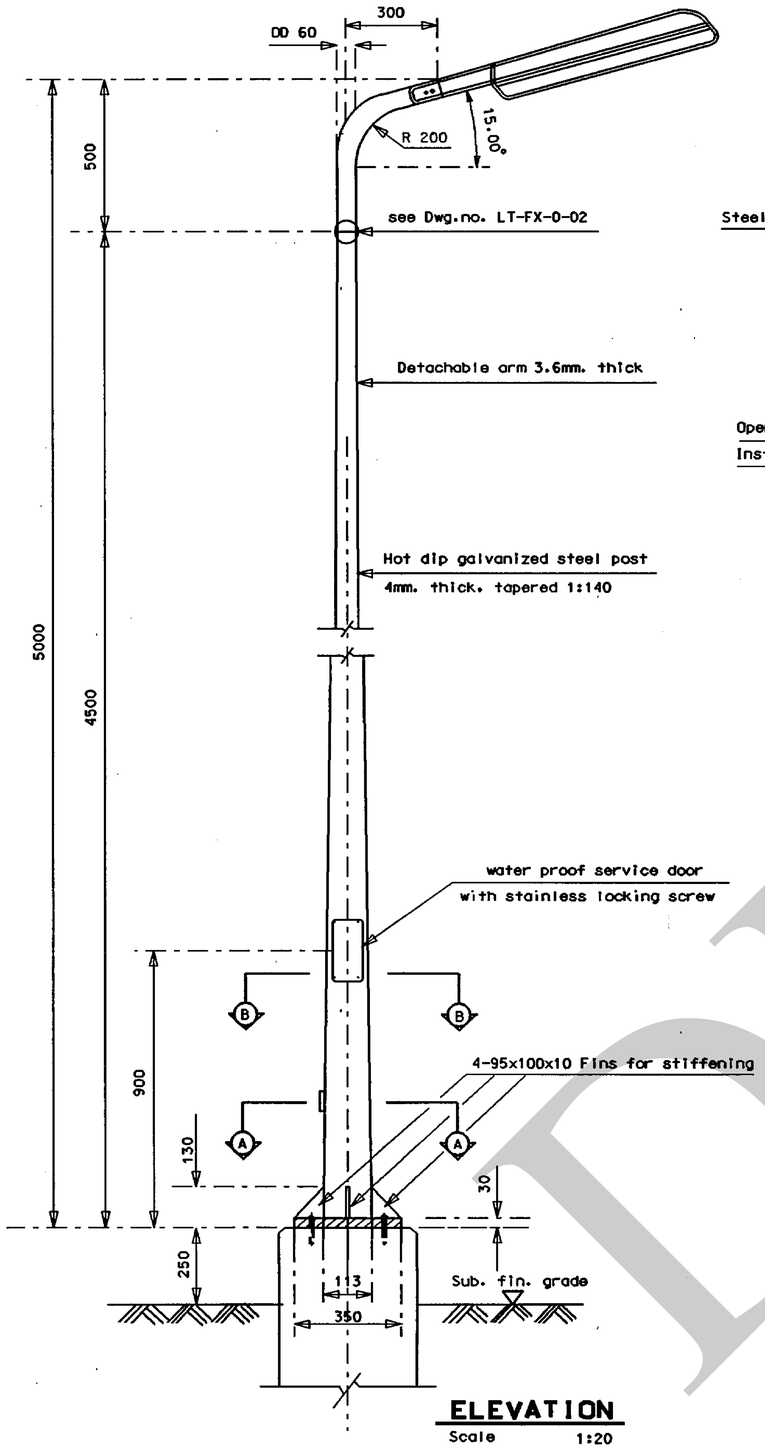

ELEVATION

Scale 1:20

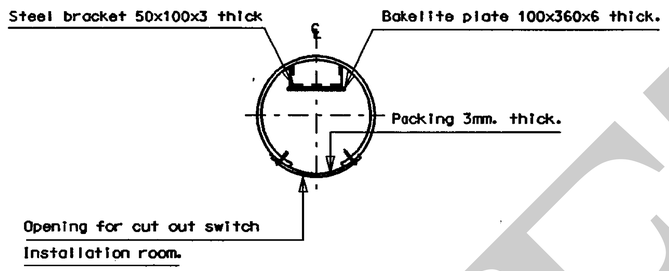

SECTION (B) - (B)

Scale 1:10

NOTES

1. All dimensions are in millimeters except otherwise showns.
2. All structural steel shall be conform to ASTM designation A 36-70 a or equivalent.
3. All bolts and nuts shall be conform to ASTM designation A 307 or equivalent.
4. All materials shall be hot - dip galvanized to meet the requirment of ASTM (A123).after fabrication.
5. For detail of anchor bolt see Dwg. No. SD-AB-0-01 01/01 Ø25mm. Embedded length ''B'' = 800mm.. ''A''=124mm.

REFERENCE DRAWING

1. DETAIL OF FENCE AND ACCESS ROAD LIGHTING FIXTURE INSTALLATION (LED) ...DWG.NO.LT-FX-0-02
2. LAMP POST FOR FENCE AND ACCESS ROAD LIGHTING LED TYPE FOUNDATION ...DWG.NO. FD-LP-0-05 01/01 Rev.0

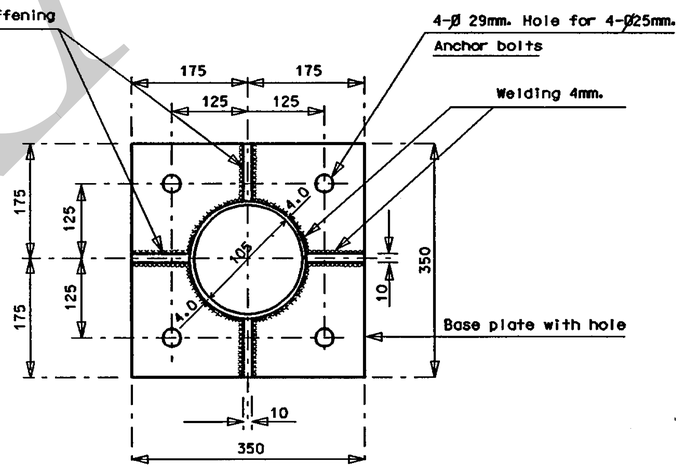

SECTION (A) - (A)

Scale 1:10

DRAFT

CABINET NO. V1
RUN NO. 3020

REV.NO.	JOB NO.	JOB DESCRIPTION	DRAWN	DESIGNED	VERIFIED	VALIDATED	RECOMMENDED	CONCURRED	APPROVED	DATE
0	-	LAMP POST FOR LED LIGHTING	Nipat K.	-	-	-	-	-	-	-

ELECTRICITY GENERATING AUTHORITY OF THAILAND

DRAWN Nipat K.
DESIGNED
VERIFIED
APPROVED
ASSISTANT GENERAL-TRANSMISSION SYSTEM ENGINEERING
VALIDATED
RECOMMENDED
CONCURRED
DATE 15/08/13

DRAWING NAME: STANDARD DRAWING

DESCRIPTION OF DETAIL DRAWING: TAPERED GALVANIZED STEEL LAMP POST FOR FENCE AND ACCESS ROAD LIGHTING LED TYPE (LP3)

JOB NO.	REPLACING DWG.NO.	DWG.NO.	REV.
-	-	ST-LP-0-03	01 0

LAMP POST\EDIT2013-08-05FD-ST\ST-LP-0-03-01R0.DGN
3-2006 10:11
7

DWG.NO. SD-AB-O-01 REV. 01 7

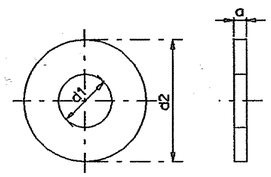

RING FILLER

TABLE FOR RING FILLERS Unit : mm

Nominal Diameter d	d1 Nominal	d1 Tolerance	d2 Nominal	d2 Tolerance
M12	13.5	+0.7 −0	30.0	+0 −1.0
M16	17.5	+0.7 −0	40.0	+0 −1.0
M20	21.5	+0.8 −0	50.0	+0 −1.0
4 M22	23.5	+0.8 −0	57.0	+0 −1.0
M24	25.5	+0.8 −0	65.0	+0 −1.0
M28	29.5	+0.8 −0	75.0	+0 −1.0
M32	33.5	+0.8 −0	85.0	+0 −1.0

RING FILLERS

Unit : mm

a	Tolerance
4, 5	±0.5
6	±0.7
8	±0.7
9	±0.7
12	±1.0

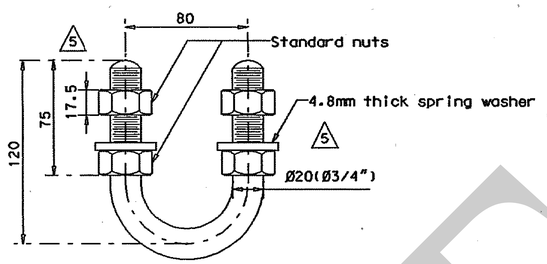

M20 U-BOLT

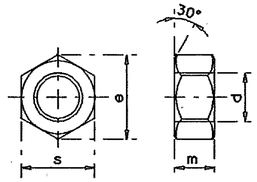

HEX NUT

4 TABLE FOR HEX NUT

Unit : mm

Nominal Diameter d	m Nominal	m Tolerance	s Nominal	s Tolerance	e Approx
M12	10.5	±0.8	18.0	+0 −0.8	20.8
M16	14.0	±0.9	24.0	+0 −0.8	27.7
M20	17.5	±0.9	30.0	+0 −0.8	34.6
7 M22	19.2	±0.9	32.0	+0 −1.0	38.1
M24	21.0	±1.0	36.0	+0 −1.0	41.6
M28	24.5	±1.0	42.0	+0 −1.0	48.5
M32	28.0	±1.0	48.0	+0 −1.0	55.4
M36	31.5	±1.0	54.0	+0 −1.2	62.4
M39	34.1	±1.2	58.5	+0 −1.2	67.6
M42	36.1	±1.2	63.0	+0 −1.2	72.7
M60	52.5	±1.2	90.0	+0 −1.4	103.9

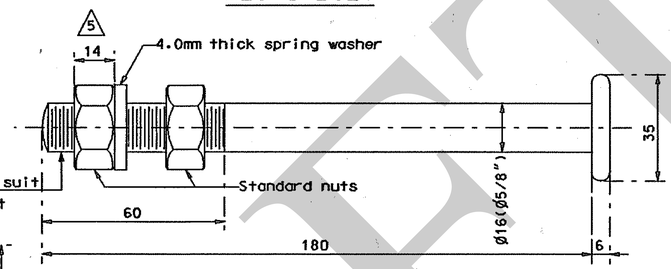

M16 STEP BOLT

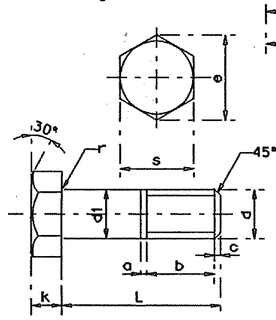

HEX BOLT

TABLE FOR HEX BOLTS(JIS) 6

Unit : mm

Nominal Diameter d	d1 Nominal	d1 Tolerance	k Nominal	k Tolerance	s Nominal	s Tolerance	e Approx	r Nominal	c Approx	a Approx	b Nominal	b Tolerance	L(tolerance) Upto 50	L(tolerance) Over 50 upto 120
M12	12.0	+0.9 −0.2	8.0	±0.8	19.0	+0 −0.8	21.9	0.6	2.0	2.0	19.5	+1.0 −0	±1.0	±1.4
M16	16.0	+0.9 −0.2	10.0	±0.8	24.0	+0 −0.8	27.7	0.6	2.0	2.0	22.0	+1.0 −0	±1.0	±1.4
M20	20.0	+0.95 −0.35	13.0	±0.9	30.0	+0 −0.8	34.6	0.8	2.5	2.5	26.5	+1.0 −0	±1.0	±1.4
M24	24.0	+0.95 −0.35	15.0	±0.9	36.0	+0 −1.0	41.6	0.8	2.5	3.0	34.0	+1.0 −0	±1.0	±1.4
M28	28.0	+0.95 −0.35	18.0	±0.9	42.0	+0 −1.0	48.3	1.0	2.5	3.0	40.5	+1.0 −0	±1.0	±1.4
M32	32.0	+1.20 −0.40	21.0	±1.0	50.0	+0 −1.0	57.7	1.0	2.5	3.5	47.0	+1.0 −0	±1.0	±1.4

TABLE FOR HEX BOLTS(ANSI) 4

Unit : mm

Nominal Diameter d	d1 Nominal	d1 Tolerance	k Nominal	k Tolerance	s Nominal	s Tolerance	e Approx	r Nominal	c Approx	a Approx	b Nominal	b Tolerance	L(tolerance) Upto 50	L(tolerance) Over 50 upto 120
M12	12.0	+0.9 −0.2	8.2	±0.8	17.7	+0 −0.8	23.0	0.6	2.0	2.0	19.5	+1.0 −0	±1.0	±1.4
M16	16.0	+0.9 −0.2	10.1	±0.8	24.0	+0 −0.8	27.1	0.6	2.0	2.0	22.0	+1.0 −0	±1.0	±1.4
M20	20.0	+0.95 −0.35	13.0	±0.9	30.0	+0 −0.8	33.9	0.8	2.5	2.5	26.5	+1.0 −0	±1.0	±1.4
M22	22.0	+0.95 −0.35	14.6	±1.1	33.0	+0 −0.8	37.3	0.8	2.5	2.5	30.0	+1.0 −0	±1.0	±1.4
M24	24.0	+0.95 −0.35	17.0	±1.3	36.0	+0 −0.8	40.6	0.8	2.5	2.5	34.0	+1.0 −0	±1.0	±1.4
M28	28.0	+0.95 −0.35	18.8	±1.5	40.0	+0 −0.8	47.4	0.8	2.5	2.5	40.5	+1.0 −0	±1.0	±1.4
M32	32.0	+0.95 −0.35	21.5	±1.6	43.4	+0 −0.8	54.2	0.8	2.5	2.5	47.0	+1.0 −0	±1.0	±1.4

5 NOTES

1. ALL DIMENSIONS ARE IN MILLIMETER.UNLESS OTHERWISE SHOWN
2. ALL MATERIAL SHALL CONFORM TO THE FOLLOWING DESIGNATION OR EQUIVALENT
   HEX.BOLT.....ASTM A394 TYPE O
   HEX. NUT.....ASTM A563 CLASS A
   U-BOLT.....ASTM A394 TYPE O UNLESS OTHERWISE NOTED
   SPRING WASHER.....ASTM A394 TYPE O UNLESS OTHERWISE NOTED.
   RING FILLER.....JIS SS 400
   PLAIN WASHER .....JIS SS 400
   ANCHOR BOLTS .....A 307 CLASS C
   STEP BOLTS .....A 307 CLASS A
3. ALL MATERIALS SHALL BE HOT-DIP GALVANIZED TO MEET THE REQUIRMENT OF ASTM A 153 AFTER FABRICATION
4. LENGTH OF ANCHOR SHALL BE AS SHOWN IN TABLE FOR ANCHOR BOLT UNLESS OTHERWISE SHOWN ON THE INDIVIDUAL TYPICAL DRAWING.
5. COMPLETE SET OF BOLT SHALL BE AS FOLLOWING ASSEMBLY UNLESS
   CONNECTION BOLT.....1 BOLT. 1 NUT AND 1 SPRING WASHER
   ANCHOR BOLT.....1 BOLT. 3 NUT AND 2 PLAIN WASHER OF 6mm.THK.
   STEP BOLT.....1 BOLT.2 NUT AND 1 SPRING WASHER
   U-BOLT.....1 BOLT.4 NUT AND 2 SPRING WASHER
6. THREADS FOR STEP BOLT TO BE UNDER CUT BY 0.3mm FOR GALVANIZING
7. ALL NUTS SHALL BE STANDARD HEXAGONAL.
8. H=HEIGHT OF STANDARD NUT IN mm

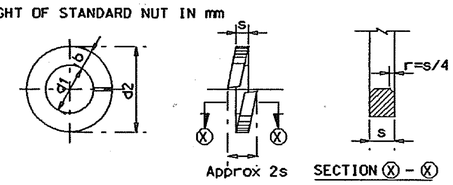

SPRING LOCK WASHER

6 TABLE FOR SPRING LOCK WASHERS(JIS)

Unit : mm

Nominal Diameter d	d1 Nominal	d1 Tolerance	d2 Max.	b Min.	s Min.
M12	12.2	+0.6 −0	21.5	4.2	3.0
M16	16.2	+0.8 −0	28.0	5.2	4.0
M20	20.2	+0.8 −0	33.8	6.1	5.1
M24	24.5	+1.0 −0	40.3	7.1	5.9
7 M28	28.2	+1.2 −0	46.3	8.2	7.0
M32	32.2	+1.4 −0	53.7	9.1	8.0

4 TABLE FOR SPRING LOCK WASHERS(ANSI)

Unit : mm

Nominal Diameter d	d1 Nominal	d1 Tolerance	d2 Max.	b Min.	s Min.
M12	12.2	+0.8 −0	21.5	4.3	3.2
M16	16.2	+0.8 −0	27.6	5.2	4.0
M20	20.2	+0.8 −0	33.3	6.0	4.8
M22	22.2	+0.8 −0	36.5	6.6	5.4
M24	24.2	+0.8 −0	39.8	7.2	5.9
M28	28.2	+0.8 −0	46.2	8.3	7.0
M32	32.2	+0.8 −0	52.5	9.3	8.1

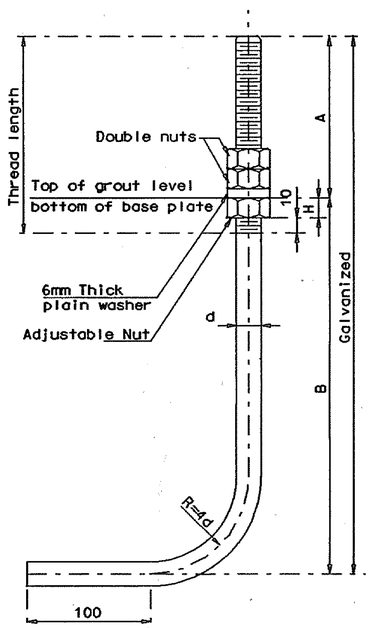

ANCHOR BOLT DETAIL

TABLE FOR ANCHOR BOLTS

Anchor bolt size (mm)	Diameter d (mm)	A (mm)	Embeded Length B (mm)	Nut Width H (mm)	Radius R (mm)
M 16x555x100 128mm Thread length	16	105	450	13	64
M 20x712x100 138mm Thread length	20	112	600	16	80
M 22x818x100 146mm Thread length	22	118	700	18	88
M 25x924x100 (OR M24) 153mm Thread length	24 25	124	800	19	100
M 28x1036x100 168mm Thread length	28	136	900	22	112
M 32x1142x100 178mm Thread length	32	142	1000	26	128
M 35x1253x100 192mm Thread length	35	153	1100	29	140
M 38x1357x100 198mm Thread length	38	157	1200	31	152
M 42x1427x100 221mm Thread length	42	177	1250	34	168
5 M 45x1585x100 231mm Thread length	45	185	1400	36	180
M 60x2142x100 250mm Thread length	60	192	1950	48	240

REV.NO.	JOB NO.	JOB DESCRIPTION	DRAWN	DESIGNED	VERIFIED	VALIDATED	RECOMMENDED	CONCURRED	APPROVED	DATE
7	-	Revised size of Nut & Washers	P.ชะเรืองวิทย์	P.Lerwate	-	-	-	-	-	-
6	-	Add JIS Hex bolts and spring washers tables	K.ชะเรืองวิทย์	P.Lerwate	-	-	-	-	-	23/9/2553
5	-	Add size of M45 anchor bolt and revise notes and illustrations	K.ชะเรืองวิทย์	P.Lerwate	-	-	-	-	-	8/9/2552
4	-	Add details of M22 hex bolt and spring lock washer and revise drawing as per ANSI standards	K.ชะเรืองวิทย์	P.Lerwate	-	-	-	-	-	19/6/2552
3	-	Additional sizes of ring filler, hex nut, hex bolt , and spring washer	K.ชะเรืองวิทย์	P.Lerwate	-	-	-	-	-	12/6/2551

ELECTRICITY GENERATING AUTHORITY OF THAILAND

DRAWN P.ชะเรืองวิทย์ 1
DESIGNED ไพโรจน์
VERIFIED
APPROVED ASSISTANT GOVERNOR - TRANSMISSION SYSTEM ENGINEERING
VALIDATED CHIEF, TRANSMISSION SYSTEM CIVIL ENGINEERING DEPARTMENT
RECOMMENDED ASST.DIR.TRANSMISSION SYSTEM ENGINEERING DIV.-TRAN.LINE
CONCURRED DIRECTOR TRANSMISSION SYSTEM ENGINEERING DIVISION
DATE 17/10/41

DRAWING NAME: STANDARD DRAWING
DESCRIPTION OF DETAIL DRAWING: DETAILS OF STANDARD BOLTS, NUTS, RING FILLERS, SPRING LOCK WASHERS
JOB NO. -
REPLACING DWG.NO. SD-AB-0-01-01/01r.6
DWG.NO. SD-AB-0-01
REV. 01 7

CABINET NO V5
RUN NO 1601

DRAFT

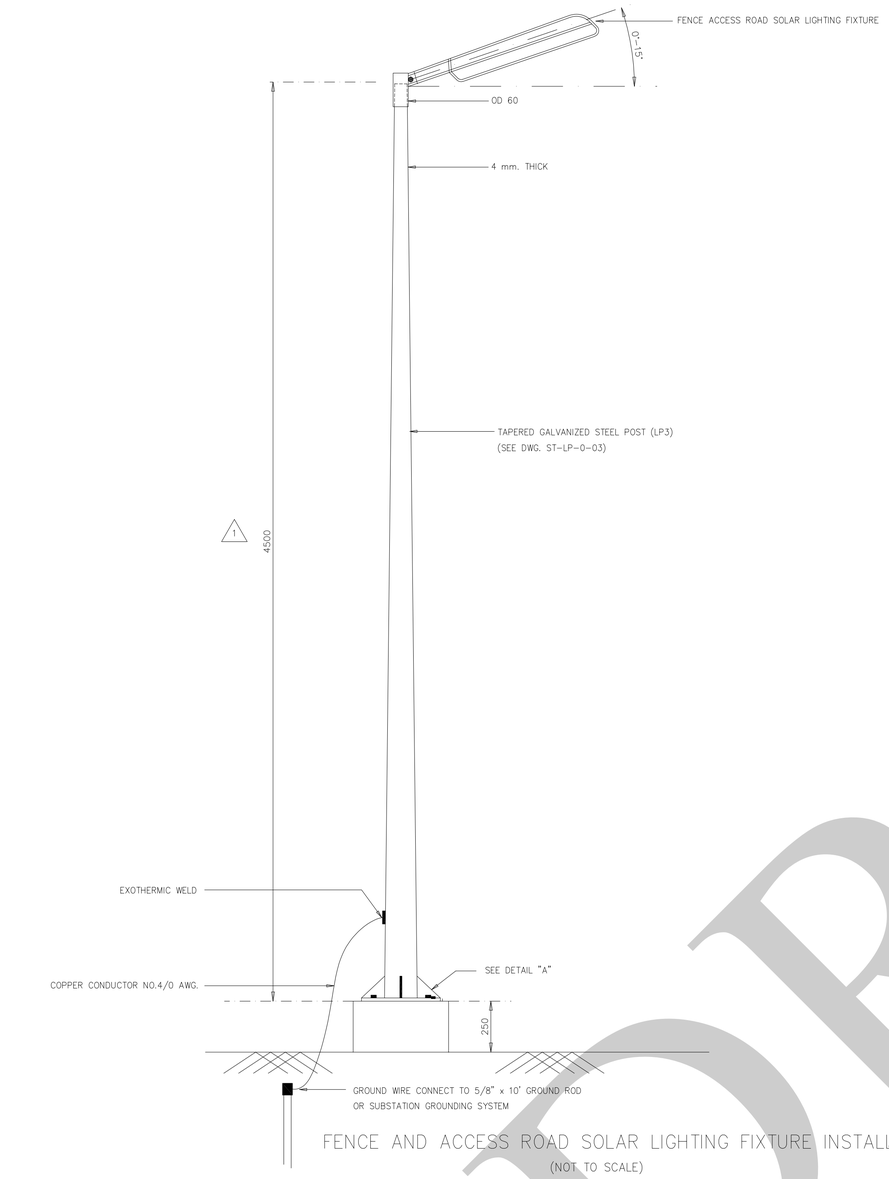

FENCE AND ACCESS ROAD SOLAR LIGHTING FIXTURE INSTALLATION

(NOT TO SCALE)

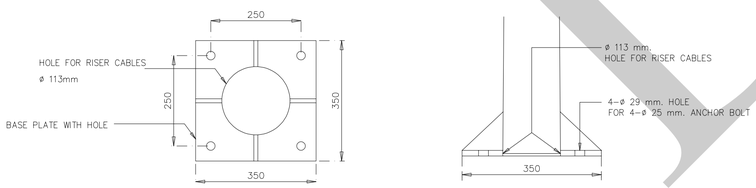

TOP VIEW

CUT–AWAY VIEW

DETAIL "A"

FENCE ACCESS ROAD SOLAR LIGHTING FIXTURE

1. THE HOUSING OF FIXTURE SHALL BE CORROSION RESISTANT DIE CAST ALUMINUM ALLOY AND HAVE ADEQUATE SURFACE AREA TO ENSURE FAST HEAT DISSIPATION AND SUITABLE FOR THE AMBIENT TEMPERATURE. NO ADDITIONAL COOLING OR VENTILATION APART FROM THE COOLING FINS PROVIDED ON THE LUMINAIRE HOUSING THE PROTECTIVE FRONT COVER SHALL BE MADE OF CLEAR POLY–CARBONATE OR HEAT SHOCK RESISTANCE GLASS. HIGH QUALITY SILICONE GASKET. NO CHEMICAL GLUE IS USED.
2. THE FIXTURE SHALL BE PROVIDED THE RESISTANCE OF ENCLOSURES OF THE INTRUSION OF DUST AND LIQUIDS AT LEAST IP65. LUMINAIRE COMPONENTS EXPOSED TO THE ENVIRONMENT SHALL BE PAINTED OR ANODIZED FINISH.
3. LIGHTING FIXTURE, BATTERY, CHARGER AND SOLAR PANEL SHALL BE WITHIN SINGLE COMPARTMENT (ALL IN ONE).
4. EACH OF LIGHTING MODULE, BATTERY, CHARGER AND SOLAR PANEL SHALL BE DESIGNED AS INDIVIDUALLY REPLACEABLE COMPONENTS.
5. THE HOUSING OF THE LIGHTING FIXTURE SHALL BE ADJUSTABLE FROM 0 TO 15 DEGREES.

FENCE ACCESS ROAD SOLAR LIGHTING LED LAMP

1. FENCE ACCESS ROAD SOLAR LIGHTING LED LAMP SYSTEM EFFICACY SHALL NOT BE LESS THAN 160 lumen/W, WITH MORE THAN 6,500 LUMENS. 1
2. FENCE ACCESS ROAD SOLAR LIGHTING LED LAMP SHALL MEET THE REQUIREMENT OF IES LM–79, WIDE BEAM SUITABLE FOR SPAN 15.00 m. BETWEEN POST HEIGHT 4.50 m.
3. FENCE ACCESS ROAD SOLAR LIGHTING LED SHALL HAVE A MINIMUM COLOR RENDERING INDEX (CRI) OF 70, CORRELATED COLOR TEMPERATURE (CCT) OF 5,500 K TO 6,500 K TO MEET THE REQUIREMENT OF IES LM–79.
4. FENCE ACCESS ROAD SOLAR LIGHTING LAMP SHALL HAVE 70% LUMEN MAINTENANCE AT END OF LIFE (L70) AT MAXIMUM AMBIENT TEMPERATURE 45° C AND SHOULD HAVE A USEFUL LIFE OF 50,000 OPERATING HOURS TO MEET THE REQUIREMENT OF IES LM–80.
5. FENCE ACCESS ROAD SOLAR LIGHTING CHARGER SHALL BE 12 or 24 Vdc, AND AMPACITY SHALL NOT LESS THAN 10 A, MPPT TECHNOLOGY.

FENCE ACCESS ROAD SOLAR LIGHTING WORKING PRINCIPLE

1. FENCE ACCESS ROAD SOLAR LIGHTING MUST BE OPERATED CONTINUOUSLY AT LEAST 12 HOURS WITH LIGHT OUTPUT AS SPECIFIED IN LIGHTING SCENE REQUIREMENT. ADDITIONALLY, IT SHOULD BE ABLE TO REACH A FULL CHARGE FROM AVERAGE OF 5 HOURS OF DAYLIGHT PER DAY.
2. FENCE ACCESS ROAD SOLAR LIGHTING OPERATION SYSTEM SHALL BE OFF–GRID.

SOLAR PANEL AND BATTERY

1. SOLAR PANEL SHALL BE MONOCRYSTALLINE AT LEAST 65 W 18 V. 1
2. BATTERY TYPE SHALL BE LiFePO4 AT LEAST 30 Ah 12.8 V CAPACITY.
3. BATTERY COMPARTMENT CAN BE REMOVABLE FOR EASY MAINTENANCE.
4. THE BATTERY OF THE LIGHTING FIXTURE SHALL HAVE A BACKUP TIME OF 12 HOURS.

SOLAR PANEL AND BATTERY

1. THE FENCE ACCESS ROAD SOLAR LIGHTING SHALL BE SUITABLE FOR INSTALLATION ON TAPERED GALVANIZED STEEL LAMP POST (LP3)
2. ALL MATERIALS FOR FENCE ACCESS ROAD SOLAR LIGHTING LAMP POST SHALL BE HOT–DIP GALVANIZED TO MEET THE REQUIREMENT OF ASTM A123.

INSTALLATION DETAILS

1. THE MANUFACTURER SHALL SUPPLY THE REQUIRED MISCELLANEOUS HARDWARE AND INSTRUCTION MANUAL TO INSTALL FENCE ACCESS ROAD SOLAR LIGHTING ON THE TAPERED GALVANIZED STEEL LAMP POST (LP3)

DEFAULT LIGHTING SCENE

INTERVAL (Hr)	1	2	3	4	5	6	7	8	9	10	11	12
LIGHT OUTPUT	50%	100%				25%					50%	

NOTE

1. ALL DIMENSIONS ARE IN MILLIMETERS, EXCEPT AS NOTED.
2. ANCHOR BOLTS SHALL BE SUPPLIED BY EGAT.

REFERENCE DRAWING

1. TAPERED GALVANIZED STEEL LAMP POST FOR FENCE AND ACCESS ROAD LIGHTING (LP3), SEE DWG. NO. ST–LP–O–03

DRAFT

ISO 9001 TSE : 2015 | CAD CENTER | DO NOT AMEND MANUALLY

REV.NO.	JOB NO.	JOB DESCRIPTION	DRAWN	DESIGNED	VERIFIED	VALIDATED	RECOMMENDED	CONCURRED	APPROVED	DATE
1	–	REVISED HEIGHT OF GALVANIZED STEEL POST AND SOLAR LIGHTING SPECIFICATION	–	–	–	–	–	–	–	–
–	–	DETAIL OF FENCE AND ACCESS ROAD SOLAR LIGHTING FIXTURE INSTALLATION (LED)	–	–	–	–	–	–	–	–

ELECTRICITY GENERATING AUTHORITY OF THAILAND

3

DRAWN: TACHAKORN	RECOMMENDED AND VALIDATED: KORANEE P. (CHIEF,SUBSTATION ENGINEERING DEPARTMENT)	DRAWING NAME: STANDARD DRAWING	
DESIGNED: NABHAT, KORRAKOT	CONCURRED: (ASSISTANT DIRECTOR,TRANSMISSION SYSTEM ENGINEERING DIVISION–2)	DESCRIPTION OF DETAIL DRAWING: SOLAR LIGHTING FIXTURE FOR FENCE AND ACCESS ROAD	
VERIFIED:			
APPROVED: (DIRECTOR, TRANSMISSION SYSTEM ENGINEERING DIVISION)	DATE: 19 Sep 2025	JOB NO.: –	REPLACING DWG.NO.:

DWG.NO.: LT–FX–O–03 | 01 | REV. 01 | 1

THIS DRAWING IS UNPUBLISHED. RELEASED FOR PUBLICATION
© COPYRIGHT 20 ALL RIGHTS RESERVED.

Contract No. S100074-0228Q-TS11-THPPE-CH-01

Item : A1-10, B1-7

Legend No : 12.21

REVISIONS					
P	LTR	DESCRIPTION	DATE	DWN	APVD
	5	EA 11257	18/03/11	DT	CC
	-	-	-	-	-

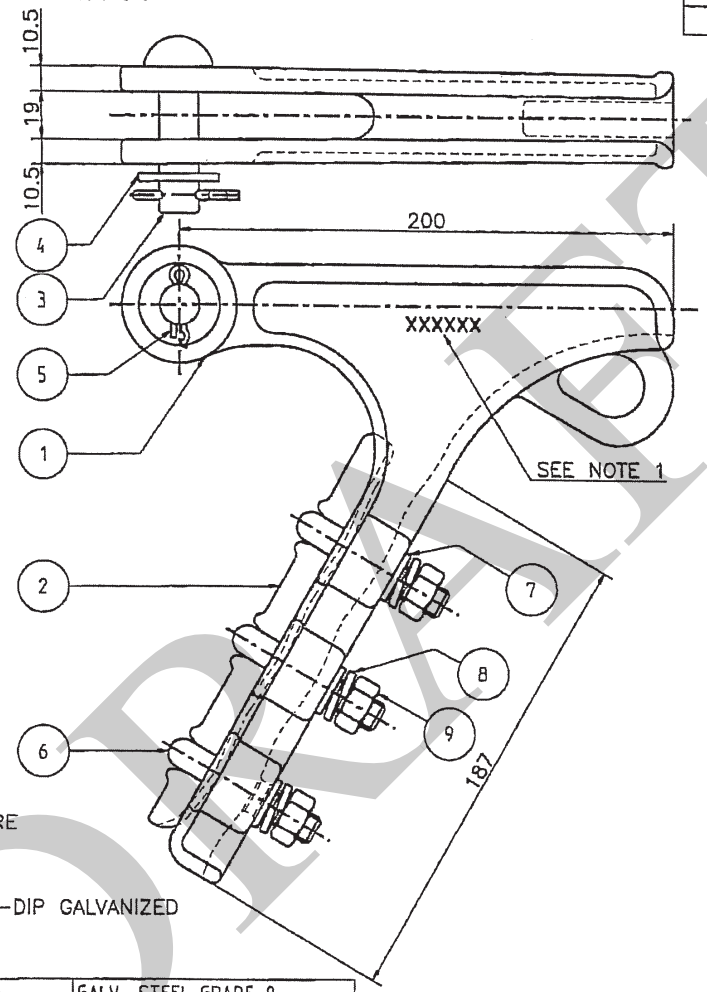

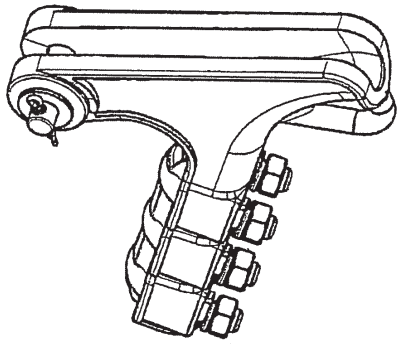

3D VIEW

NOTES

1. MARKED : STC5–15
   PLPTH
   SUPPLIER IDENTIFICATION
   MONTH/YEAR OF MANUFACTURE
2. BOLT & NUT TIGHTENING TORQUE 45 Nm.
3. MIN. UTS. 70 KN. (7,100 KG.)
4. ALL FERROUS METAL PARTS SHALL BE HOT–DIP GALVANIZED IN ACCORDANCE WITH ASTM A 153.

ITEM	REFERENCE	QTY	DESIGNATION	MATERIAL
9	SD500000	6	HEX. NUT M12	GALV. STEEL GRADE 8
8	SD500031	6	SPRING WASHER M12	GALV. STEEL SPRING
7	SD500005	6	PLAIN WASHER M12	GALV. STEEL
6	SD400045	3	U-BOLT M12-50-30 SPACING 36	GALV. STEEL
5	SD500013	1	SPLIT PIN	STAINLESS STEEL
4	SD500011	1	PLAIN WASHER Ø16	GALV. STEEL
3	SD095002	1	RIVET Ø16mm. LENGTH 63mm.	GALV. STEEL
2	SD750083	1	KEEPER	GALV. DUCTILE IRON
1	SD750090	1	BODY	GALV. DUCTILE IRON

THIS DRAWING IS A CONTROLLED DOCUMENT. IT IS SUBJECT TO CHANGE AND THE CONTROLLING ENGINEERING ORGANIZATION SHOULD BE CONTACTED FOR THE LATEST REVISION.

TOLERANCES UNLESS OTHERWISE SPECIFIED PER
Dims ≤35mm: ....±0.7mm
Dims >35mm: ..... ±2%

DIMENSIONS MILLIMETERS
PIP CODE E7183D-000
APPLICATION SPEC –
PRODUCT SPEC. –
MATERIAL –
FINISH –

CUSTOMER DRAWING FOR REFERENCE ONLY

DRAWN VK. DATE 02/05/98
CHECKED DATE Mar 21, 11
APPROVED DATE 22/3/11
WEIGHT 3.5 KG.
CAGE CODE 00***
SCALE NTS.
SHEET 1 OF 1

PREFORMED LINE PRODUCTS

NAME
STRAIN CLAMP
3U–BOLTS
COND. RANGE Ø5–Ø15 MM.

SIZE A4
DRAWING NUMBER A3DD4749T
REV 5

DRAFT

THIS DRAWING IS UNPUBLISHED. RELEASED FOR PUBLICATION
© COPYRIGHT 20 ALL RIGHTS RESERVED.

Contract No. S100074-0228Q-TS11-THPPE-CH-01
Item : A1-1, B1-1
Legend No :16.45

REVISIONS					
P	LTR	DESCRIPTION	DATE	DWN	APVD
	1	EA 10375	5/10/10	UC	CC
	-	-	-	-	-

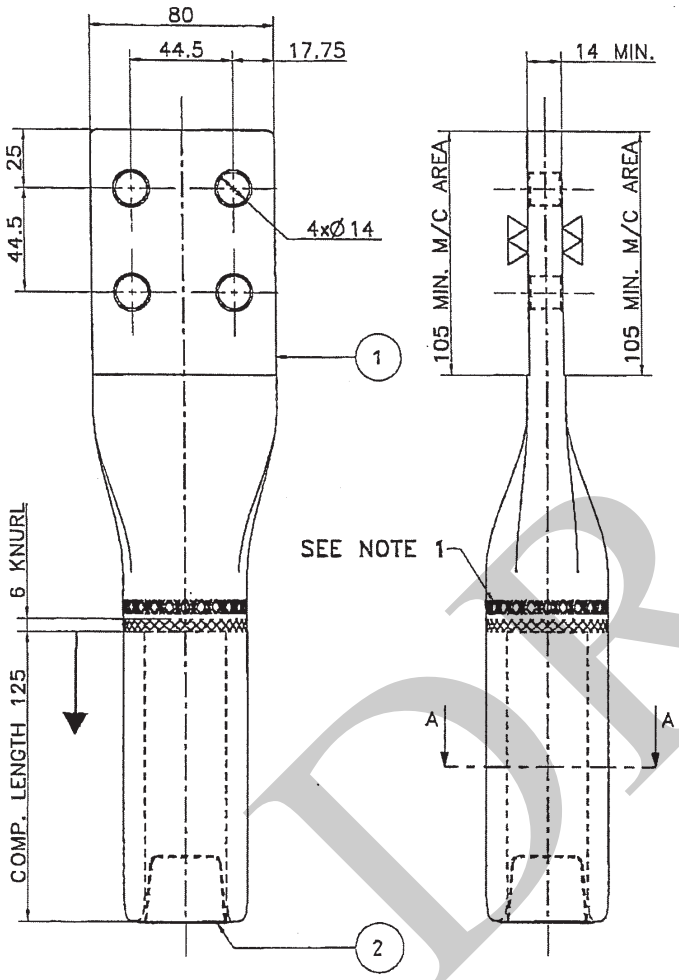

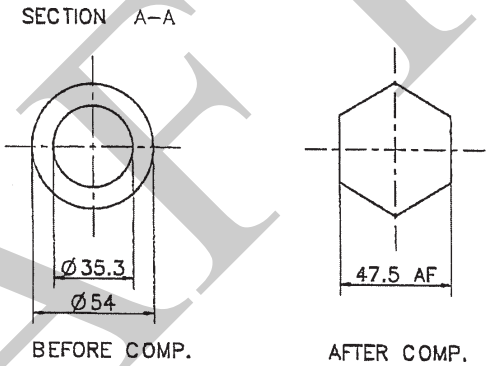

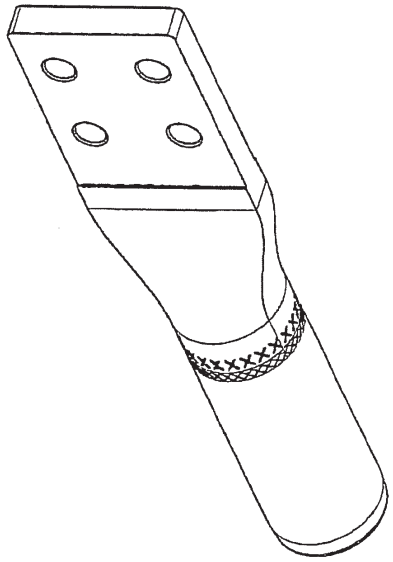

3D VIEW

NOTES:

1. MARKED : JT1272-2MC
   47.5 A/F
   PLPTH
   MONTH/YEAR OF MANUFACTURE
2. MIN. UTS. OF JUMPER TERMINAL SHALL BE NOT LESS THAN 30% OF UTS. OF CONDUCTOR.
3. SLEEVE SHALL BE FACTORY PRE FILLED WITH OXIDE INHIBITING COMPOUND AND SEALED.
4. CONTINOUS AMPACITY 1,000 AMP AT 65 °C AND 75 °C CONTINUOUS AMPACITY = 1,125 AMP

ITEM	REFERENCE	QTY	DESIGNATION	MATERIAL
2	CAP_35_3	1	PLASTIC CAP	PLASTIC
1	SD200337	1	BODY	ALUMINIUM GRADE 1050 T1

THIS DRAWING IS A CONTROLLED DOCUMENT. IT IS SUBJECT TO CHANGE AND THE CONTROLLING ENGINEERING ORGANIZATION SHOULD BE CONTACTED FOR THE LATEST REVISION.

TOLERANCES UNLESS OTHERWISE SPECIFIED PER
Dims ≤35mm: .....±0.7mm
Dims >35mm: ..... ±2%

DIMENSIONS MILLIMETERS
PIP CODE 630928-000
APPLICATION SPEC -
PRODUCT SPEC. -
MATERIAL -
FINISH -
CUSTOMER DRAWING FOR REFERENCE ONLY

DRAWN USANEE DATE 5/10/10
CHECKED DATE
APPROVED DATE 14/10/10
WEIGHT 1.3 KG.
CAGE CODE 00***
SCALE NTS.
SHEET 1 OF 1

PREFORMED LINE PRODUCTS

NAME
JUMPER TERMINAL STRAIGHT
1272MCM ACSR
STRANDING 42/4.42+7/2.46

SIZE A4
DRAWING NUMBER A4DD17829T
REV 1

DRAFT

THIS DRAWING IS UNPUBLISHED. RELEASED FOR PUBLICATION
© COPYRIGHT 20 ALL RIGHTS RESERVED.

Contract No. S100074-0228Q-TS11-THPPE-CH-01
Item : A1-5, B1-4
Legend No : 17.43

REVISIONS					
P	LTR	DESCRIPTION	DATE	DWN	APVD
	5	EA 10407	11/10/10	UC	CC
	-	-	-	-	-

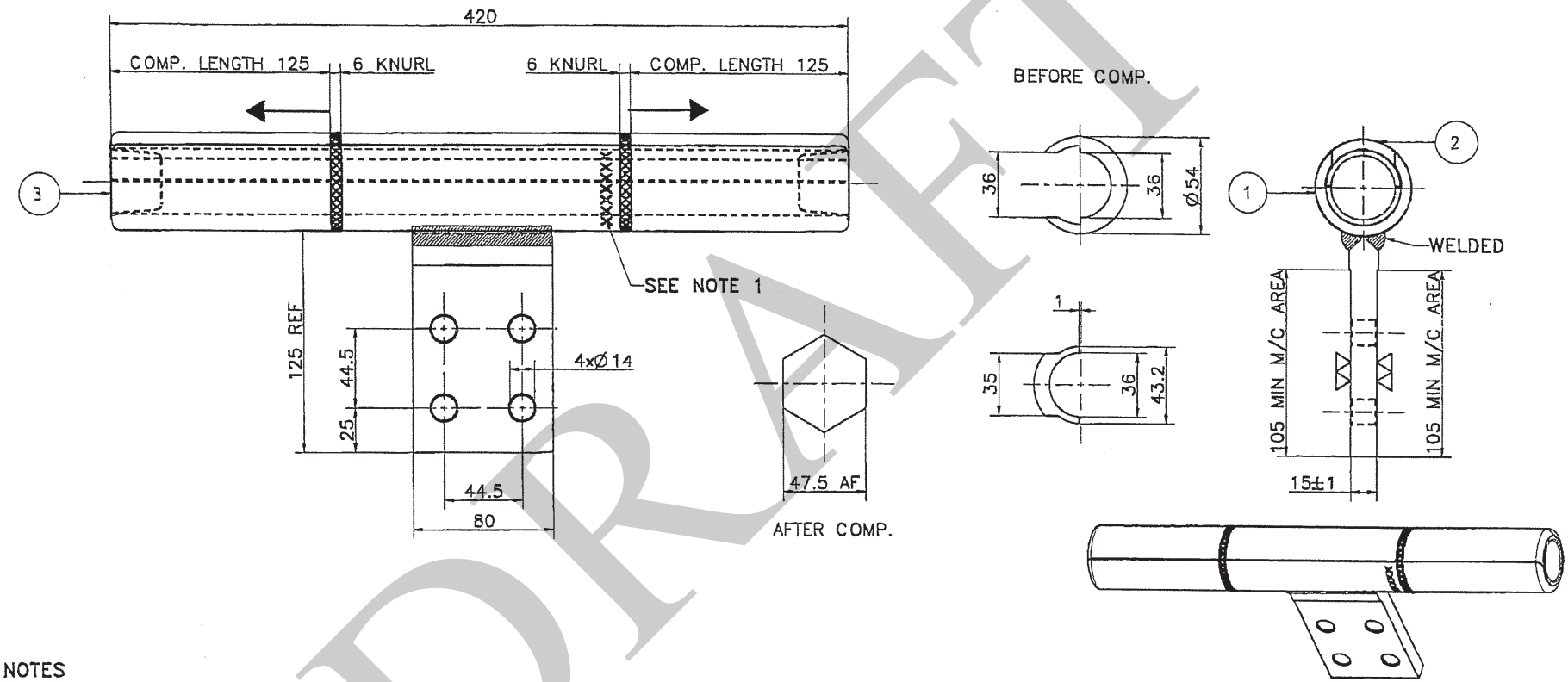

NOTES
1. MARKED : CTC1272
PLPTH
47.5 A/F
MONTH/YEAR OF MANUFACTURE
2. OXIDE INHIBITING COMPOUND SHALL BE SUPPIED AND CLOSED WITH A PLASTIC CAP AT BOTH ENDS.

ITEM	REFERENCE	QTY	DESIGNATION	MATERIAL
3	CAP_36	2	PLASTIC CAP	PLASTIC
2	16883T-K	1	KEEPER	ALUMINIUM GRADE 1050T1
1	16883T-B	1	COMP TEE CONNECTOR	ALUMINIUM GRADE 1050T1

THIS DRAWING IS A CONTROLLED DOCUMENT. IT IS SUBJECT TO CHANGE AND THE CONTROLLING ENGINEERING ORGANIZATION SHOULD BE CONTACTED FOR THE LATEST REVISION.

TOLERANCES UNLESS OTHERWISE SPECIFIED PER
Dims ≤35mm: .....±0.7mm
Dims >35mm:..... ±2%

DIMENSIONS MILLIMETERS
PIP CODE 958538-000
APPLICATION SPEC –
PRODUCT SPEC. –
MATERIAL –
FINISH –
CUSTOMER DRAWING FOR REFERENCE ONLY

DRAWN SUNCHAI DATE 15/10/08
CHECKED DATE
APPROVED DATE 19/10/10
WEIGHT 1.8 KG.
CAGE CODE 00***
SCALE NTS
SHEET 1 OF 1

PREFORMED LINE PRODUCTS

NAME
COMP. TEE CONNECTOR
1272 MCM ACSR
STRANDING 42/4.42+7/2.46

SIZE A4
DRAWING NUMBER A4DD16883T
REV 5

DRAFT

THIS DRAWING IS UNPUBLISHED. RELEASED FOR PUBLICATION
© COPYRIGHT 20 ALL RIGHTS RESERVED.

LOC	DI

REVISIONS

P	LTR	DESCRIPTION	DATE	DWN	APVD
	4	EA 10386	6/10/10	UC	CC
	-	-	-	-	-

Contract No. S100074-0228Q-TS11-THPPE-CH-01

Item : A1-8, B1-6

Legend No : 24.15

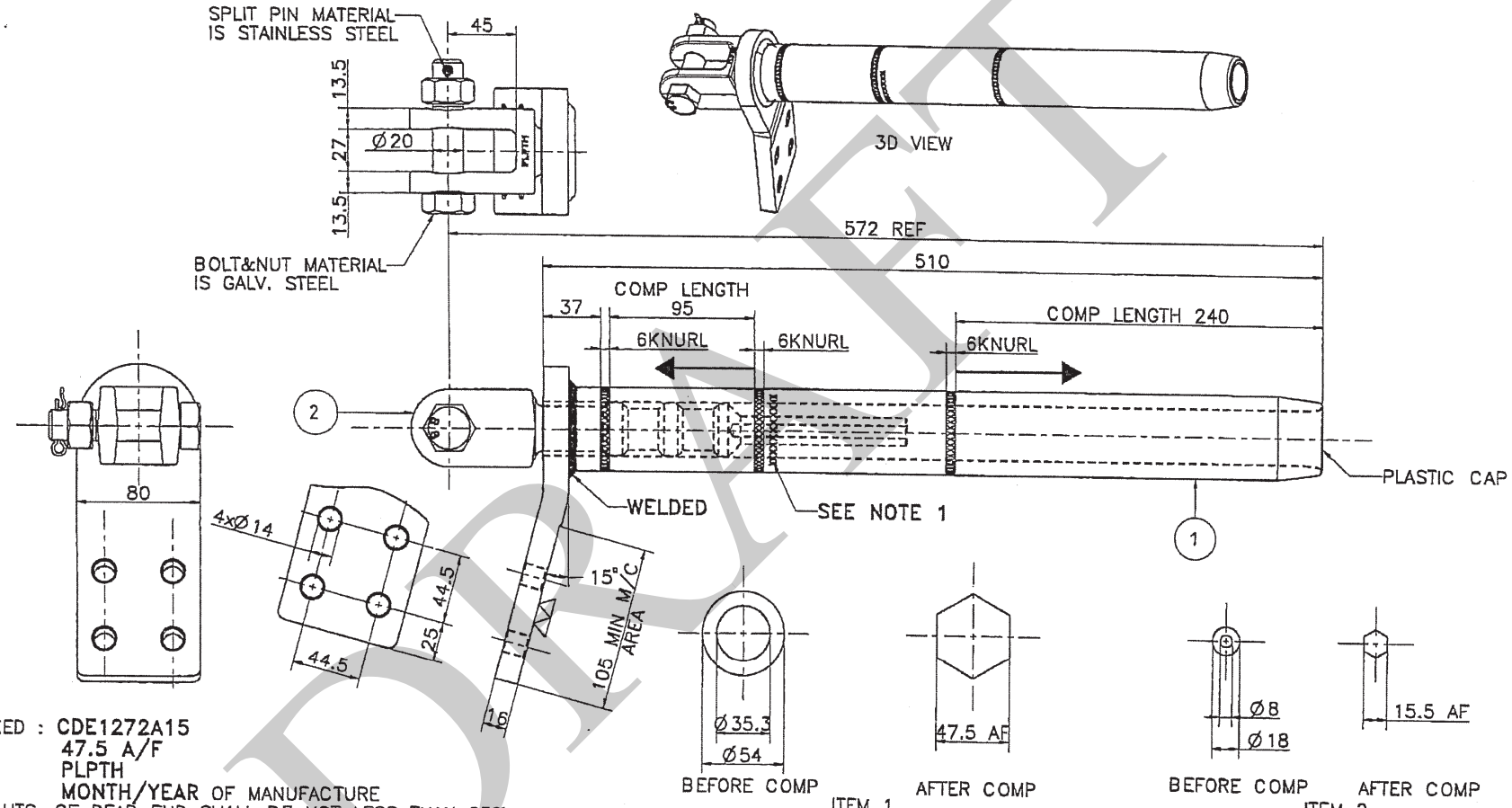

ITEM 1

ITEM 2

NOTES

1. MARKED : CDE1272A15
   47.5 A/F
   PLPTH
   MONTH/YEAR OF MANUFACTURE
2. MIN. UTS. OF DEAD END SHALL BE NOT LESS THAN 95% OF UTS OF CONDUCTOR
3. SLEEVE SHALL BE FACTORY PRE FILLED WITH OXIDE INHIBTING COMPOUND AND SEALED
4. ALL FERROUS METAL PARTS SHALL BE HOT-DIP GALVANIZED IN ACCORDANCE WITH ASTM A153.

ITEM	REFERENCE	QTY	DESIGNATION	MATERIAL
2	SD300108	1	CLEVIS TAIL ASSEMBLY M20	GALV. FORGED STEEL+STAINLESS STEEL
1	SD100123	1	COMP DEAD END	ALUMINIUM GRADE 1050 T1

THIS DRAWING IS A CONTROLLED DOCUMENT. IT IS SUBJECT TO CHANGE AND THE CONTROLLING ENGINEERING ORGANIZATION SHOULD BE CONTACTED FOR THE LATEST REVISION.

TOLERANCES UNLESS OTHERWISE SPECIFIED PER
Dims ≤35mm: ....±0.7mm
Dims >35mm: ..... ±2%

DIMENSIONS MILLIMETERS

PIP CODE CG9881-000

APPLICATION SPEC –

PRODUCT SPEC. –

MATERIAL –

FINISH –

CUSTOMER DRAWING FOR REFERENCE ONLY

DRAWN CHANCHIT DATE 03/07/07

CHECKED DATE

APPROVED DATE 14/10/10

WEIGHT 4.3 KG.

CAGE CODE 00***

SCALE NTS.

SHEET 1 OF 1

PREFORMED LINE PRODUCTS

NAME
CLEVIS COMP. DEAD END
1272MCM ACSR
STRANDING 42/4.42+7/2.46

SIZE A4

DRAWING NUMBER A4DD16227T

REV 4

DRAFT

THIS DRAWING IS UNPUBLISHED. RELEASED FOR PUBLICATION
© COPYRIGHT 20 ALL RIGHTS RESERVED.

LOC	DI

REVISIONS

P	LTR	DESCRIPTION	DATE	DWN	APVD
	12	EA 10373	6/10/10	UC	CC
	-	-	-	-	-

Contract No. S100074-0228Q-TS11-THPPE-CH-01
Item : A1-31, B1-20
Legend No : 46.61

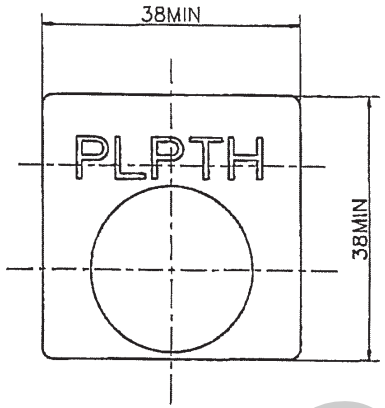

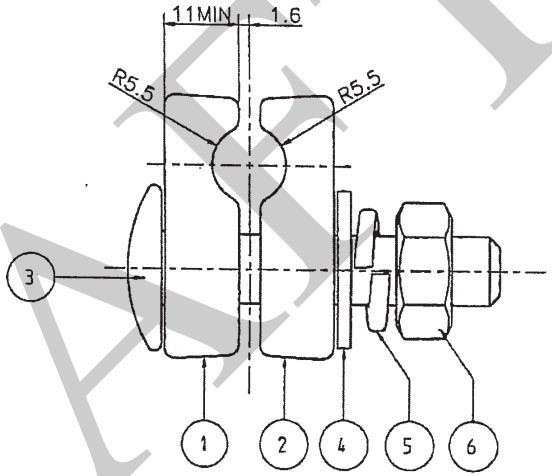

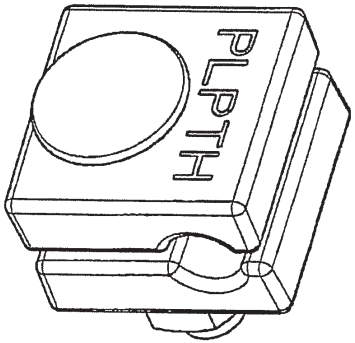

3D VIEW

NOTES
1. MARKED : SGC 3/8
PLPTH
SUPPLIER IDENTIFICATION
MONTH/YEAR OF MANUFACTURE
2. BOLT & NUT TIGHTENING TORQUE = 21 Nm.
3. ALL FERROUS METAL SHALL BE HOT-DIP GALVANIZED IN ACCORDANCE WITH ASTM A153.

ITEM	REFERENCE	QTY	DESIGNATION	MATERIAL
6	SD500000_M10	1	HEX. NUT M10	GALV. STEEL GRADE 8
5	SD500025	1	SPRING WASHER M10	GALV. STEEL SPRING
4	SD500113	1	FLAT WASHER LARGE SERIES M10	GALV. STEEL
3	SD030014	1	ROUND HEAD SQ. NECK BOLT M10x50-25	GALV. STEEL
2	SD750750	1	KEEPER	GALV. DUCTILE IRON
1	SD750273	1	BODY	GALV. DUCTILE IRON

THIS DRAWING IS A CONTROLLED DOCUMENT. IT IS SUBJECT TO CHANGE AND THE CONTROLLING ENGINEERING ORGANIZATION SHOULD BE CONTACTED FOR THE LATEST REVISION.

TOLERANCES UNLESS OTHERWISE SPECIFIED PER
Dims ≤35mm: .....±0.7mm
Dims >35mm: ..... ±2%

DIMENSIONS MILLIMETERS
PIP CODE 515292-000
APPLICATION SPEC –
PRODUCT SPEC. –
MATERIAL –
FINISH GALV.
CUSTOMER DRAWING FOR REFERENCE ONLY

DRAWN W.K. DATE 11/12/97
CHECKED DATE
APPROVED DATE 14/10/10
WEIGHT 0.3 KG.
CAGE CODE 00***
SCALE NTS.
SHEET 1 OF 1

PREFORMED LINE PRODUCTS

NAME
SINGLE GROOVE CLAMP
CONDUCTOR RANGE
Ø8.8 –Ø10.8MM

SIZE A4
DRAWING NUMBER A4DD3792T
REV 12

DRAFT

THIS DRAWING IS UNPUBLISHED. RELEASED FOR PUBLICATION
© COPYRIGHT 20 ALL RIGHTS RESERVED.

Contract No. S100074-0228Q-TS11-THPPE-CH-01
Item : A1-11, B1-8
Legend No : 80.01

REVISIONS					
P	LTR	DESCRIPTION	DATE	DWN	APVD
	7	EA 10359	5/10/10	UC	CC
	8	EA 11324	28/03/11	UC	CC

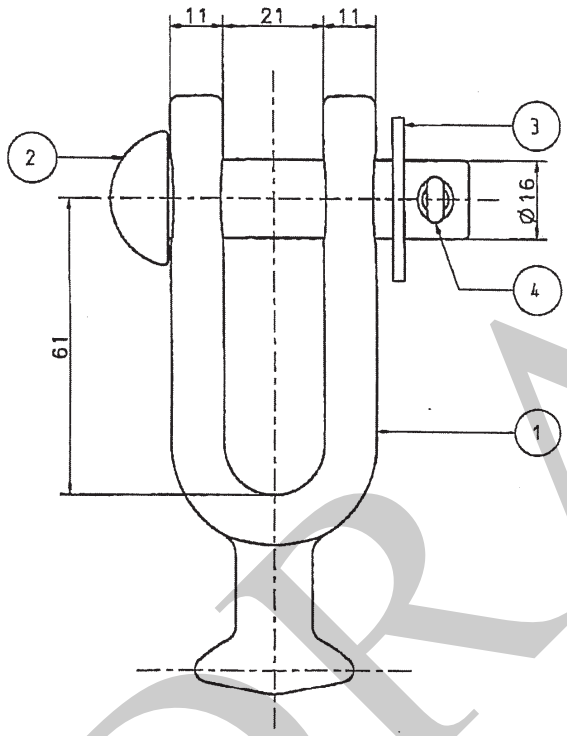

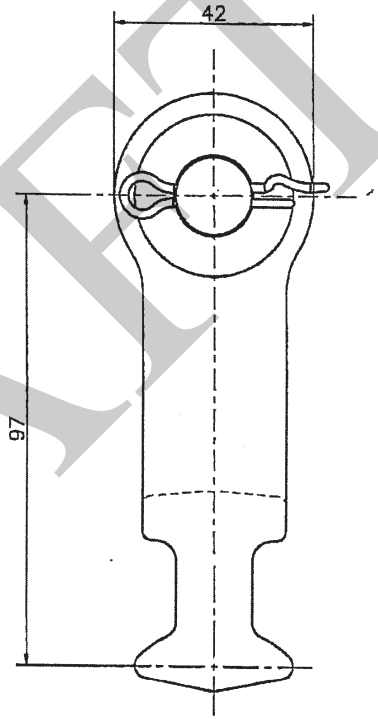

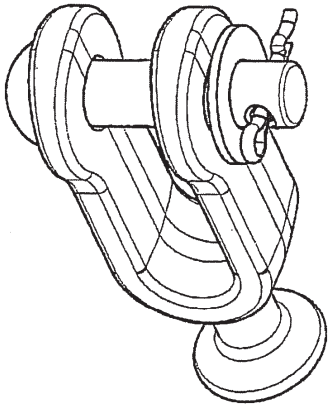

3D VIEW

NOTES
1. MARKED : BC82
PLPTH
SUPPLIER IDENTIFICATION
MONTH/YEAR OF MANUFACTURE
2. BALL & SHANK DIMENSIONS ARE ACCORDANDING TO ANSI C29.2–1992 CLASS 52–3 (TYPE B)
3. MIN. UTS. 120 KN. (12,300 KG.)
4. ALL FERROUS METAL SHALL BE HOT–DIP GALVANIZED IN ACCORDANCE WITH ASTM A153.

ITEM	REFERENCE	QTY	DESIGNATION	MATERIAL
4	SD500013	1	SPLIT PIN	STAINLESS STEEL
3	SD500011	1	PLAIN WASHER Ø16mm	GALV. STEEL
2	SD095003	1	RIVET Ø16mm. LENGTH 63mm	GALV. STEEL
1	SD750367	1	BODY	GALV. FORGED STEEL

THIS DRAWING IS A CONTROLLED DOCUMENT. IT IS SUBJECT TO CHANGE AND THE CONTROLLING ENGINEERING ORGANIZATION SHOULD BE CONTACTED FOR THE LATEST REVISION.

TOLERANCES UNLESS OTHERWISE SPECIFIED PER
Dims ≤35mm: .....±0.7mm
Dims >35mm:..... ±2%

DIMENSIONS MILLIMETERS
PIP CODE 434644–000
APPLICATION SPEC –
PRODUCT SPEC. –
MATERIAL –
FINISH –
CUSTOMER DRAWING FOR REFERENCE ONLY

DRAWN USANEE DATE 10/06/99
CHECKED DATE
APPROVED DATE 28/3/11
WEIGHT 0.7 KG.
CAGE CODE 00***
SCALE NTS.
SHEET 1 OF 1

PREFORMED LINE PRODUCTS

NAME
16MM
BALL CLEVIS

SIZE A4
DRAWING NUMBER A4DD08248T
REV 8

DRAFT

THIS DRAWING IS UNPUBLISHED. RELEASED FOR PUBLICATION
© COPYRIGHT 20 ALL RIGHTS RESERVED.

Contract No. S100074-0228Q-TS11-THPPE-CH-01
Item : A1-12, B1-9
Legend No : 80.06

REVISIONS					
P	LTR	DESCRIPTION	DATE	DWN	APVD
	10	EA 9418	8/06/10	UC	CC
	11	EA 10358	5/10/10	UC	CC

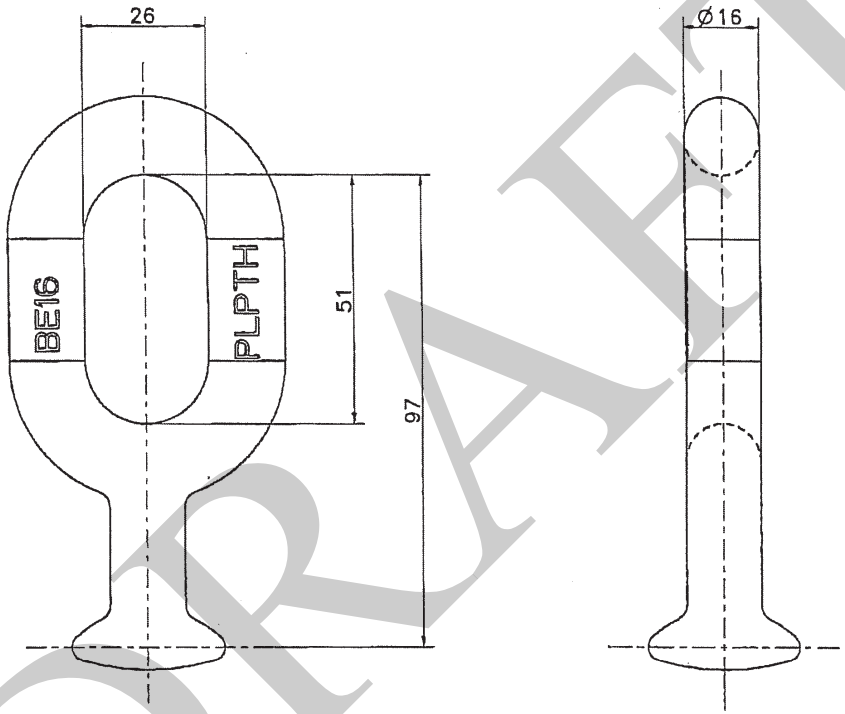

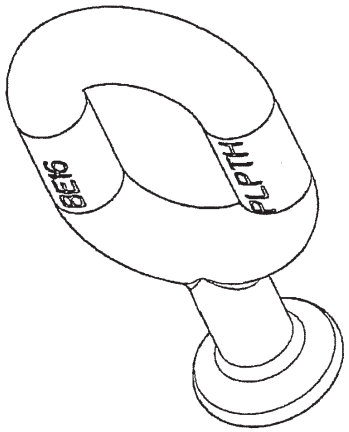

3D VIEW

NOTES
1. MARKED : BE16
120KN
PLPTH
SUPPLIER IDENTIFICATION
MONTH/YEAR OF MANUFACTURE
2. MIN. UTS. 120 KN. (12,300 KG)
3. BALL & SHANK DIMENSIONS ARE AS PER C29.2-1992 CLASS 52-3 (TYPE B)
4. ALL FERROUS METAL SHALL BE HOT-DIP GALVANIZED IN ACCORDANCE WITH ASTM A153.

ITEM	REFERENCE	QTY	DESIGNATION	MATERIAL
1	SD750268	1	BODY	GALV. FORGED STEEL

THIS DRAWING IS A CONTROLLED DOCUMENT. IT IS SUBJECT TO CHANGE AND THE CONTROLLING ENGINEERING ORGANIZATION SHOULD BE CONTACTED FOR THE LATEST REVISION.

TOLERANCES UNLESS OTHERWISE SPECIFIED PER
Dims ≤35mm: ....±0.7mm
Dims >35mm:..... ±2%

DIMENSIONS MILLIMETERS
PIP CODE 396354-000
APPLICATION SPEC –
PRODUCT SPEC. –
MATERIAL –
FINISH GALV.
CUSTOMER DRAWING FOR REFERENCE ONLY

DRAWN USANEE DATE 31/07/98
CHECKED DATE
APPROVED DATE 14/10/10
WEIGHT 0.5 KG.
CAGE CODE 00***
SCALE NTS.
SHEET 1 OF 1

PREFORMED LINE PRODUCTS

NAME
16MM
BALL EYE LINK

SIZE A4
DRAWING NUMBER A4DD1114T
REV 11

DRAFT

THIS DRAWING IS UNPUBLISHED. RELEASED FOR PUBLICATION
© COPYRIGHT 20 ALL RIGHTS RESERVED.

Contract No. S100074-0228Q-TS11-THPPE-CH-01
Item : A1-13, B1-10
Legend No : 80.11

LOC	DIST

REVISIONS

P	LTR	DESCRIPTION	DATE	DWN	APVD
	5	EA 5523 DELETED OR ISO1461.	31/JAN/08	UC	MB
	6	EA 9835	11/07/10	DT	CC

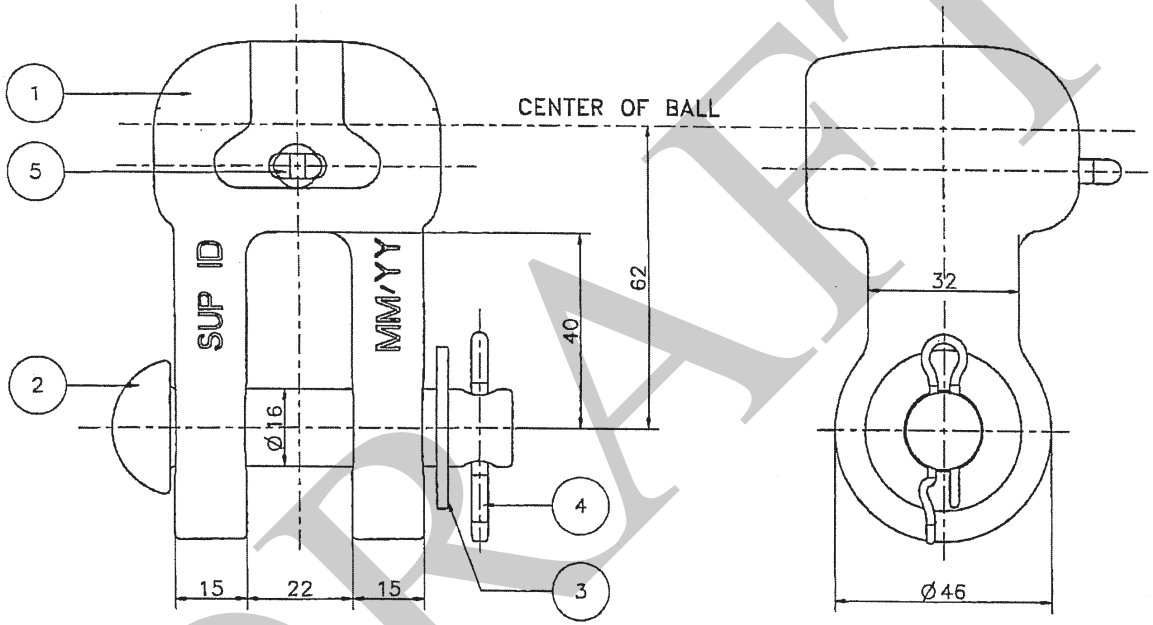

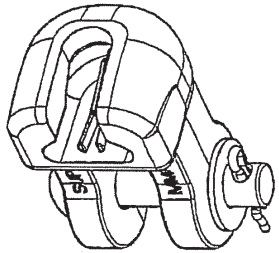

3D VIEW

NOTES
1. MARKED : SC137
PLPTH
SUPPLIER IDENTIFICATION
MONTH/YEAR OF MANUFACTURE
2. SOCKET DIMENSIONS ARE AS PER ANSI C 29.2-1992 CLASS 52-3 (TYPE B)
3. MIN. UTS. 137 KN. (14,000 KG.)
4. ALL FERROUS METAL SHALL BE HOT-DIP GALVANIZED IN ACCORDANCE WITH ASTM A 153.

ITEM	REFERENCE	QTY	DESIGNATION	MATERIAL
5	SD500056	1	SECURITY CLIP	STAINLESS STEEL
4	SD500013	1	SPLIT PIN	STAINLESS STEEL
3	SD500011	1	FLAT WASHER Ø16mm	GALV. STEEL
2	SD095004	1	RIVET Ø16mm. LENGTH 72mm	GALV. STEEL
1	SD750269	1	BODY	GALV. DUCTILE IRON

THIS DRAWING IS A CONTROLLED DOCUMENT. IT IS SUBJECT TO CHANGE AND THE CONTROLLING ENGINEERING ORGANIZATION SHOULD BE CONTACTED FOR THE LATEST REVISION.

TOLERANCES UNLESS OTHERWISE SPECIFIED PER
Dims ≤35mm: ....±0.7mm
Dims >35mm: ..... ±2%

DIMENSIONS MILLIMETERS
PIP CODE 256780-000
APPLICATION SPEC –
PRODUCT SPEC. –
MATERIAL –
FINISH –
CUSTOMER DRAWING FOR REFERENCE ONLY

DRAWN USANEE DATE 10/09/01
CHECKED DATE Jul 13,10
APPROVED DATE 13/09/10
WEIGHT 1.2 KG.
CAGE CODE 00***
SCALE NTS.
SHEET 1 OF 1

PREFORMED LINE PRODUCTS

NAME
16mm
SOCKET CLEVIS

SIZE A4
DRAWING NUMBER A4DD10476T
REV 6

DRAFT

THIS DRAWING IS UNPUBLISHED. RELEASED FOR PUBLICATION
© COPYRIGHT 20 ALL RIGHTS RESERVED.

Contract No. S100074-0228Q-TS11-THPPE-CH-01
Item : A1-14, B1-11
Legend No : 80.16

LOC	DIS

REVISIONS

P	LTR	DESCRIPTION	DATE	DWN	APVD
	3	EA 11044	31/01/11	UC	CC
	-	-	-	-	-

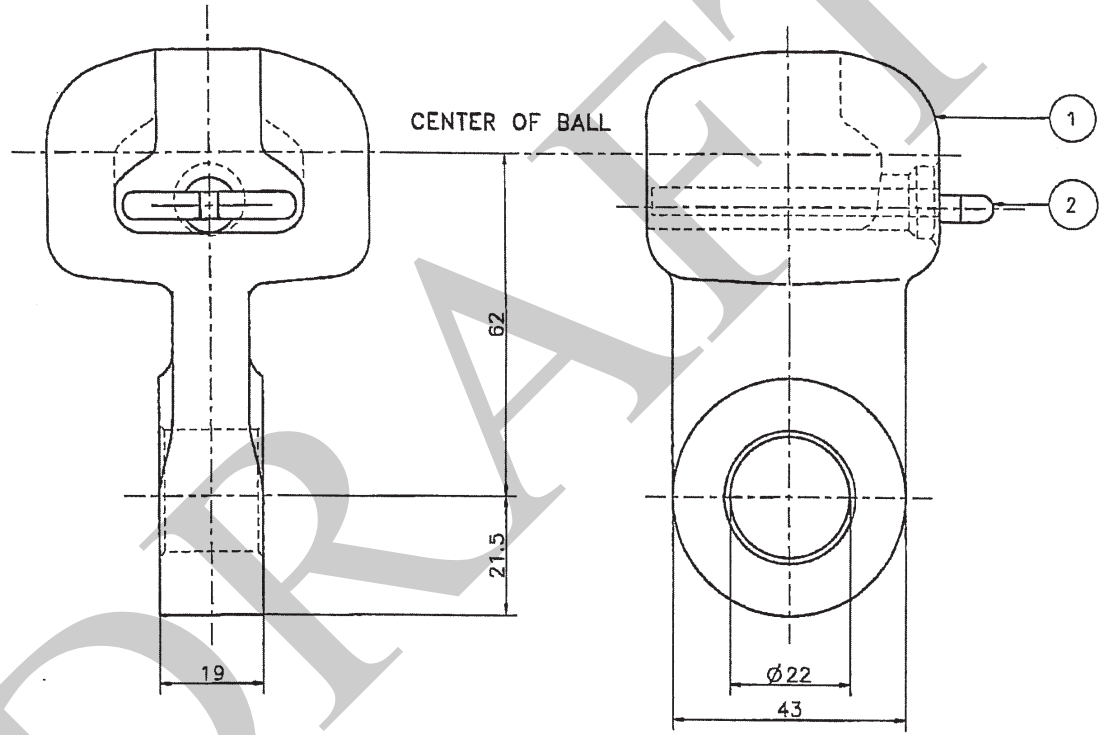

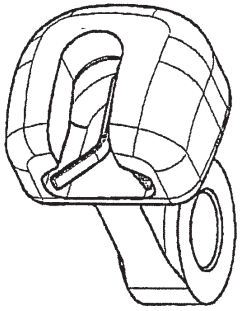

3D VIEW

NOTES
1. MARKED : 80KN
PLPTH
SUPPLIER IDENTIFICATION
MONTH/YEAR OF MANUFACTURE
2. SOCKET DIMENSIONS ARE AS PER ANSI C 29.2-1992 CLASS 52-3 (INSULATOR TYPE B)
3. MIN. UTS. 80 KN. (8,200 KG.)
4. ALL FERROUS METAL SHALL BE HOT-DIP GALVANIZED IN ACCORDANCE WITH ASTM A 153

ITEM	REFERENCE	QTY	DESIGNATION	MATERIAL
2	SD500056	1	SECURITY CLIP	STAINLESS STEEL
1	SD751139	1	BODY	GALV. DUCTILE IRON

THIS DRAWING IS A CONTROLLED DOCUMENT. IT IS SUBJECT TO CHANGE AND THE CONTROLLING ENGINEERING ORGANIZATION SHOULD BE CONTACTED FOR THE LATEST REVISION.

TOLERANCES UNLESS OTHERWISE SPECIFIED PER
Dims ≤35mm: ....±0.7mm
Dims >35mm: .... ±2%

DIMENSIONS MILLIMETERS
PIP CODE 956568-000
APPLICATION SPEC -
PRODUCT SPEC. -
MATERIAL -
FINISH -
CUSTOMER DRAWING FOR REFERENCE ONLY

DRAWN USANEE DATE 8/10/10
CHECKED DATE Jan 31, 11
APPROVED DATE 31/1/11
WEIGHT 1.0 KG.
CAGE CODE 00***
SCALE NTS.
SHEET 1 OF 1

PREFORMED LINE PRODUCTS

NAME
16MM SOCKET EYE WITH 19MM BOSS

SIZE A4
DRAWING NUMBER A4DD17834T
REV 3

DRAFT

THIS DRAWING IS UNPUBLISHED. RELEASED FOR PUBLICATION
(C) COPYRIGHT 20 ALL RIGHTS RESERVED.

Contract No. S100074-0228Q-TS11-THPPE-CH-01
Item : A1-15, B1-12
Legend No : 80.17

REVISIONS					
P	LTR	DESCRIPTION	DATE	DWN	APVD
	3	EA 11044	31/01/11	UC	CC
	-	-	-	-	-

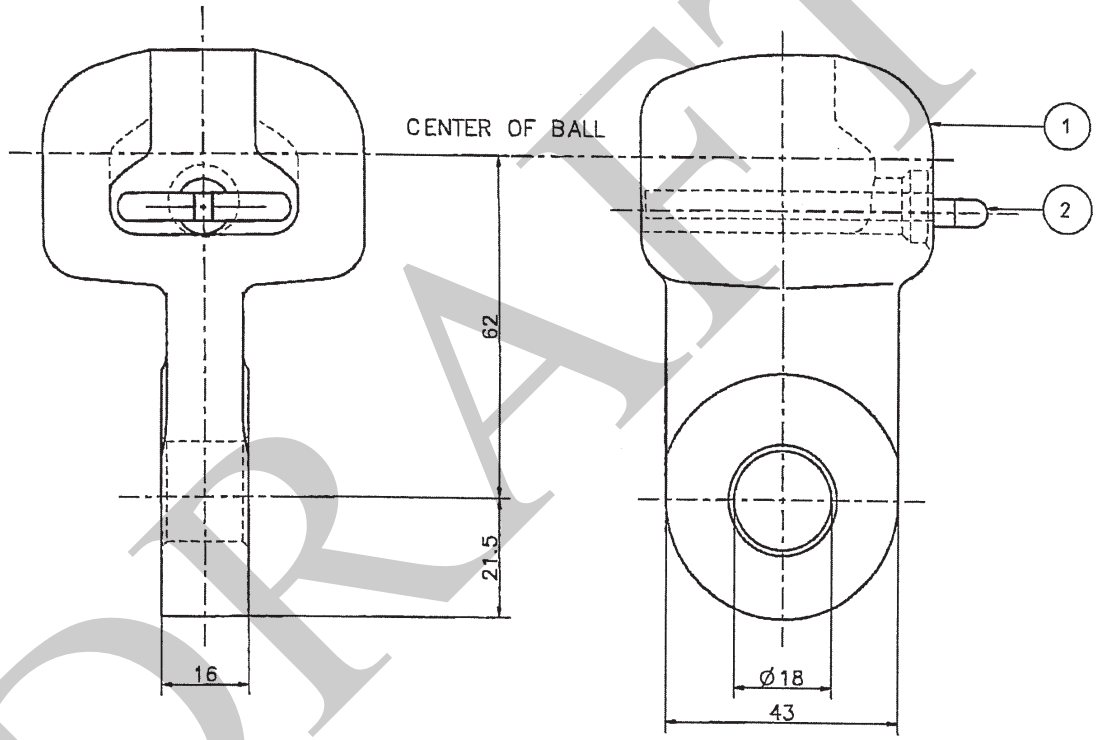

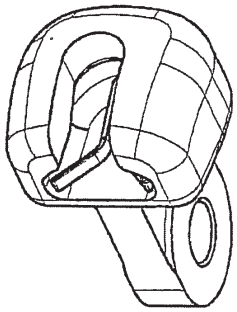

3D VIEW

NOTES
1. MARKED : 80KN
PLPTH
SUPPLIER IDENTIFICATION
MONTH/YEAR OF MANUFACTURE
2. SOCKET DIMENSIONS ARE AS PER ANSI C 29.2-1992 CLASS 52-3 (INSULATOR TYPE B)
3. MIN. UTS. 80 KN. (8,200 KG.)
4. ALL FERROUS METAL SHALL BE HOT-DIP GALVANIZED IN ACCORDANCE WITH ASTM A 153

ITEM	REFERENCE	QTY	DESIGNATION	MATERIAL
2	SD500056	1	SECURITY CLIP	STAINLESS STEEL
1	SD751140	1	BODY	GALV. DUCTILE IRON

THIS DRAWING IS A CONTROLLED DOCUMENT. IT IS SUBJECT TO CHANGE AND THE CONTROLLING ENGINEERING ORGANIZATION SHOULD BE CONTACTED FOR THE LATEST REVISION.

TOLERANCES UNLESS OTHERWISE SPECIFIED PER
Dims ≤35mm: ....±0.7mm
Dims >35mm:..... ±2%

DIMENSIONS MILLIMETERS
PIP CODE 800264-000
APPLICATION SPEC -
PRODUCT SPEC. -
MATERIAL -
FINISH -
CUSTOMER DRAWING FOR REFERENCE ONLY

DRAWN USANEE DATE 8/10/10
CHECKED DATE Jan 31 11
APPROVED DATE 31/1/11
WEIGHT 0.9 KG.
CAGE CODE 00***
SCALE NTS.
SHEET 1 OF 1

PREFORMED LINE PRODUCTS

NAME
16MM SOCKET EYE WITH 16MM BOSS

SIZE A4
DRAWING NUMBER A4DD17835T
REV 3

DRAFT

THIS DRAWING IS UNPUBLISHED. RELEASED FOR PUBLICATION
© COPYRIGHT 20 ALL RIGHTS RESERVED.

LOC	DIS.

REVISIONS

P	LTR	DESCRIPTION	DATE	DWN	APVD
	1	EA 10402	8/10/10	UC	CC
	-	-	-	-	-

Contract No. S100074-0228Q-TS11-THPPE-CH-01
Item : A1-16, B1-13
Legend No : 80.23

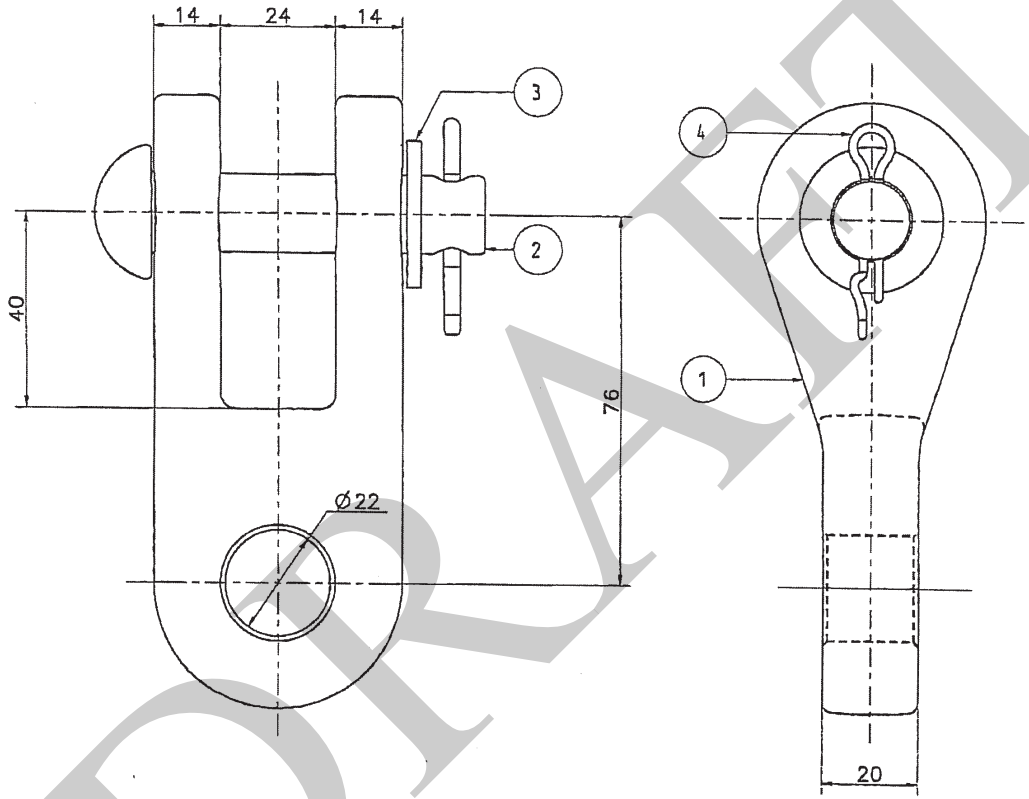

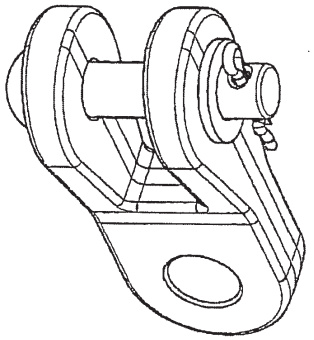

3D VIEW

NOTES
1. MARKED : TCT130
PLPTH
SUPPLIER IDENTIFICATION
MONTH/YEAR OF MANUFACTURE
2. MIN. UTS. 130KN (13,300KG)
3. ALL FERROUS METAL SHALL BE HOT-DIP GALVANIZED IN ACCORDANCE WITH ASTM A153.

ITEM	REFERENCE	QTY	DESIGNATION	MATERIAL
4	SD500013	1	SPLIT PIN	STAINLESS STEEL
3	SD500006	1	PLAIN WASHER M16	GALV. STEEL
2	SD095037	1	RIVET Ø16mm. LENGTH 70mm	GALV. STEEL
1	SD751128	1	BODY	GALV. DUCTILE IRON

THIS DRAWING IS A CONTROLLED DOCUMENT. IT IS SUBJECT TO CHANGE AND THE CONTROLLING ENGINEERING ORGANIZATION SHOULD BE CONTACTED FOR THE LATEST REVISION.

TOLERANCES UNLESS OTHERWISE SPECIFIED PER
Dims ≤35mm: ....±0.7mm
Dims >35mm: ..... ±2%

DIMENSIONS MILLIMETERS
APPLICATION SPEC –
MATERIAL –
CUSTOMER DRAWING FOR REFERENCE ONLY

PIP CODE 739908-000
PRODUCT SPEC. –
FINISH –

DRAWN USANEE DATE 8/10/10
CHECKED DATE
APPROVED DATE 14/10/10
WEIGHT 1.0 KG.
CAGE CODE 00***
SCALE NTS
SHEET 1 OF 1

PREFORMED LINE PRODUCTS

NAME
TWISTED CLEVIS TONGUE
20MM BOSS

SIZE A4
DRAWING NUMBER A4DD17798T
REV 1

DRAFT

THIS DRAWING IS UNPUBLISHED. RELEASED FOR PUBLICATION
© COPYRIGHT 20 ALL RIGHTS RESERVED.

LOC	DIS

REVISIONS

P	LTR	DESCRIPTION	DATE	DWN	APVD
	5	EA 9416	8/06/10	UC	CC
	6	EA 10372	6/10/10	UC	CC

Contract No. S100074-0228Q-TS11-THPPE-CH-01
Item : A1-18, B1-14
Legend No : 80.31

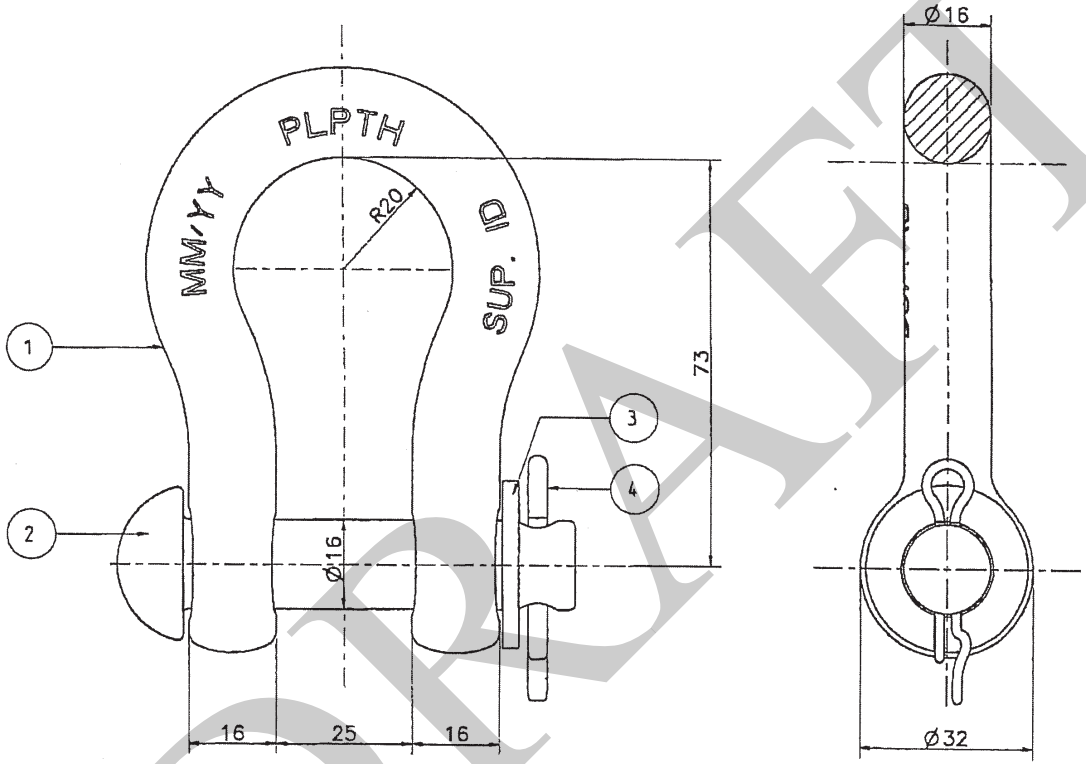

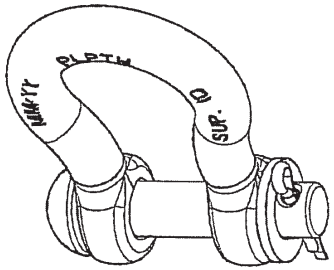

3D VIEW

NOTES
1. MARKED : BS120
PLPTH
SUPPLIER IDENTIFICATION
MONTH/YEAR OF MANUFACTURE
2. MIN. UTS. 120 KN. (12,300 KG.)
3. ALL FERROUS METAL SHALL BE HOT-DIP GALVANIZED IN ACCORDANCE WITH ASTM A153.

ITEM	REFERENCE	QTY	DESIGNATION	MATERIAL
4	SD500013	1	SPLIT PIN	STAINLESS STEEL
3	SD500006	1	PLAIN WASHER M16	GALV. STEEL
2	SD095004	1	RIVET Ø16mm. LENGTH 72mm	GALV. STEEL
1	SD750059	1	BODY	GALV. FORGED STEEL

THIS DRAWING IS A CONTROLLED DOCUMENT. IT IS SUBJECT TO CHANGE AND THE CONTROLLING ENGINEERING ORGANIZATION SHOULD BE CONTACTED FOR THE LATEST REVISION.

TOLERANCES UNLESS OTHERWISE SPECIFIED PER
Dims ≤35mm: ....±0.7mm
Dims >35mm: .... ±2%

DIMENSIONS MILLIMETERS
APPLICATION SPEC –
MATERIAL –
PIP CODE 808048-000
PRODUCT SPEC. –
FINISH GALV.
CUSTOMER DRAWING FOR REFERENCE ONLY

DRAWN CHANCHIT DATE 28/08/03
CHECKED DATE
APPROVED DATE 14/10/10
WEIGHT 0.6 KG.
CAGE CODE 00***
SCALE NTS.
SHEET 1 OF 1

PREFORMED LINE PRODUCTS

NAME
16MM
BOW SHACKLE

SIZE A4
DRAWING NUMBER A4DD14164T
REV 6

DRAFT

THIS DRAWING IS UNPUBLISHED. RELEASED FOR PUBLICATION
© COPYRIGHT 20 ALL RIGHTS RESERVED.

LOC	DIL.

REVISIONS

P	LTR	DESCRIPTION	DATE	DWN	APVD
	4	EA 11254	18/03/11	DT	CC
	-	-	-	-	-

Contract No. S100074-0228Q-TS11-THPPE-CH-01

Item : A1-19, B1-15

Legend No : 80.36

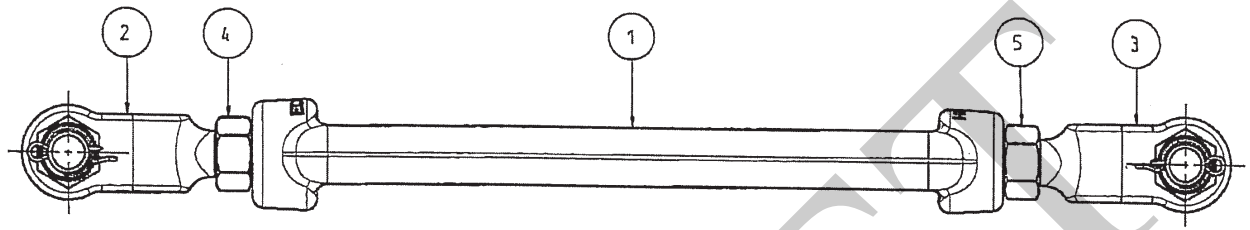

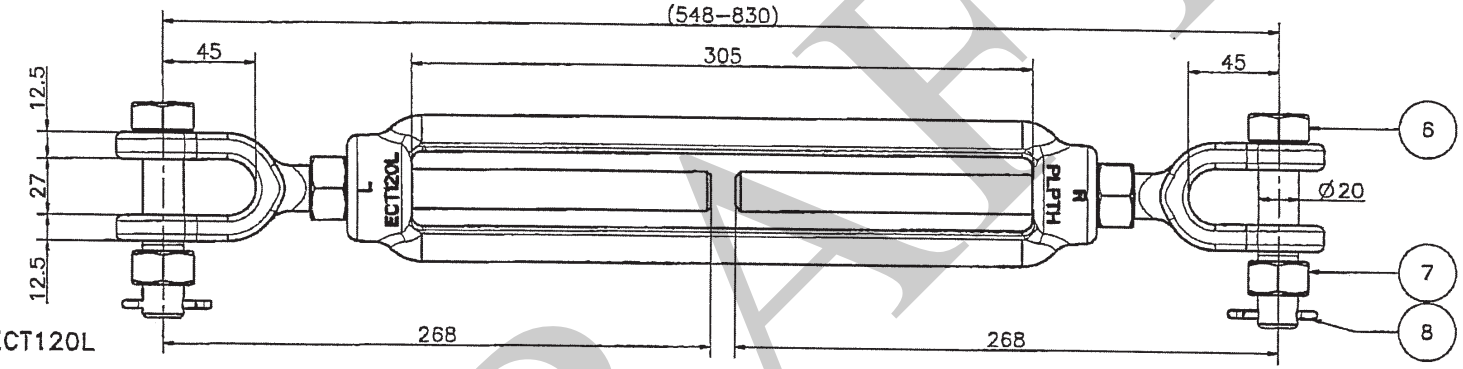

NOTES

1. MARKED : ECT120L
   L
   R
   PLPTH
   SUPPLIER IDENTIFICATION
   MONTH/YEAR OF MANUFACTURE
2. MIN. UTS. 120 KN. (12,300 KG)
3. ALL FERROUS METAL PARTS SHALL BE HOT–DIP GALVANIZED IN ACCORDANCE WITH ASTM A 153.
4. BOLTS THREADS TO EXTEND APPROX. 10 mm OUTSIDE AFTER INSTALLATION

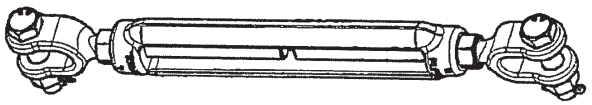

3D VIEW

ITEM	REFERENCE	QTY	DESIGNATION	MATERIAL
8	SD500013	2	SPLIT PIN	STAINLESS STEEL
7	SD500000_M20	2	HEX. NUT M20	GALV. STEEL GRADE 8
6	SD000182	2	HEX. BOLT M20-90-35 DRILL Ø5.5	GALV. STEEL GRADE 8.8
5	SD500001_34	1	HEX. NUT 3/4" RIGHT HAND THREAD	GALV. STEEL GRADE 8
4	SD500022_34	1	HEX. NUT 3/4" LEFT HAND THREAD	GALV. STEEL GRADE 8
3	SD750940	1	CLEVIS TAIL RHL	GALV. FORGED STEEL
2	SD750941	1	CLEVIS TAIL LHL	GALV. FORGED STEEL
1	SD750507	1	BODY	GALV. FORGED STEEL

THIS DRAWING IS A CONTROLLED DOCUMENT. IT IS SUBJECT TO CHANGE AND THE CONTROLLING ENGINEERING ORGANIZATION SHOULD BE CONTACTED FOR THE LATEST REVISION.

TOLERANCES UNLESS OTHERWISE SPECIFIED PER
Dims ≤35mm: .....±0.7mm
Dims >35mm: ..... ±2%

DIMENSIONS MILLIMETERS
PIP CODE P00278–000
APPLICATION SPEC –
PRODUCT SPEC. –
MATERIAL –
FINISH –

CUSTOMER DRAWING FOR REFERENCE ONLY

DRAWN SIRISAK DATE 01/04/10
CHECKED DATE Mar 21, 11
APPROVED DATE 22/3/11
WEIGHT 3.5 KG.
CAGE CODE DO***
SCALE NTS.
SHEET 1 OF 1

PREFORMED LINE PRODUCTS

NAME
TURNBUCKLE CLEVIS CLEVIS
3/4x12"
TBCC–120–3/4–12

SIZE A4
DRAWING NUMBER A4DD17520T
REV 4

DRAFT

THIS DRAWING IS UNPUBLISHED. RELEASED FOR PUBLICATION .20
© COPYRIGHT 20 ALL RIGHTS RESERVED.

LOC	DIST

REVISIONS

P	LTR	DESCRIPTION	DATE	DWN	APVD
	4	EA 11533	23/05/11	DT	CC
	-	-	-	-	-

Contract No. S100074-0228Q-TS11-THPPE-CH-01
Item : A1-20, B1-16
Legend No : 80.38

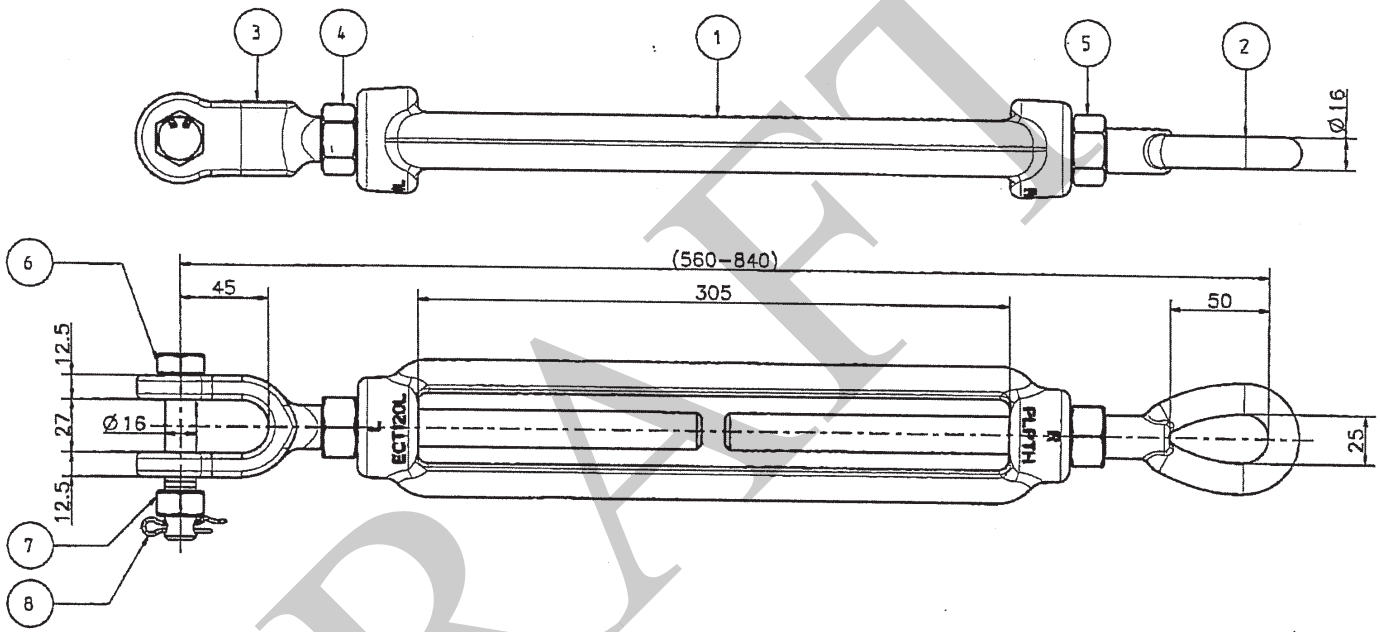

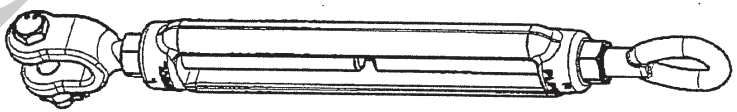

3D VIEW

NOTES

1. MARKED : ECT120L
   L
   R
   PLPTH
   SUPPLIER IDENTIFICATION
   MONTH/YEAR OF MANUFACTURE
2. MIN. UTS. 120 KN. (12,300 KG)
3. BOLTS THREADES TO EXTEND APPROX. 10 OUTSIDE AFTER INSTALLATION
4. ALL FERROUS METAL PARTS SHALL BE HOT–DIP GALVANIZED IN ACCORDANCE WITH ASTM A 153.

ITEM	REFERENCE	QTY	DESIGNATION	MATERIAL
8	SD500013	1	SPLIT PIN	STAINLESS STEEL
7	SD500000_M16	1	HEX NUT M16	GALV. STEEL GRADE 8
6	SD000043	1	HEX BOLT M16-85-27 DRILL Ø5.5	GALV. STEEL GRADE 8.8
5	SD500001_34	1	HEX NUT 3/4" RIGHT HAND THREAD	GALV. STEEL GRADE 8
4	SD500022_34	1	HEX NUT 3/4" LEFT HAND THREAD	GALV. STEEL GRADE 8
3	SD300199	1	CLEVIS TAIL LHL	GALV. FORGED STEEL
2	SD750937	1	EYE TAIL RHL	GALV. FORGED STEEL
1	SD750507	1	BODY	GALV. FORGED STEEL

THIS DRAWING IS A CONTROLLED DOCUMENT. IT IS SUBJECT TO CHANGE AND THE CONTROLLING ENGINEERING ORGANIZATION SHOULD BE CONTACTED FOR THE LATEST REVISION.

TOLERANCES UNLESS OTHERWISE SPECIFIED PER
Dims ≤35mm: ....±0.7mm
Dims >35mm: ..... ±2%

DIMENSIONS MILLIMETERS
PIP CODE 958324–000
APPLICATION SPEC –
PRODUCT SPEC. –
MATERIAL –
FINISH –
WEIGHT 4.6 KG.
CAGE CODE 00***
SCALE NTS.
SHEET 1 OF 1

CUSTOMER DRAWING FOR REFERENCE ONLY

DRAWN DASSAKORN DATE 19/11/10
CHECKED DATE May 24, 11
APPROVED DATE 27/6/11

PREFORMED LINE PRODUCTS

NAME
16MM
EYE–CLEVIS TURNBUCKLE

SIZE A4
DRAWING NUMBER A4DD17880T
REV 4

DRAFT

THIS DRAWING IS UNPUBLISHED. RELEASED FOR PUBLICATION ,20
© COPYRIGHT 20 ALL RIGHTS RESERVED.

LOC	DIST

REVISIONS

P	LTR	DESCRIPTION	DATE	DWN	APVD
	5	EA 11533	23/05/11	DT	CC
	-	-	-	-	-

Contract No. S100074-0228Q-TS11-THPPE-CH-01
Item : A1-21, B1-17
Legend No : 80.39

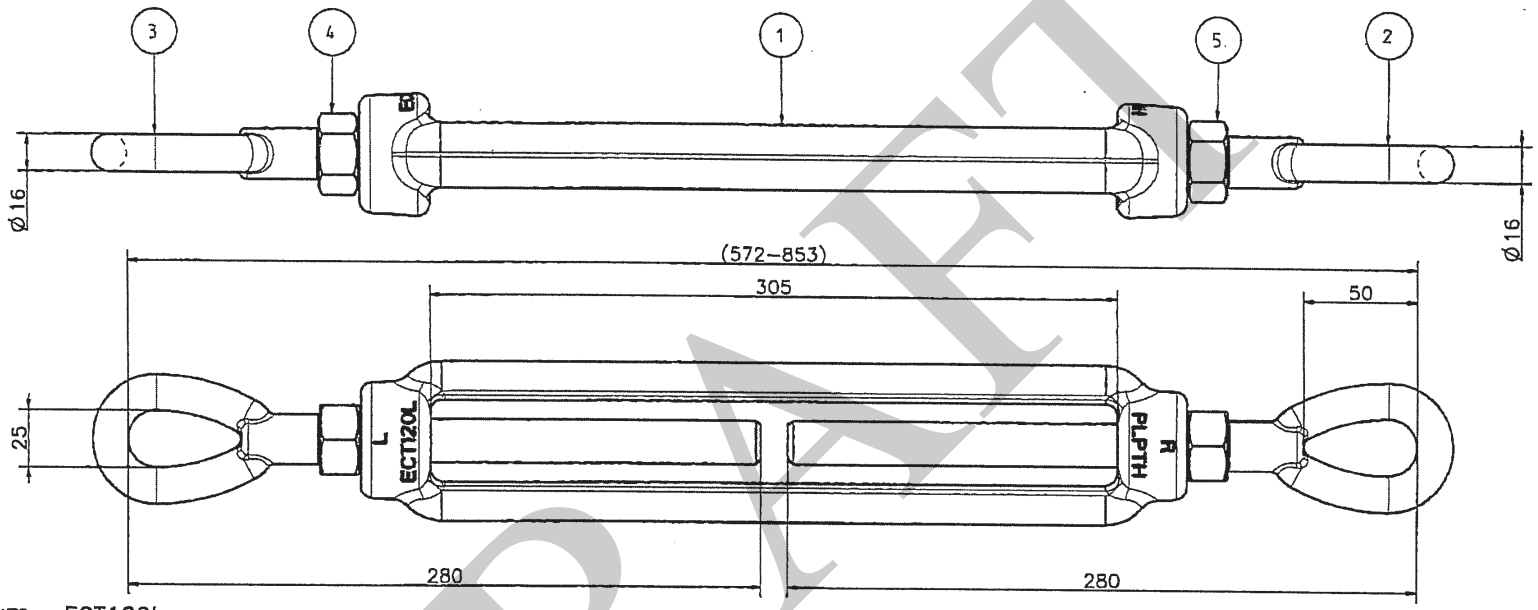

NOTES

1. MARKED : ECT120L
   L
   R
   PLPTH
   SUPPLIER IDENTIFICATION
   MONTH/YEAR OF MANUFACTURE
2. MIN. UTS. 120 KN. (12,300 KG)
3. ALL FERROUS METAL PARTS SHALL BE HOT-DIP GALVANIZED IN ACCORDANCE WITH ASTM A 153.
4. BOLTS THREADS TO EXTEND APPROX. 10 mm OUTSIDE ATER INSTALLATION

3D VIEW

ITEM	REFERENCE	QTY	DESIGNATION	MATERIAL
5	SD500001_34	1	HEX. NUT 3/4" RIGHT HAND THREAD	GALV. STEEL GRADE 8
4	SD500022_34	1	HEX. NUT 3/4" LEFT HAND THREAD	GALV. STEEL GRADE 8
3	SD750939	1	EYE TAIL LHL	GALV. FORGED STEEL
2	SD750937	1	EYE TAIL RHL	GALV. FORGED STEEL
1	SD750507	1	BODY	GALV. FORGED STEEL

THIS DRAWING IS A CONTROLLED DOCUMENT. IT IS SUBJECT TO CHANGE AND THE CONTROLLING ENGINEERING ORGANIZATION SHOULD BE CONTACTED FOR THE LATEST REVISION.

TOLERANCES UNLESS OTHERWISE SPECIFIED PER
Dims ≤35mm: ....±0.7mm
Dims >35mm:..... ±2%

DIMENSIONS MILLIMETERS
PIP CODE P00268-000
APPLICATION SPEC –
PRODUCT SPEC. –
MATERIAL –
FINISH –
CUSTOMER DRAWING FOR REFERENCE ONLY

DRAWN SIRISAK DATE 07/04/10
CHECKED DATE May 23, 11
APPROVED DATE 27/6/11
WEIGHT 3.2 KG.
CAGE CODE 00
SCALE NTS.
SHEET 1 OF 1

PREFORMED LINE PRODUCTS

NAME
TURNBUCKLE EYE EYE
3/4x12"
TBEE-120-3/4-12

SIZE A4
DRAWING NUMBER A4DD17521T
REV 5

DRAFT

THIS DRAWING IS UNPUBLISHED. RELEASED FOR PUBLICATION
© COPYRIGHT 20 ALL RIGHTS RESERVED.

Contract No. S100074-0228Q-TS11-THPPE-CH-01
Item : A1-22
Legend No : 80.41

REVISIONS					
P	LTR	DESCRIPTION	DATE	DWN	APVD
	5	EA 9294	8/06/10	UC	CC
	6	EA 10371	6/10/10	UC	CC

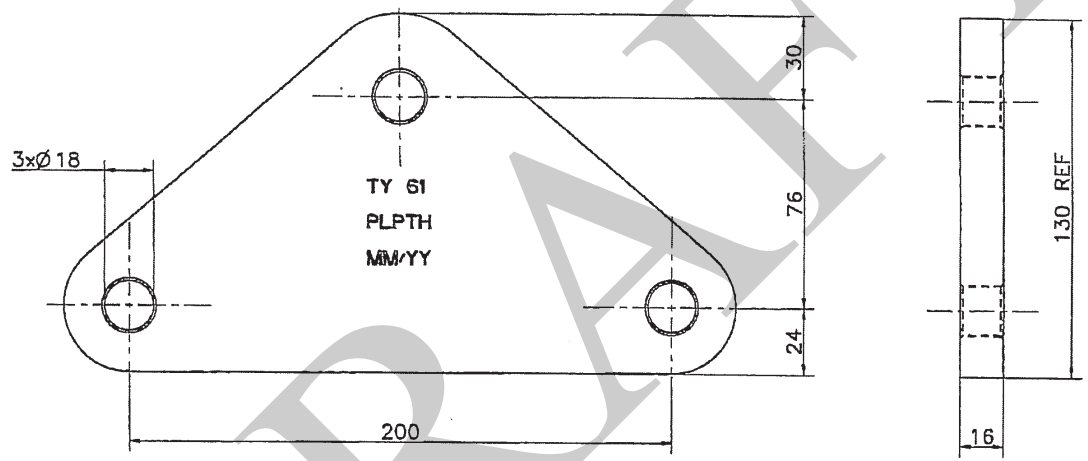

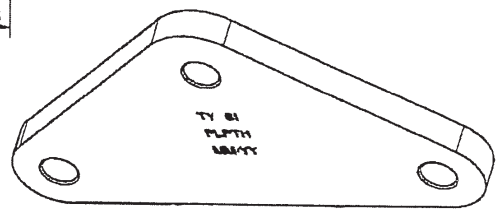

3D VIEW

NOTES
1. MARKED : TY61
PLPTH
MONTH/YEAR OF MANUFACTURE
2. MIN. UTS. 120 KN. (12,300 KG.)
3. ALL FERROUS METAL SHALL BE HOT-DIP GALVANIZED IN ACCORDANCE WITH ASTM A153.

ITEM	REFERENCE	QTY	DESIGNATION	MATERIAL
1	SD650273	1	BODY	GALV. STEEL

THIS DRAWING IS A CONTROLLED DOCUMENT. IT IS SUBJECT TO CHANGE AND THE CONTROLLING ENGINEERING ORGANIZATION SHOULD BE CONTACTED FOR THE LATEST REVISION.

TOLERANCES UNLESS OTHERWISE SPECIFIED PER
Dims ≤35mm: ....±0.7mm
Dims >35mm: ..... ±2%

DIMENSIONS MILLIMETERS
PIP CODE 248230-000
APPLICATION SPEC –
PRODUCT SPEC. –
MATERIAL –
FINISH –
CUSTOMER DRAWING FOR REFERENCE ONLY

DRAWN USANEE DATE 09/09/98
CHECKED DATE
APPROVED DATE 14/10/10
WEIGHT 2.6 KG.
CAGE CODE 00***
SCALE NTS.
SHEET 1 OF 1

PREFORMED LINE PRODUCTS

NAME
16MM
TRIA YOKE PLATE

SIZE A4
DRAWING NUMBER A4DD10569T
REV 6

DRAFT

THIS DRAWING IS UNPUBLISHED. RELEASED FOR PUBLICATION
(C) COPYRIGHT 20 ALL RIGHTS RESERVED.

Contract No. S100074-0228Q-TS11-THPPE-CH-01
Item : A1-27, B1-19
Legend No : 80.51

LOC	DIS

REVISIONS

P	LTR	DESCRIPTION	DATE	DWN	APVD
	2	EA 10392	7/10/10	UC	CC
	3	EA 11574	6/07/11	UC	CC

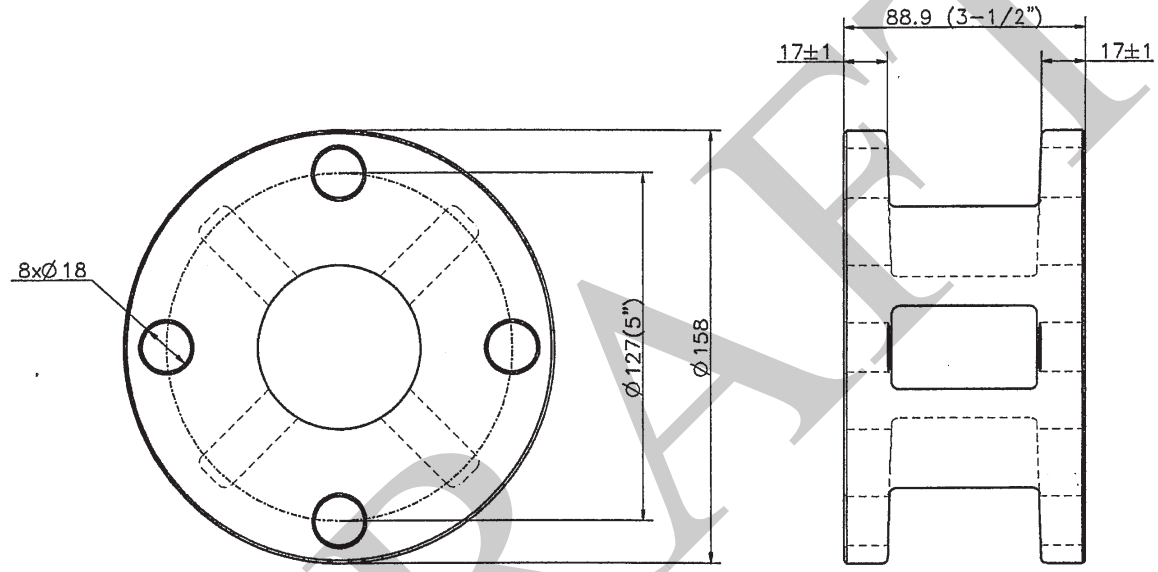

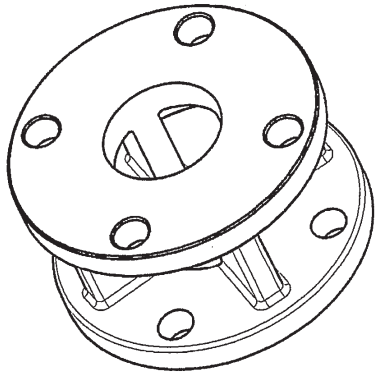

3D VIEW

NOTES

1. MARKED : SB-5"
   PLPTH
   SUPPLIER IDENTIFICATION
   MONTH/YEAR OF MANUFACTURE
2. ALL FERROUS METAL PARTS SHALL BE HOT-DIP GALVANIZED IN ACCORDANCE WITH ASTM A 153.

ITEM	REFERENCE	QTY	DESIGNATION	MATERIAL
1	SD750946	1	BODY	GALV. DUCTILE IRON

THIS DRAWING IS A CONTROLLED DOCUMENT. IT IS SUBJECT TO CHANGE AND THE CONTROLLING ENGINEERING ORGANIZATION SHOULD BE CONTACTED FOR THE LATEST REVISION.

TOLERANCES UNLESS OTHERWISE SPECIFIED PER
Dims ≤35mm: .....±0.7mm
Dims >35mm:..... ±2%

DIMENSIONS MILLIMETERS
PIP CODE P00280-000
APPLICATION SPEC –
PRODUCT SPEC. –
MATERIAL –
FINISH –
CUSTOMER DRAWING FOR REFERENCE ONLY

DRAWN SANCHAI DATE 12/03/10
CHECKED DATE
APPROVED DATE 6/7/11
WEIGHT 4.8 KG.
CAGE CODE 00***
SCALE NTS.
SHEET 1 OF 1

PREFORMED LINE PRODUCTS

NAME
3.5" SUB BASE 5" BC ON TOP AND BOTTOM

SIZE A4
DRAWING NUMBER A4DD17490T
REV 3

DRAFT

This drawing and all data contained therein is legal and intellectual property of LORÜNSER Austria GmbH and must not be altered or transmitted to any third party without our written consent.

Artikel-Nr. Article-No.	771.059.9
Un	525 kV AC
In	1250 A
Ith	50 kA1s
Ith	28,9 kA3s

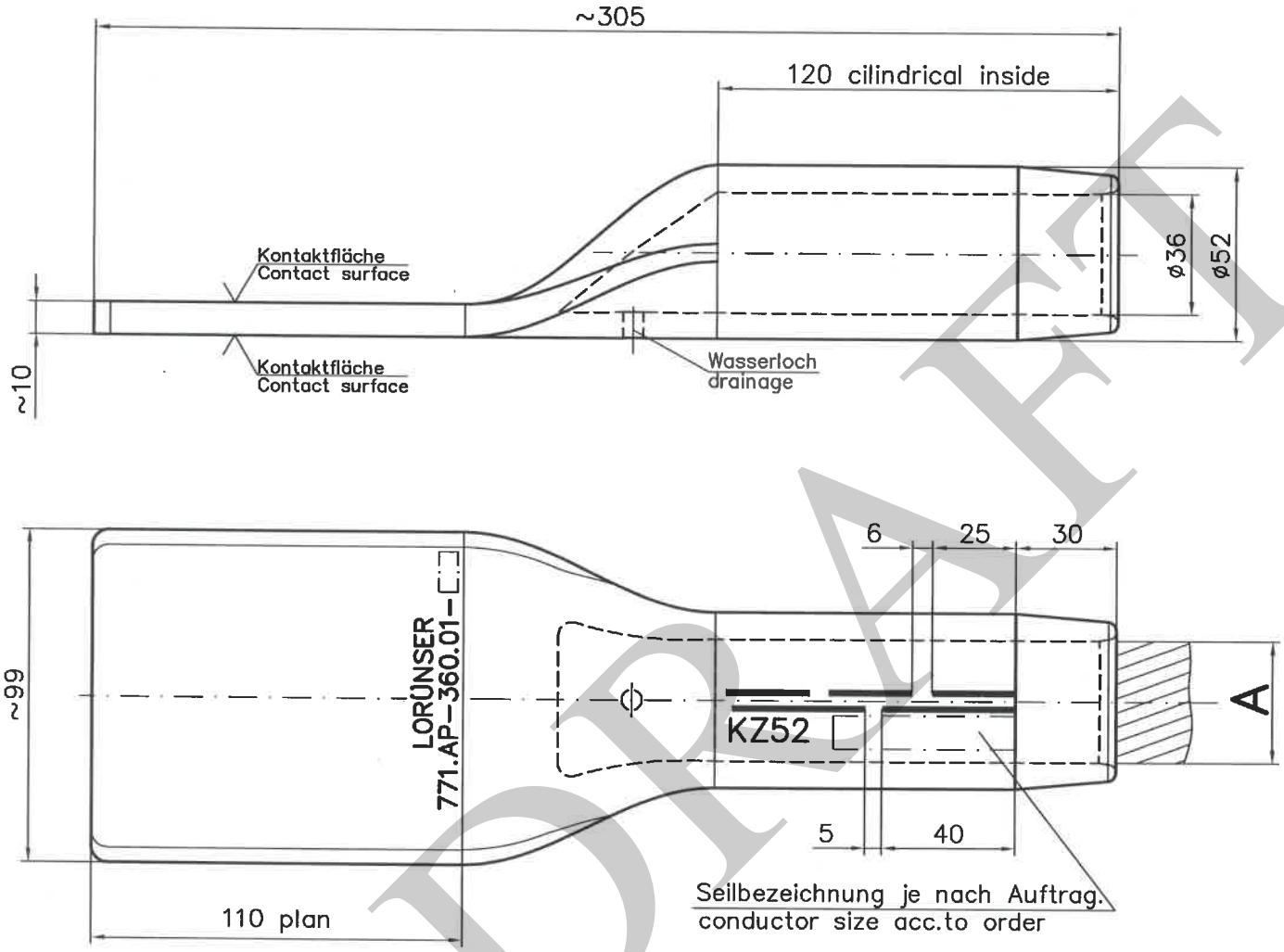

dimension after compression
(KZ52)

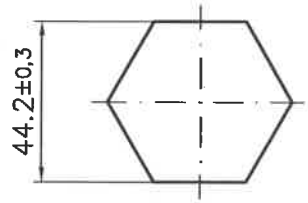

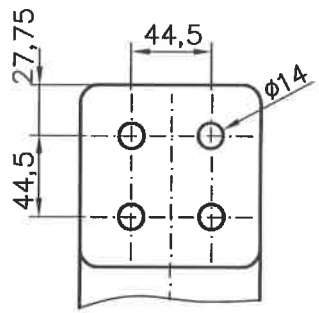

Drillingplan:

Pos.	Material
1	Aluminium AlSi1MgMn

AL-Compression-Flat-Terminal

Positions-Nr. Position-No.	3-13	Kundenprojekt Nummer Customer Project Number	Nam Theun 2 Hydroelectric Project
Projekt-Nr. Project-No.		Bemerkung Comments	
Änderung Revision	Datum Date		
LL-Bezug LL-Reference			

A=ø33,91
B=
C=
D=

Datum/Name Date/Name	Nr. No.

	Datum/Name Date/Name		
		Gewicht Weight	0,9 Kg
gez. drawn	17.10.2007 Fedor	Maßstab Scale	1:2,5
gepr. appr.	17.10.2007 Rinner	Werkzeuge früher	vorh.

Bauteil-Nr. Components

Artikel-Nr. Article-No. 771.059.9

LORÜNSER AUSTRIA

FOR CONSTRUCTION
SGD. Ch Thipchalun DATE 23 NOV 2001
ELECTRICITY GENERATING AUTHORITY OF THAILAND

DRAFT

Legend 16.45a

This drawing and all data contained therein is legal and intellectual property of LORÜNSER Austria GmbH and must not be altered or transmitted to any third party without our written consent.

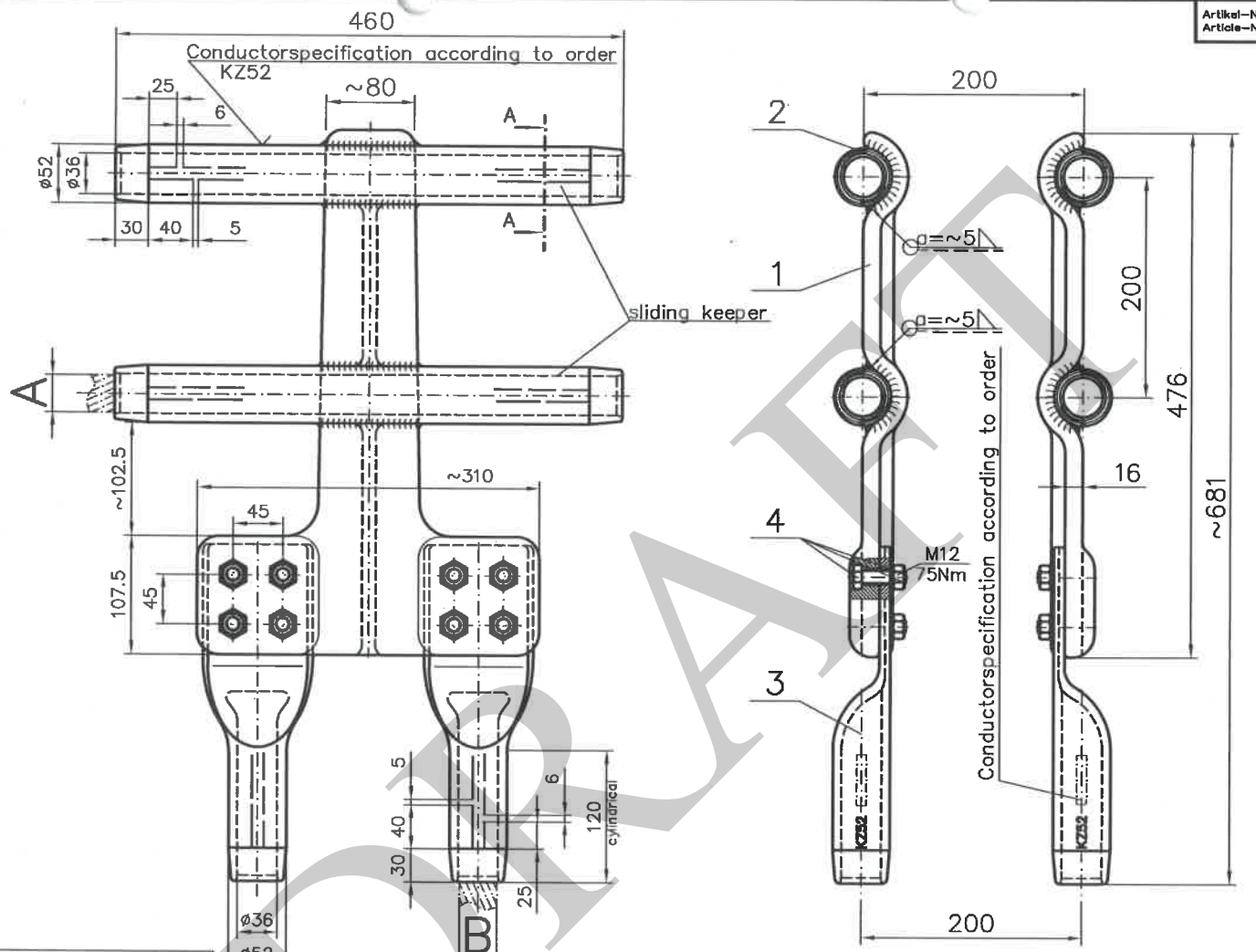

Artikel-Nr. Article-No.	1FB767-133
Un	525 kVAC
In	4000 A
Ith	50 kA1s
Ith	28,9 kA3s

section A–A
M 1:2

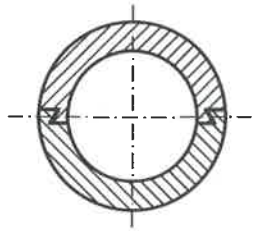

Dimension after compression for diameter A and B (KZ52)

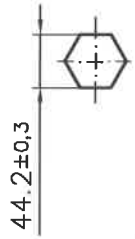

Pos.	Material
4	Steel A2-F80
3	Aluminium AlSi1MgMn
2	Aluminium AlSi1MgMn
1	Aluminium G-AlSi7Mg

DRAFT

AL-T-Compression-Quadruple-Clamp

Positions-Nr. Position-No.	3-11	Kundenprojekt Nummer Customer Project Number	Nam Theun 2 Hydroelectric Project	A=ø33,91	
Projekt-Nr. Project-No.		Bemerkung Comments	Ch Prychalum	B=ø33,91	
Änderung Revision	Datum Date			C=	
LL-Bezug LL-Reference				D=	

Datum/Name Date/Name		Nr. No.
a	10.10.2007 Fedor	Profil

Artikel-Nr. Article-No.	1FB767-133		
	Datum/Name Date/Name	Gewicht Weight	~17 Kg
gez. drawn	06.02.2007 Fedor	Maßstab Scale	1:6
gepr. appr.	06.02.2007 Rinner N.	Werkzeuge früher	vorh.
Bautell-Nr. Components			

LORÜNSER AUSTRIA

Legend 17.55a

THIS DRAWING IS UNPUBLISHED. RELEASED FOR PUBLICATION
© COPYRIGHT 20 ALL RIGHTS RESERVED.

Contract No. S100074-0228Q-TS11-THPPE-CH-01
Item : A1-2
Legend No : 16.49

REVISIONS					
P	LTR	DESCRIPTION	DATE	DWN	APVD
	2	EA 9695	1/07/10	UC	CC
	3	EA 10383	6/10/10	UC	CC

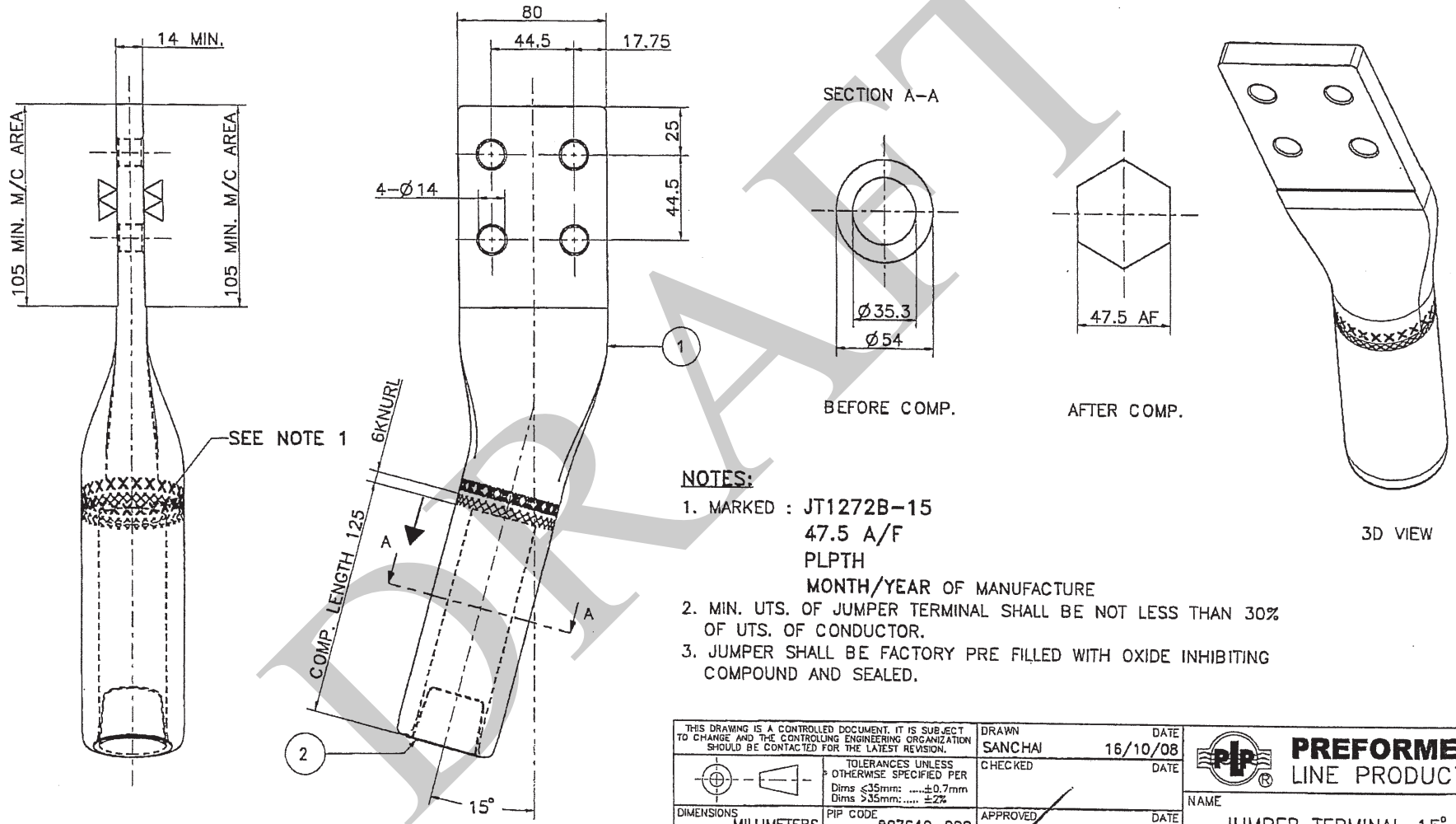

NOTES:

1. MARKED : JT1272B-15
   47.5 A/F
   PLPTH
   MONTH/YEAR OF MANUFACTURE
2. MIN. UTS. OF JUMPER TERMINAL SHALL BE NOT LESS THAN 30% OF UTS. OF CONDUCTOR.
3. JUMPER SHALL BE FACTORY PRE FILLED WITH OXIDE INHIBITING COMPOUND AND SEALED.

ITEM	REFERENCE	QTY	DESIGNATION	MATERIAL
2	CAP_35_3	1	PLASTIC CAP	PLASTIC
1	SD200325	1	BODY	ALUMINIUM GRADE 1050 T1

THIS DRAWING IS A CONTROLLED DOCUMENT. IT IS SUBJECT TO CHANGE AND THE CONTROLLING ENGINEERING ORGANIZATION SHOULD BE CONTACTED FOR THE LATEST REVISION.

TOLERANCES UNLESS OTHERWISE SPECIFIED PER
Dims ≤35mm: .....±0.7mm
Dims >35mm: ..... ±2%

DRAWN SANCHAI	DATE 16/10/08	CHECKED	DATE
DIMENSIONS MILLIMETERS	PIP CODE 897640-000	APPROVED	DATE 18/10/10
APPLICATION SPEC –	PRODUCT SPEC. –		
MATERIAL –	FINISH –	WEIGHT 1.3 KG.	CAGE CODE 00***
CUSTOMER DRAWING	FOR REFERENCE ONLY	SCALE NTS.	SHEET 1 OF 1

PREFORMED LINE PRODUCTS

NAME
JUMPER TERMINAL 15°
1272MCM ACSR
STRANDING 42/4.42+7/2.46

SIZE	DRAWING NUMBER	REV
A4	A4DD16931T	3

DRAFT

THIS DRAWING IS UNPUBLISHED. RELEASED FOR PUBLICATION
© COPYRIGHT 20 ALL RIGHTS RESERVED.

Contract No. S100074-0228Q-TS11-THPPE-CH-01

Item : A1-6

Legend No : 17.55

REVISIONS					
P	LTR	DESCRIPTION	DATE	DWN	APVD
	1	EA 10405	9/10/10	UC	CC
	-	-	-	-	-

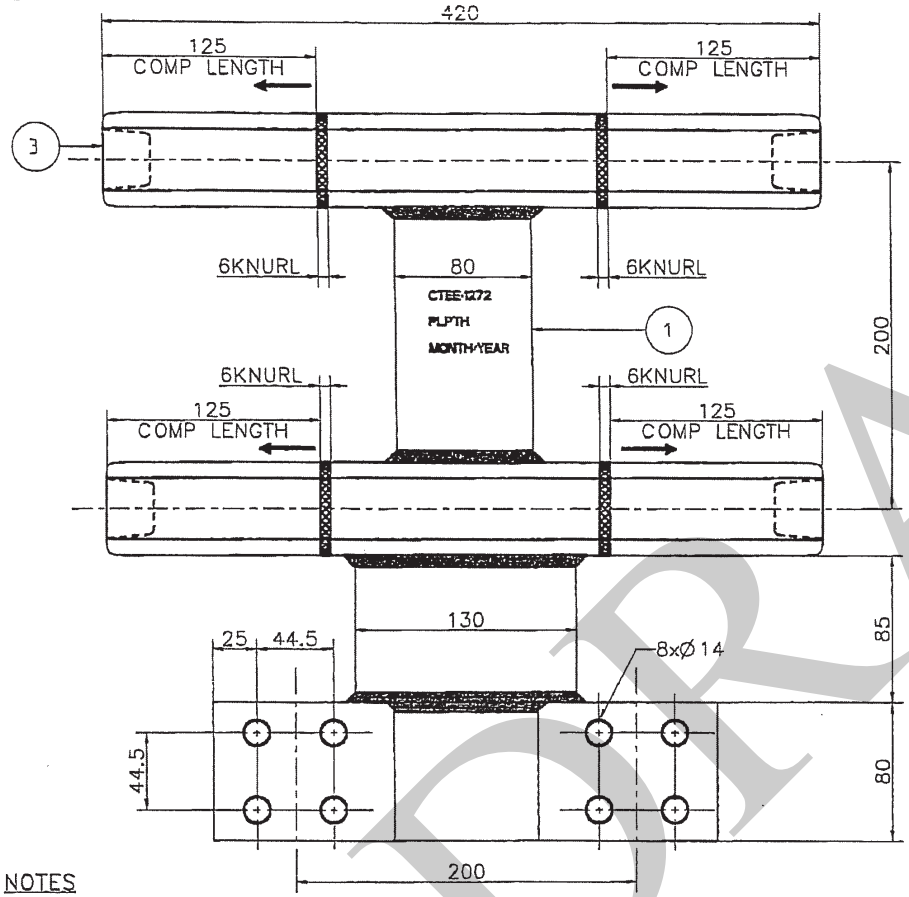

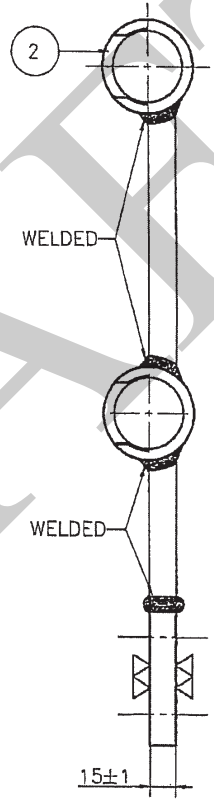

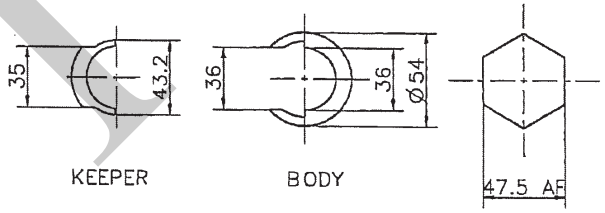

KEEPER BODY BEFORE COMP. AFTER COMP.

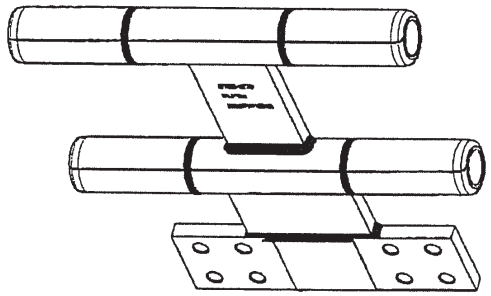

3D VIEW

NOTES

1. MARKED : CTEE–1272
   PLPTH
   MONTH/YEAR OF MANUFACTURE
2. OXIDE INHIBITING COMPOUND SHALL BE SUPPLIED AND CLOSED WITH A PLASTIC CAP AT BOTH ENDS

ITEM	REFERENCE	QTY	DESIGNATION	MATERIAL
3	CAP_35_3	4	PLASTIC CAP	PLASTIC
2	SD700860	2	KEEPER	ALUMINIUM GRADE 1050 T1
1	SD700859	1	BODY	ALUMINIUM GRADE 1050 T1

THIS DRAWING IS A CONTROLLED DOCUMENT. IT IS SUBJECT TO CHANGE AND THE CONTROLLING ENGINEERING ORGANIZATION SHOULD BE CONTACTED FOR THE LATEST REVISION.

TOLERANCES UNLESS OTHERWISE SPECIFIED PER
Dims ≤35mm: .....±0.7mm
Dims >35mm: ..... ±2%

DIMENSIONS MILLIMETERS
PIP CODE 767074–000
APPLICATION SPEC –
PRODUCT SPEC. –
MATERIAL –
FINISH –
CUSTOMER DRAWING FOR REFERENCE ONLY

DRAWN USANEE DATE 9/10/10
CHECKED DATE
APPROVED DATE 19/10/10
WEIGHT 5.0 KG.
CAGE CODE 00***
SCALE NTS.
SHEET 1 OF 1

PREFORMED LINE PRODUCTS

NAME
DOUBLE TEE CONNECTOR
1272MCM ACSR
STRANDING 42/4.42+7/2.46

SIZE A4
DRAWING NUMBER A4DD17836T
REV 1

DRAFT

THIS DRAWING IS UNPUBLISHED. RELEASED FOR PUBLICATION
© COPYRIGHT 20 ALL RIGHTS RESERVED.

Contract No. S100074-0228Q-TS11-THPPE-CH-01
Item : A1-9
Legend No : 24.45

REVISIONS					
P	LTR	DESCRIPTION	DATE	DWN	APVD
	B	EA 10385	6/10/10	UC	CC
	-	-	-	-	-

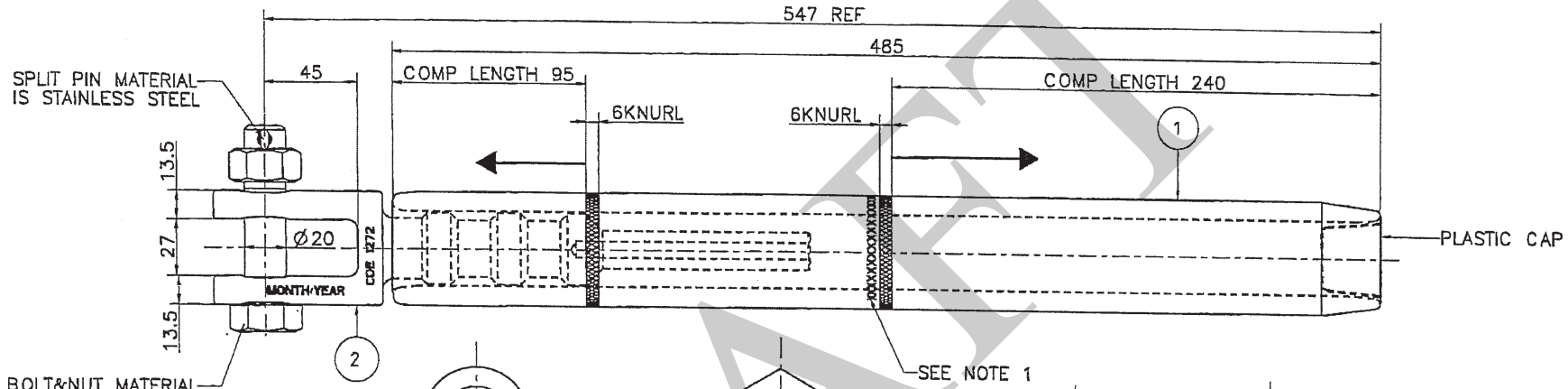

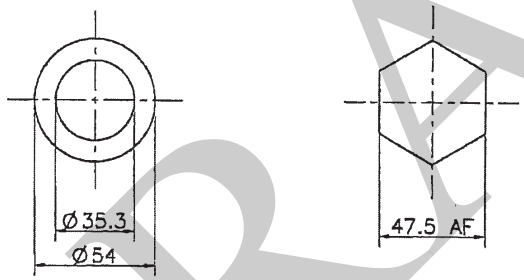

BEFORE COMP AFTER COMP

ITEM 1

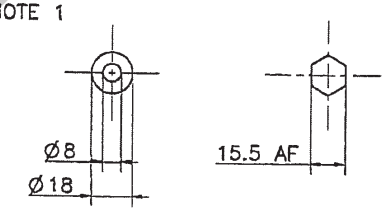

BEFORE COMP AFTER COMP

ITEM 2

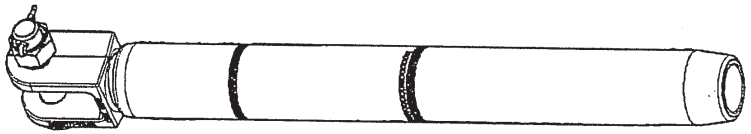

3D VIEW

NOTES
1. MARKED : CDE1272NP
47.5 A/F
PLPTH
MONTH/YEAR OF MANUFACTURE
2. MIN. UTS. OF DEAD END SHALL BE NOT LESS THAN 95% OF UTS. OF CONDUCTOR
3. SLEEVE SHALL BE FACTORY PRE FLIIED WITH OXIDE INHIBITING COMPOUND AND SEALED
4. ALL FERROUS METAL PARTS SHALL BE HOT-DIP GALVANIZED IN ACCORDANCE WITH ASTM A 153

ITEM	REFERENCE	QTY	DESIGNATION	MATERIAL
2	SD300013	1	CLEVIS TAIL ASSEMBLY M20	GALV. FORGED STEEL+STAINLESS STEEL
1	SD100108	1	BODY	ALUMINIUM GRADE 1050 T1

THIS DRAWING IS A CONTROLLED DOCUMENT. IT IS SUBJECT TO CHANGE AND THE CONTROLLING ENGINEERING ORGANIZATION SHOULD BE CONTACTED FOR THE LATEST REVISION.

TOLERANCES UNLESS OTHERWISE SPECIFIED PER
Dims ≤35mm: ....±0.7mm
Dims >35mm: ..... ±2%

DIMENSIONS: MILLIMETERS
PIP CODE: 123728-000
APPLICATION SPEC: –
PRODUCT SPEC.: –
MATERIAL: –
FINISH: GALV.
CUSTOMER DRAWING FOR REFERENCE ONLY

DRAWN: VK. DATE: 18/11/99
CHECKED DATE
APPROVED DATE 14/10/10
WEIGHT: 3.6 KG.
CAGE CODE: 00***
SCALE: NTS.
SHEET 1 OF 1

PREFORMED LINE PRODUCTS

NAME: CLEVIS COMP DED END 1272MCM ACSR STRANDING 42/4.42+7/2.46

SIZE: A4
DRAWING NUMBER: A4DD08740T
REV: 8

DRAFT

THIS DRAWING IS UNPUBLISHED. RELEASED FOR PUBLICATION
© COPYRIGHT 20 ALL RIGHTS RESERVED.

Contract No. S100074-0228Q-TS11-THPPE-CH-01
Item : A1-17
Legend No : 80.26

REVISIONS					
P	LTR	DESCRIPTION	DATE	DWN	APVD
	3	EA 10396	7/10/10	UC	CC
	-	-	-	-	-

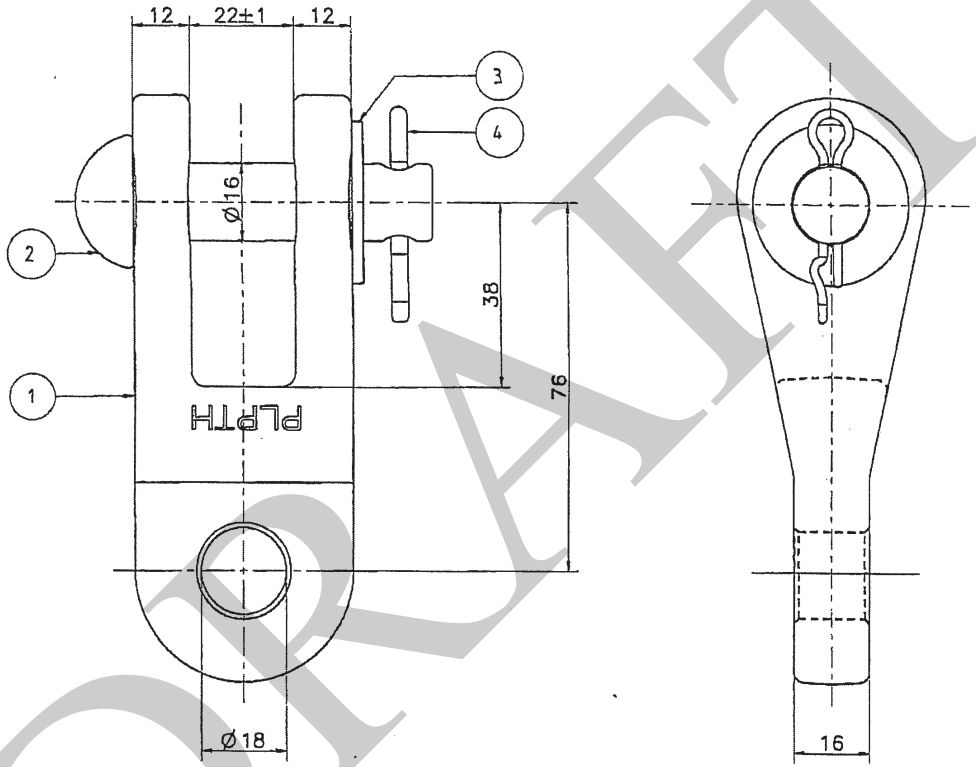

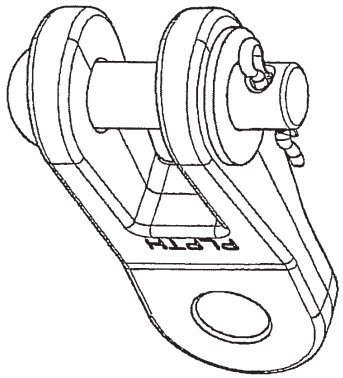

3D VIEW

NOTES
1. MARKED : TCT80
PLPTH
SUPPLIER IDENTIFICATION
MONTH/YEAR OF MANUFACTURE
2. MIN. UTS. 80 KN. (8,200 KG.)
3. ALL FERROUS METAL SHALL BE HOT-DIP GALVANIZED IN ACCORDANCE WITH ASTM A153.

ITEM	REFERENCE	QTY	DESIGNATION	MATERIAL
4	SD500013	1	SPLIT PIN	STAINLESS STEEL
3	SD500011	1	PLAIN WASHER Ø16mm	GALV. STEEL
2	SD095003	1	RIVET Ø16mm. LENGTH 63mm	GALV. STEEL
1	SD751094	1	BODY	GALV. DUCTILE IRON

THIS DRAWING IS A CONTROLLED DOCUMENT. IT IS SUBJECT TO CHANGE AND THE CONTROLLING ENGINEERING ORGANIZATION SHOULD BE CONTACTED FOR THE LATEST REVISION.

TOLERANCES UNLESS OTHERWISE SPECIFIED PER
Dims ≤35mm: ....±0.7mm
Dims >35mm: ..... ±2%

DIMENSIONS MILLIMETERS
PIP CODE 964022-000
APPLICATION SPEC –
PRODUCT SPEC. –
MATERIAL –
FINISH –
CUSTOMER DRAWING FOR REFERENCE ONLY

DRAWN USANEE DATE 10/07/10
CHECKED DATE
APPROVED DATE 14/10/10
WEIGHT 0.7 KG.
CAGE CODE 00***
SCALE NTS
SHEET 1 OF 1

PREFORMED LINE PRODUCTS

NAME
TWISTED CLEVIS TONGUE 16MM BOSS

SIZE A4
DRAWING NUMBER A4DD17730T
REV 3

DRAFT

THIS DRAWING IS UNPUBLISHED. RELEASED FOR PUBLICATION
© COPYRIGHT 20 ALL RIGHTS RESERVED.

Contract No. S100074-0228Q-TS11-THPPE-CH-01
Item : A1-28
Legend No : 80.52

REVISIONS					
P	LTR	DESCRIPTION	DATE	DWN	APVD
	2	EA 10393	7/10/10	UC	CC
	3	EA 10674	29/11/10	SJ	CC

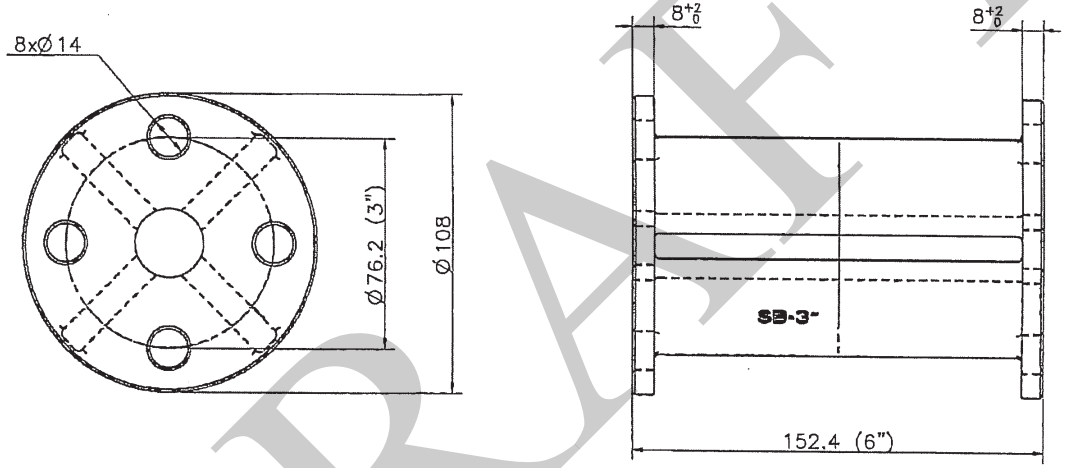

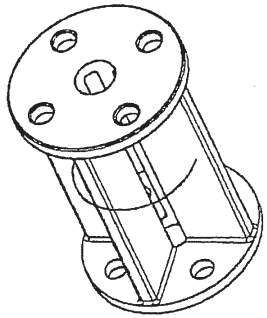

3D VIEW

NOTES

1. MARKED : SB–3"
   PLPTH
   SUPPLIER IDENTIFICATION
   MONTH/YEAR OF MANUFACTURE
2. ALL FERROUS METAL PARTS SHALL BE HOT–DIP GALVANIZED IN ACCORDANCE WITH ASTM A 153.

ITEM	REFERENCE	QTY	DESIGNATION	MATERIAL
1	SD750947	1	BODY	GALV. DUCTILE IRON

THIS DRAWING IS A CONTROLLED DOCUMENT. IT IS SUBJECT TO CHANGE AND THE CONTROLLING ENGINEERING ORGANIZATION SHOULD BE CONTACTED FOR THE LATEST REVISION.

TOLERANCES UNLESS OTHERWISE SPECIFIED PER
Dims ≤35mm: .....±0.7mm
Dims >35mm: ..... ±2%

DIMENSIONS MILLIMETERS
PIP CODE P00281–000
APPLICATION SPEC –
PRODUCT SPEC. –
MATERIAL –
FINISH –
CUSTOMER DRAWING FOR REFERENCE ONLY

DRAWN SANCHAI DATE 27/05/10
CHECKED DATE Nov 30, 10
APPROVED DATE 30/11/10
WEIGHT 2.8 KG.
CAGE CODE 00***
SCALE NTS.
SHEET 1 OF 1

PREFORMED LINE PRODUCTS

NAME
6" SUB BASE 3" BC
ON TOP AND BOTTOM

SIZE A4
DRAWING NUMBER A4DD17643T
REV 3

DRAFT

THIS DRAWING IS UNPUBLISHED. RELEASED FOR PUBLICATION
© COPYRIGHT 20 ALL RIGHTS RESERVED.

Contract No. S100074-0228Q-TS11-THPPE-CH-01
Item : A1-29
Legend No : 80.60

REVISIONS					
P	LTR	DESCRIPTION	DATE	DWN	APVD
	1	EA 10379	5/10/10	UC	CC
	-	-	-	-	-

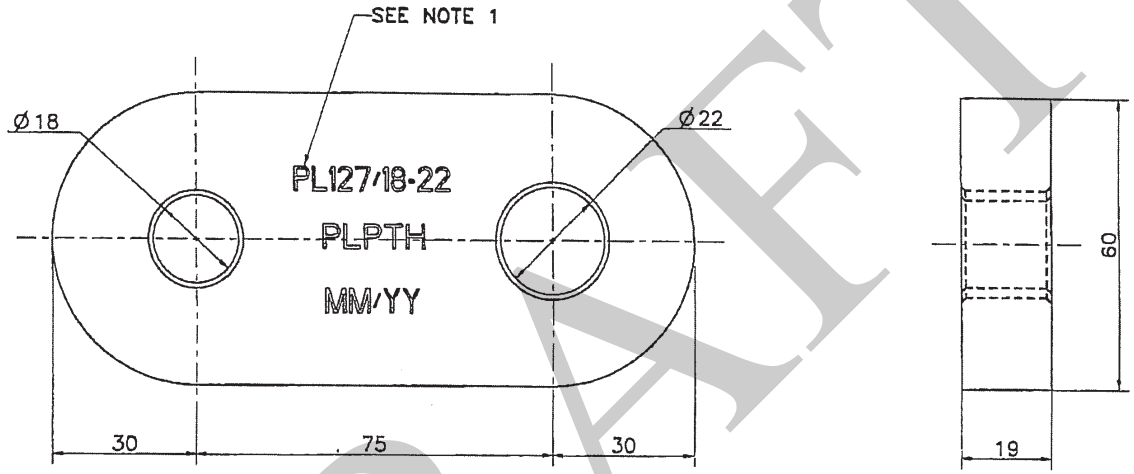

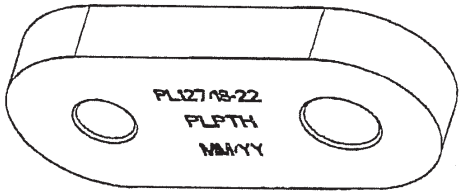

3D VIEW

NOTES
1. MARKED : PL127/18-22
PLPTH
MONTH/YEAR OF MANUFACTURE
2. MIN. UTS. 127KN. (13,000KG.)
3. REMOVE SHARP EDGES AND CORNERS BEFOR GALVAZING
4. ALL FERROUS METAL PARTS SHALL BE HOT-DIP GALVANIZED IN ACCORDANCE WITH ASTM A 153.

ITEM	REFERENCE	QTY	DESIGNATION	MATERIAL
1	17828T	1	PLATE LINK	GALV. STEEL

THIS DRAWING IS A CONTROLLED DOCUMENT. IT IS SUBJECT TO CHANGE AND THE CONTROLLING ENGINEERING ORGANIZATION SHOULD BE CONTACTED FOR THE LATEST REVISION.

TOLERANCES UNLESS OTHERWISE SPECIFIED PER
Dims ≤35mm: ....±0.7mm
Dims >35mm: .... ±2%

DRAWN USANEE	DATE 5/10/10	CHECKED	DATE
DIMENSIONS MILLIMETERS	PIP CODE 898688-000	APPROVED	DATE 18/10/10
APPLICATION SPEC –	PRODUCT SPEC. –		
MATERIAL –	FINISH GALV.	WEIGHT 1.0 KG.	CAGE CODE 00***
CUSTOMER DRAWING	FOR REFERENCE ONLY	SCALE NTS	SHEET 1 OF 1

PREFORMED LINE PRODUCTS

NAME
19MM
PLATE LINK

SIZE	DRAWING NUMBER	REV
A4	A4DD17828T	1

DRAFT

THIS DRAWING IS UNPUBLISHED. RELEASED FOR PUBLICATION
© COPYRIGHT 20 ALL RIGHTS RESERVED.

Contract No. S100074-0228Q-TS11-THPPE-CH-01
Item : A1-36
Legend No : XX.XX

LOC	DIS

REVISIONS

P	LTR	DESCRIPTION	DATE	DWN	APVD
	4	EA 10832	5/10/10	UC	CC
	5	EA 10673	29/11/10	SJ	CC

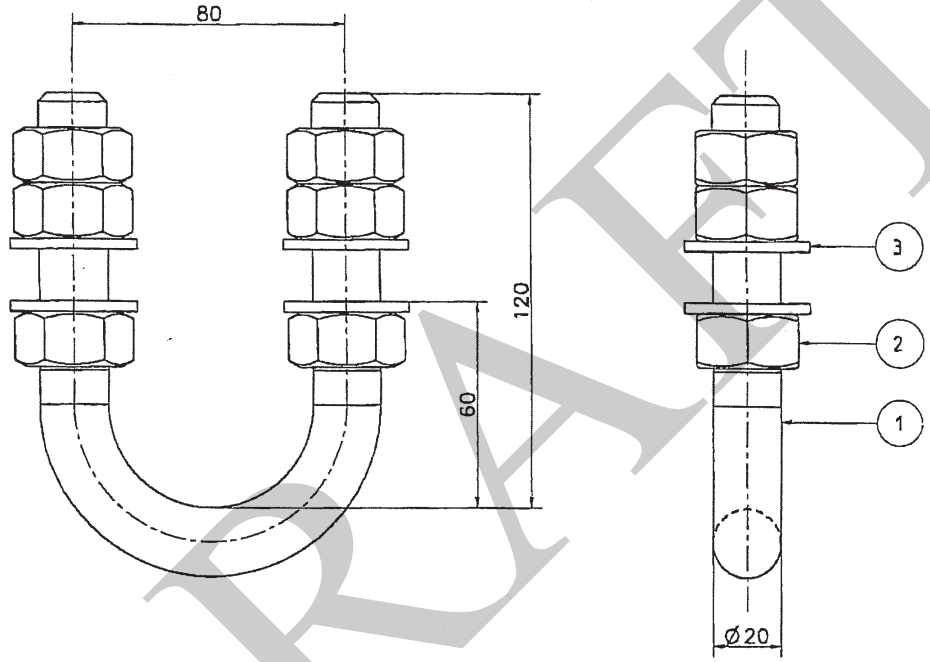

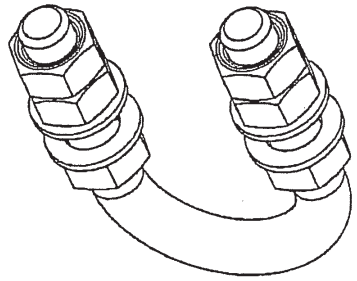

3D VIEW

NOTES

1. MARKED : UB20/80
   PLPTH
   SUPPLIER IDENTIFICATION
   MONTH/YEAR OF MANUFACTURE
2. MIN. UTS. 120 KN. (12,300 KG.)
3. ALL FERROUS METAL PARTS SHALL BE HOT-DIP GALVANIZED IN ACCORDANCE WITH ASTM A 153.

ITEM	REFERENCE	QTY	DESIGNATION	MATERIAL
3	SD500065	4	PLAIN WASHER M20	GALV. STEEL
2	SD500000_M20	6	HEX. NUT M20	GALV. STEEL GRADE 8
1	SD400052	1	U-BOLT M20-120-80S80	GALV. STEEL GRADE 4.6

THIS DRAWING IS A CONTROLLED DOCUMENT. IT IS SUBJECT TO CHANGE AND THE CONTROLLING ENGINEERING ORGANIZATION SHOULD BE CONTACTED FOR THE LATEST REVISION.

TOLERANCES UNLESS OTHERWISE SPECIFIED PER
Dims ≤35mm: ....±0.7mm
Dims >35mm:..... ±2%

DIMENSIONS MILLIMETERS
PIP CODE 915782-000
APPLICATION SPEC –
PRODUCT SPEC. –
MATERIAL –
FINISH –
CUSTOMER DRAWING FOR REFERENCE ONLY

DRAWN S.K. DATE 24/09/01
CHECKED DATE Nov 20, 10
APPROVED DATE 30/11/10
WEIGHT 1.2 KG.
CAGE CODE 00***
SCALE NTS.
SHEET 1 OF 1

PREFORMED LINE PRODUCTS

NAME
20MM U-BOLT
WITH NUTS AND WASHERS

SIZE A4
DRAWING NUMBER A4DD10547T
REV 5

DRAFT

THIS DRAWING IS UNPUBLISHED. RELEASED FOR PUBLICATION
© COPYRIGHT 20 ALL RIGHTS RESERVED.

LOC DIL

REVISIONS					
P	LTR	DESCRIPTION	DATE	DWN	APVD
	8	EA 9294	8/06/10	UC	CC
	9	EA 10370	6/10/10	UC	CC

Contract No. S100074-0228Q-TS11-THPPE-CH-01
Item : A1-23
Legend No : 80.42

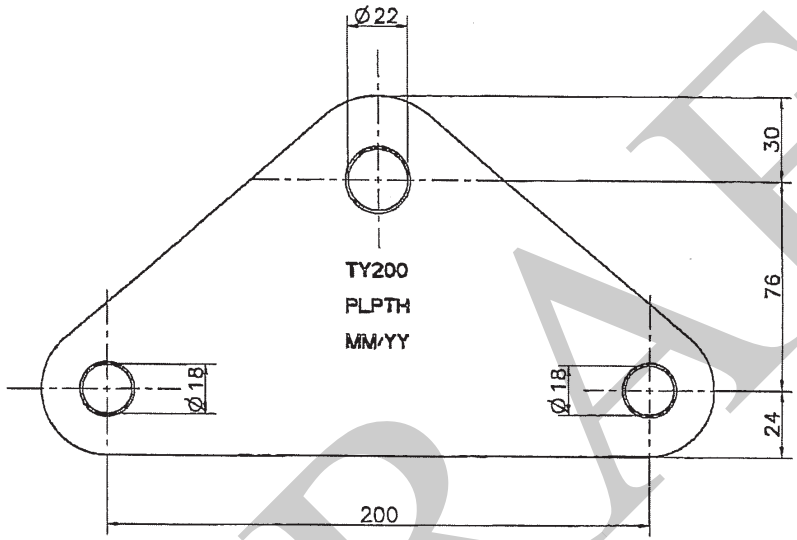

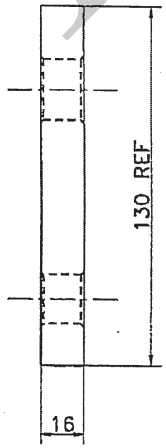

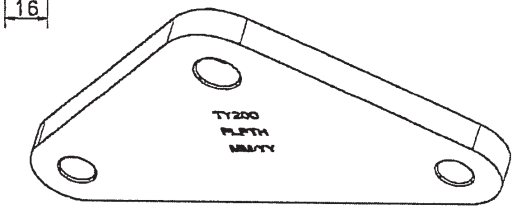

3D VIEW

DRAFT

NOTES
1. MARKED : TY200
PLPTH
MONTH/YEAR OF MANUFACTURE
2. MIN. UTS. 120 KN. (12,300 KG.)
3. ALL FERROUS METAL SHALL BE HOT-DIP GALVANIZED IN ACCORDANCE WITH ASTM A 153.

ITEM	REFERENCE	QTY	DESIGNATION	MATERIAL
1	SD650123	1	BODY	GALV. STEEL

THIS DRAWING IS A CONTROLLED DOCUMENT. IT IS SUBJECT TO CHANGE AND THE CONTROLLING ENGINEERING ORGANIZATION SHOULD BE CONTACTED FOR THE LATEST REVISION.

TOLERANCES UNLESS OTHERWISE SPECIFIED PER
Dims ≤35mm: .....±0.7mm
Dims >35mm: ..... ±2%

DIMENSIONS MILLIMETERS
PIP CODE E62281-000
APPLICATION SPEC –
PRODUCT SPEC. –
MATERIAL –
FINISH GALV.
CUSTOMER DRAWING FOR REFERENCE ONLY

DRAWN USANEE DATE 17/04/98
CHECKED DATE
APPROVED DATE 14/10/10
WEIGHT 2.6 KG.
CAGE CODE 00***
SCALE NTS.
SHEET 1 OF 1

PREFORMED LINE PRODUCTS

NAME
16MM
TRIA YOKE PLATE

SIZE A4
DRAWING NUMBER A4DD4372T
REV 9

REV.	DWG.NO.
03 / 02	SE-IS-9-01

LEGEND	DESCRIPTION	MANUFACTURER	CATALOG No.	QUANTITY A903	QUANTITY A904	QUANTITY A905	REMARK
90.00	Hinge Support Bracket L 100 x 80 x 12	Lorunser	4-17155	2	2	2	
90.01	Hinge 025/022/H130	Mosdorfer	4180.24	1	1	1	
90.03A	Arcing Horn Single 035/H220	Lorunser	530.280/220-135	-	-	2	
90.05	Tringular yoke plate 022/022/H90	Lorunser	620.200/2222	1	1	-	
90.07	Double Eye Twisted 024/H100	Mosdorfer	4261.12	2	2	-	
90.08	Plate Link 024/H100	Lorunser	544.100/2424	-	-	2	
90.10	Racket 050/H245	Lorunser	2262.50/245-1	2	2	-	
90.11	Arcing Horn Double 035/H150	Lorunser	530.250/150-235	1	1	-	
90.12	Ball Eye Twisted 024/IEC20/H125	Mosdorfer	4213.0013	1	1	-	
90.13	Arcing Ring 060/H1000	Lorunser	3-19433/1	1			
90.14	Socket Eye Straight 024/IEC20/H135	Mosdorfer	4220.0021	1	1	2	
90.20	Tringular yoke plate 024/B400/H90	Lorunser	620.400/2222.1	-	-	2	
90.21	Ball Eye Straight 024/H125	Mosdorfer	4213.0014	-	-	2	
90.22	Double Strap	Lorunser	570.350AL	-	-	1	
10.03a	Suspension Insulator Ball And Socket Type ANSI Class 52-8 (FOG-TYPE)	LAPP	302026Z-70-36	28	28	28	
11.25	Aluminum Conductor 1272 MCM.ACSR.	Charoong Thai	_	-	-	-	
12.49a	Quad Bundle Suspension Clamp	Lorunser	1SM120-030	-	1	-	
12.95a	Quad Bundle Suspension Coupler - Compression	Lorunser	1SN767-142	1	-	-	1 Set Includes 2 Connectors
16.45a	Compression Terminal for 1272 MCM.ACSR. 4 Holes NEMA Pad	Lorunser	771.059.9	-	-	-	Included with 12.95a
60.40	Flexible Copper Earth Shunt 350 mm.	Mosdorfer	4664.41/1	2	2	-	
60.40a	Flexible Copper Earth Shunt 1000 mm.	Mosdorfer	4664.41	-	-	4	

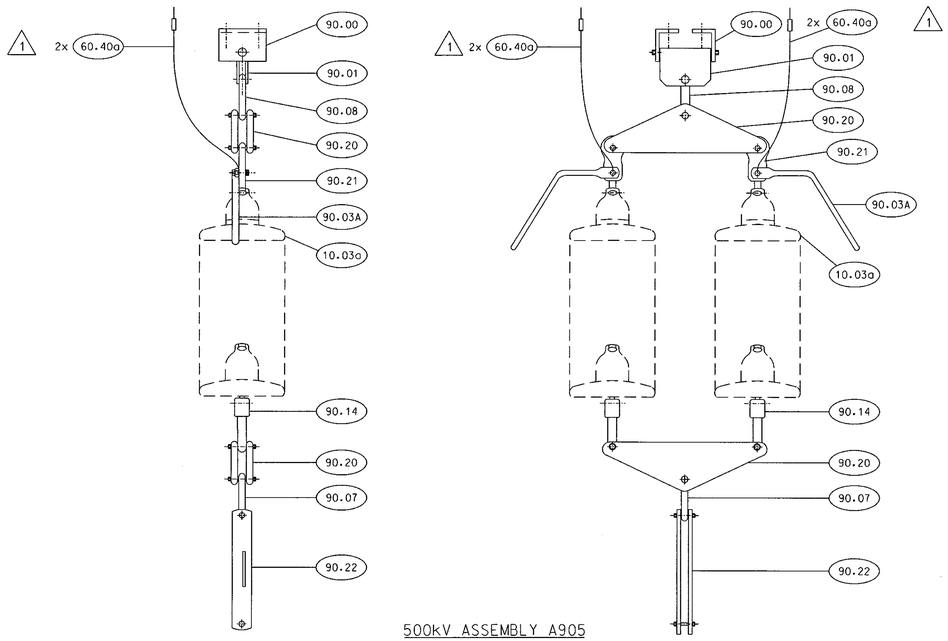

500kV ASSEMBLY A905
SUSPENSION INSULATOR ASSEMBLY

NOTE

1. Every Tenth Tension/Suspension Insulator Shall Be Grey, Counting From The Steel Structure
2. The total cross section of two flexible copper earth shunt conductors shall be determined by Contractor to be able withstand 50kA at 1 sec.

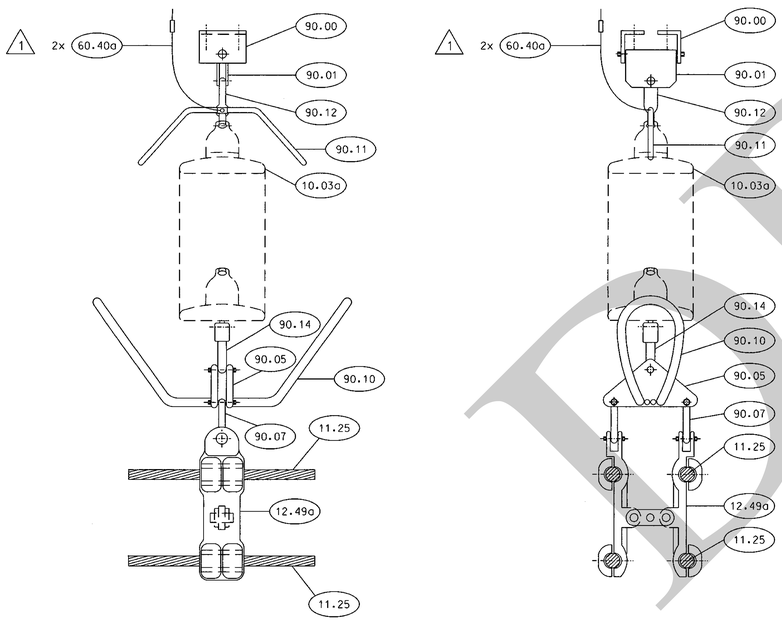

500kV ASSEMBLY A904
SUSPENSION INSULATOR ASSEMBLY

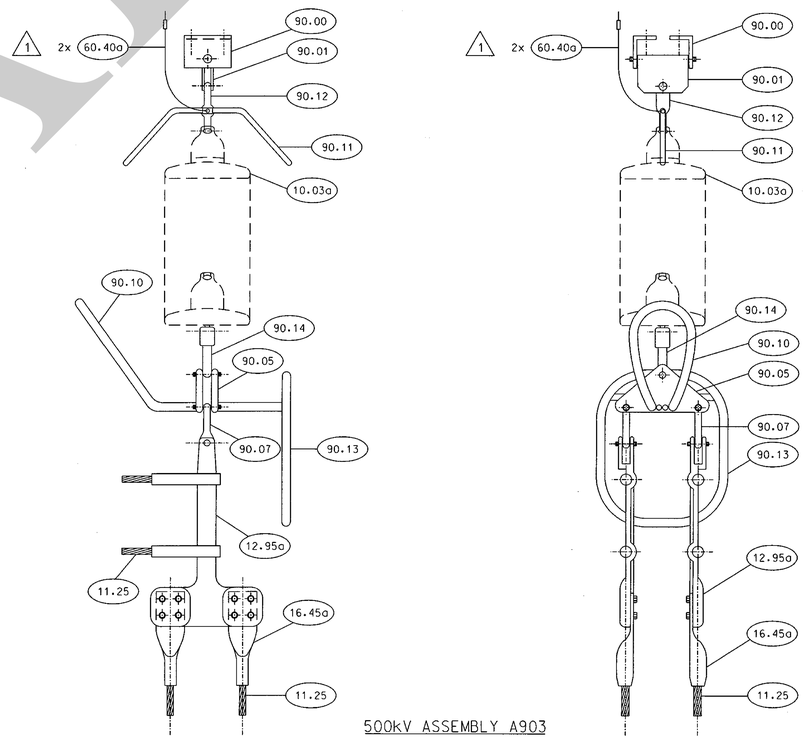

500kV ASSEMBLY A903
SUSPENSION INSULATOR ASSEMBLY

CABINET NO V1
RUN NO 4018

REV.NO.	JOB NO.	JOB DESCRIPTION	DRAWN	DESIGNED	VERIFIED	VALIDATED	RECOMMENDED	CONCURRED	APPROVED	DATE
2	-	ADDITIONAL NOTE NO.2 FOR 60.40a								
1	-	MODIFIED LEGEND 60.40 TO 2x60.40 AND LEGEND 60.40a TO 2x60.40a	-	-	-	-	-	-	-	-

ISO 9001 TSE-TSP : 2000
CAD CENTER
DO NOT AMEND MANUALLY

$$$$$$$$$$$$$$$$$$$$$$$$$$$$$$$$FILENAME
$$$$$$$$$$$$$$$$DATE
$$$$$$$$$$$$$$$$NAME

ELECTRICITY GENERATING AUTHORITY OF THAILAND

DRAWN: S. Somrit	VALIDATED: Himonwan, CHIEF-SUBSTATION ENGINEERING DEPARTMENT	DRAWING NAME: SUBSTATION ELECTRICAL INSTALLATION	
DESIGNED: N. Whang	RECOMMENDED: ASSISTANT DIRECTOR-TRANSMISSION SYSTEM ENGINEERING DIVISION	DESCRIPTION OF DETAIL DRAWING: 500kV INSULATOR ASSEMBLY	
VERIFIED: N. Whang	CONCURRED: DIRECTOR-TRANSMISSION SYSTEM ENGINEERING DIVISION		
APPROVED: ASSISTANT GOVERNOR - TRANSMISSION SYSTEM ENGINEERING	DATE: 21/04/17	JOB NO.: -	REPLACING DWG.NO.:

DWG.NO. SE-IS-9-01 REV. 02 / 03

DRAFT

IJ4OK-202		
Un	500*	[kV]
In	-	[A]
Ith	50	[kA1s]
BL >	-	[kN]

*in shielded area

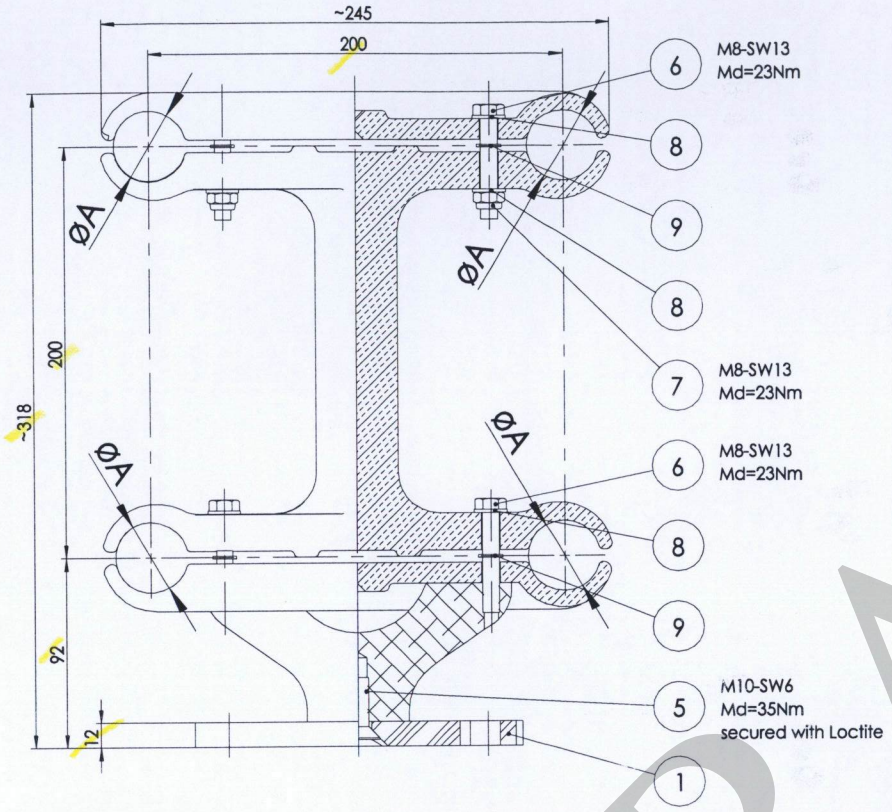

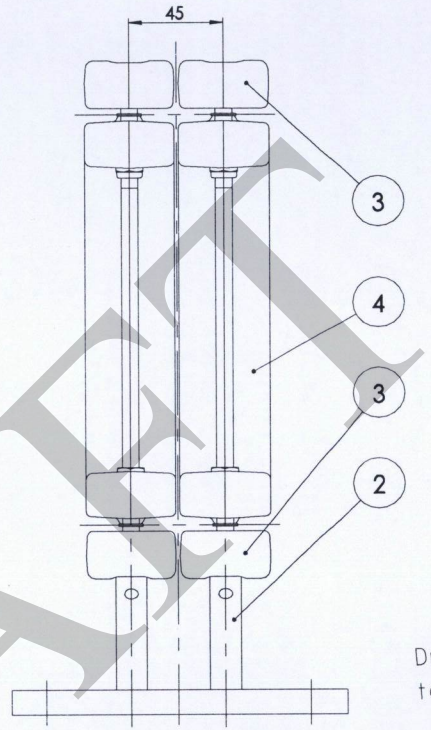

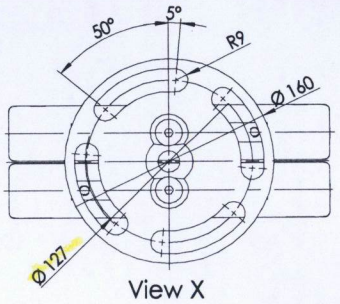

Drawing is subjected to technical revisions !

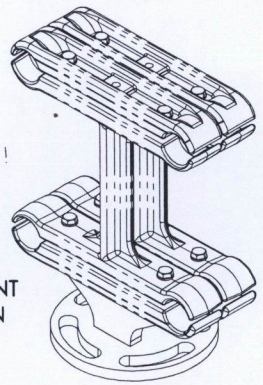

~~Including Corona Ring and Bolt set for installation~~

TS12-MC1-04 and RTS2-MC1-04 SUPPLY OF MISCELLANEOUS EQUIPMENT
TRANSMISSION SYSTEM IMPROVEMENT PROJECT NO.12, TRANSMISSION
SYSTEM EXPANSION AND RENOVATION PROJECT PHASE 2

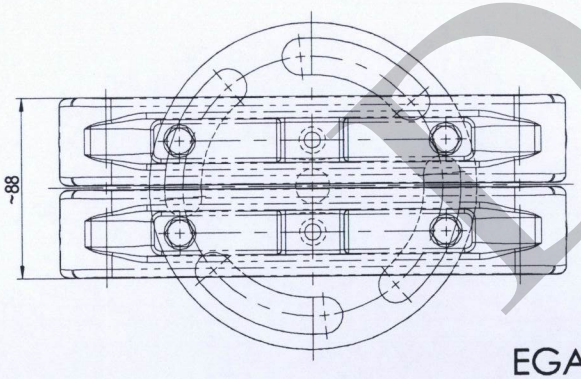

Item	Qty.	Description	Drawing	Material	Blank	Rem.
9	8	Security Ring 8	WN19-8	Elastomere		
8	12	Washer	DIN125-M 8-A2	A2		
7	4	Security Nut	DIN985-M 8-F70	A2-70		
6	8	Hexagon Screw	DIN933-M 8x 50-F80	A2F80		
5	2	Countersunk Head Screw	ISO10642-M10x30-F70	A2F70		
4	2	Spacer	BA07334-01	AC-AlSi7Mg0,3S-F	RA07334-01	
3	4	Body ø32,0-34,0	BA07334-02	AC-AlSi7Mg0,3S-F	RA07334-02	
2	2	Baseplate	BA05024-01	AW-AlSi1MgMn-T6		
1	1	Base Plate	BA00822-01	S235JR		fz

We reserve all rights in this document and in the information contained therein. Reproduction, use or disclosure to third parties without express authority is strictly forbidden.

Dimensions w/o tolerances as cast: GTA 15/5 DIN1688T1 machined DIN ISO2768 f m c v

CAD-drawing

Surface finish DIN ISO 1302 R2

			Date	Name
A=	ø33,91			
B=	ø	Drawn	21-02-2014	Franz
C=	ø	Checked	24-02-2014	Franz
D=	ø	Scale	1:2.5	Weight (kg) 5.7728

Rev.	Revision No.	Name	Date
-	Erstfreigabe	Franz	24-02-2014

4er-Bündel Leitungsträger m. Grundpl.
Quadruple support w. baseplate bolted

EGAT Legend 13.98a

RIBE subcon

Origin:

Art.No:	IJ4OK-202	Format	Sheet No.
Dwg.No:	BA07343	A3	1 of 1
Replaced dwg.		Rev: -	Replaced by

Item	Customer:	EGAT
A2-1	Project:	BID NO. TS12-MC1-04 & RTS2-MC1-04

SubCon

Status: FREIGEGEBEN

DRAFT

Artikel Nr. / Article No	1JB008-140

Un	525	kV
In	---	A
Ith	50	kA1s

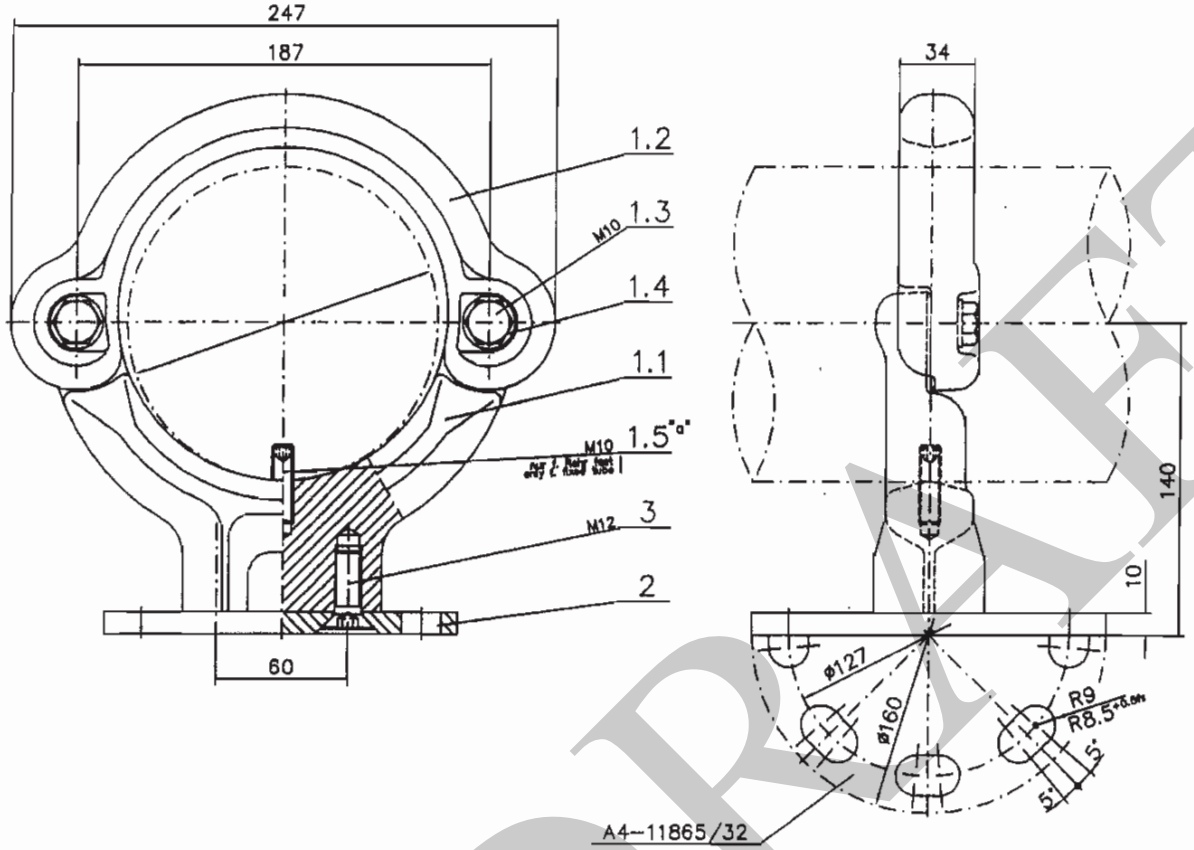

LEGEND 15.47A

ELECTRICITY GENERATING AUTHORITY OF THAILAND
Contract No - EGAT 47-N86707-8-2-30(43)IPPE-S1

Item - D | Terminal Number - 15.47

Benennung Al-Rohrleitungsträger
Description Al-Bus Support

Änd.	Was geaendert	Gez. Datum					
			A= ø141.3	gez.:	97-09-12	Hosp	Artikel Nr / Article No. 1JB008-140
"a"	Pos. Nr.	Hosp,98-12-09	B=	gepr.	97-09-12	Bily	Änderungen / Changes "a"
			C=	M=1:2,5			LORÜNSER LEICHTMETALL
			D=			vorh.	

DRAFT

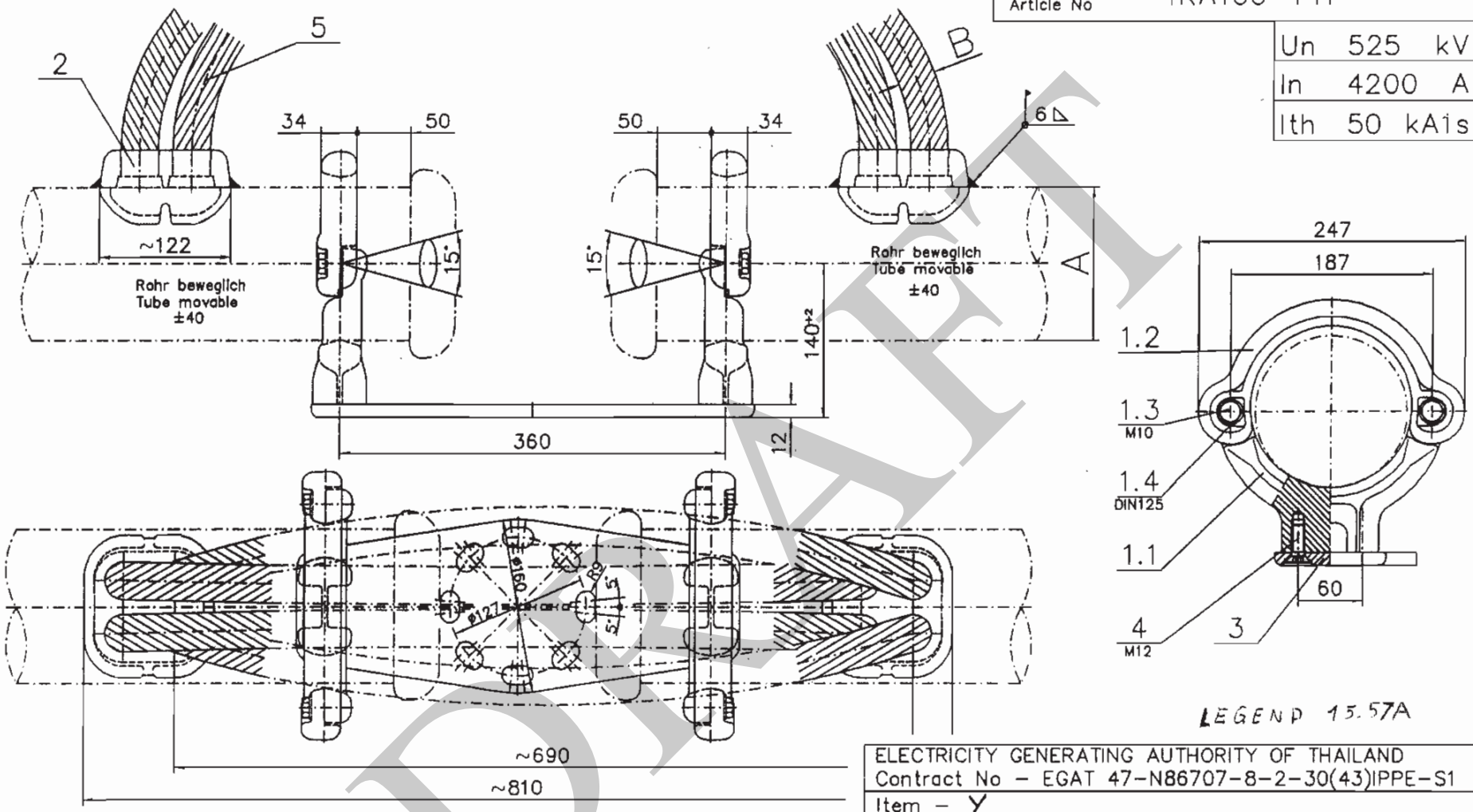

Artikel Nr. / Article No	1KA100–141
Un	525 kV
In	4200 A
Ith	50 kA1s

LEGEND 15.57A

ELECTRICITY GENERATING AUTHORITY OF THAILAND
Contract No – EGAT 47–N86707–8–2–30(43)IPPE–S1
Item – Y

Benennung Al–Ger.–Exp.–Verbindungsklemme
Description Al–Str.–Exp.–Coupler

Änd.	Was geaendert	Gez. Datum					
			A= ø141,3	gez.:	97–09–17	Hosp	Artikel Nr / Article No. 1KA100–141
			B= –ø34,4	gepr.	97–09–17	Bily	Änderungen / Changes
			C=	M=1:5			LORÜNSER LEICHTMETALL
			D=			vorh.	

DRAFT

Artikel Nr. Article No	1JJ821-141

Un	525	kV
In	4600	A
Ith	70	kA1s

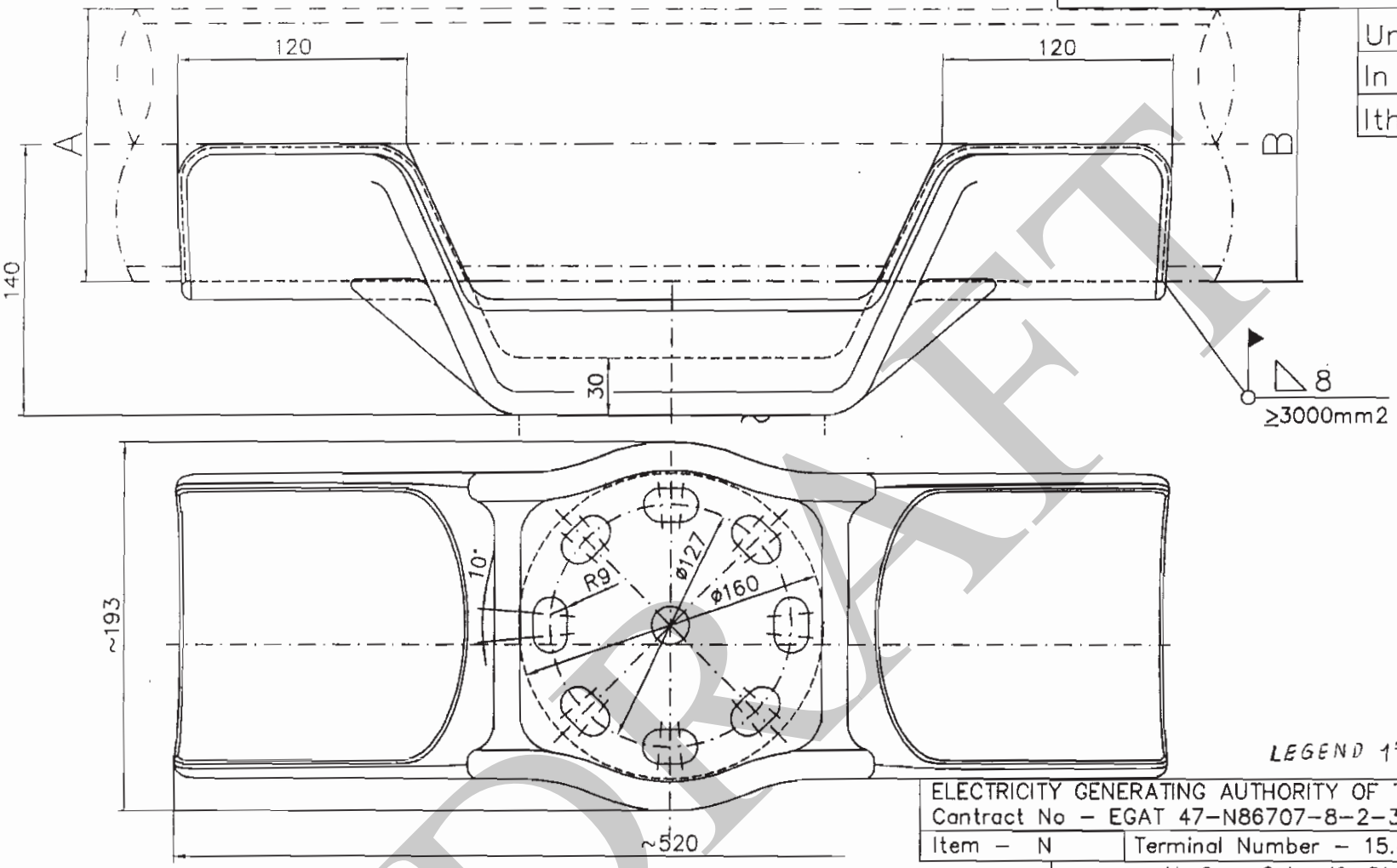

LEGEND 15.87A

ELECTRICITY GENERATING AUTHORITY OF THAILAND
Contract No – EGAT 47-N86707-8-2-30(43)IPPE-S1

Item – N	Terminal Number – 15.47

Benennung	Al-Ger.-Schweiß-Stoßleitungsträger
Description	Al-Str.-Welded-Bus Support

Änd. Rev.	Was geändert Description	gez., Datum drawn, Date					
			A= ø141,3	gez.: drawn:	08-02-1998	Schuster	Artikel Nr Article No. 1JJ821-141
			B= ø141,3	gepr.: checked:	98-06-18	Bily	Änderungen Revision
			C=	M=1:3			LORÜNSER LEICHTMETALL
			D=			vorh.	

DRAFT

This drawing and all data contained therein is legal and intellectual property of LORÜNSER Austria GmbH and must not be altered or transmitted to any third party without our written consent.

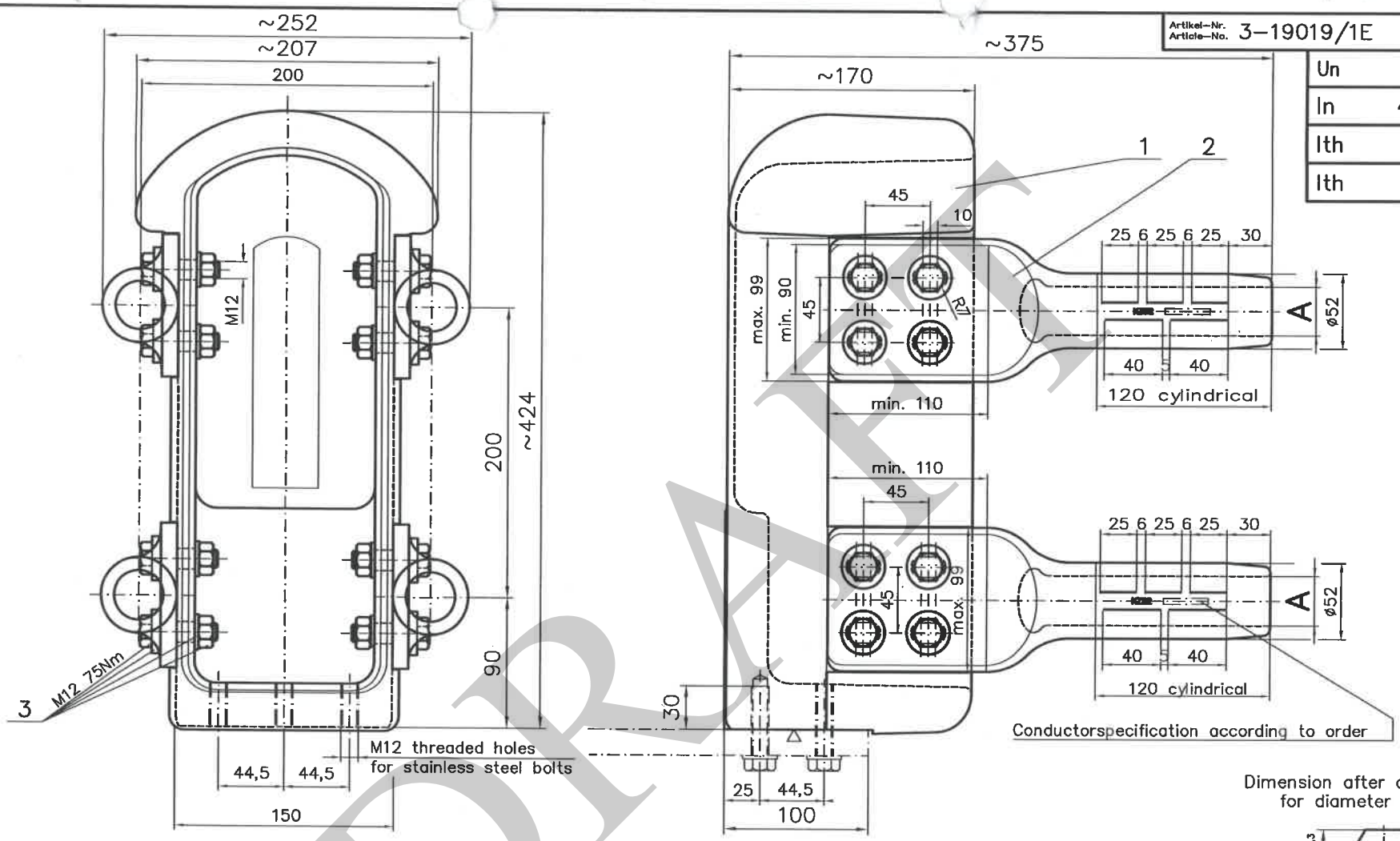

Pos.	Material
3	Steel A2–F80
2	Aluminium AlSi1MgMn
1	Aluminium G–AlSi7Mg

Un	525 kVAC
In	4000 A
Ith	50 kA1s
Ith	28,9 kA3s

Artikel–Nr. / Article–No. 3–19019/1E

Ch Mychalum

AL–Quadruple–Compression–Flat–Terminal

Artikel–Nr. / Article–No. 3–19019/1E

Positions–Nr. / Position–No.	3–5	Kundenprojekt Nummer / Customer Project Number	Nam Theun 2 Hydroelectric Project
Projekt–Nr. / Project–No.		Bemerkung / Comments	Boltset for Installation 6xBolt M12x60 mm, A2F80 (75Nm) 6xflatwasher for M12, A2
Änderung / Revision	Datum / Date		
LL–Bezug / LL–Reference			

A= ø33,91
B=
C=
D=

	Datum/Name Date/Name	Gewicht Weight	Kg
gez. drawn	07.02.1998 Schuster	Maßstab Scale	1:4
gepr. appr.	22.06.1998 Bily	Werkzeuge früher	vorh.
Bauteil–Nr. Components			

LORÜNSER AUSTRIA

DRAFT

Legend 28.93

Legend 28.93a

This drawing and all data contained therein is legal and intellectual property of LORÜNSER Austria GmbH and must not be altered or transmitted to any third party without our written consent.

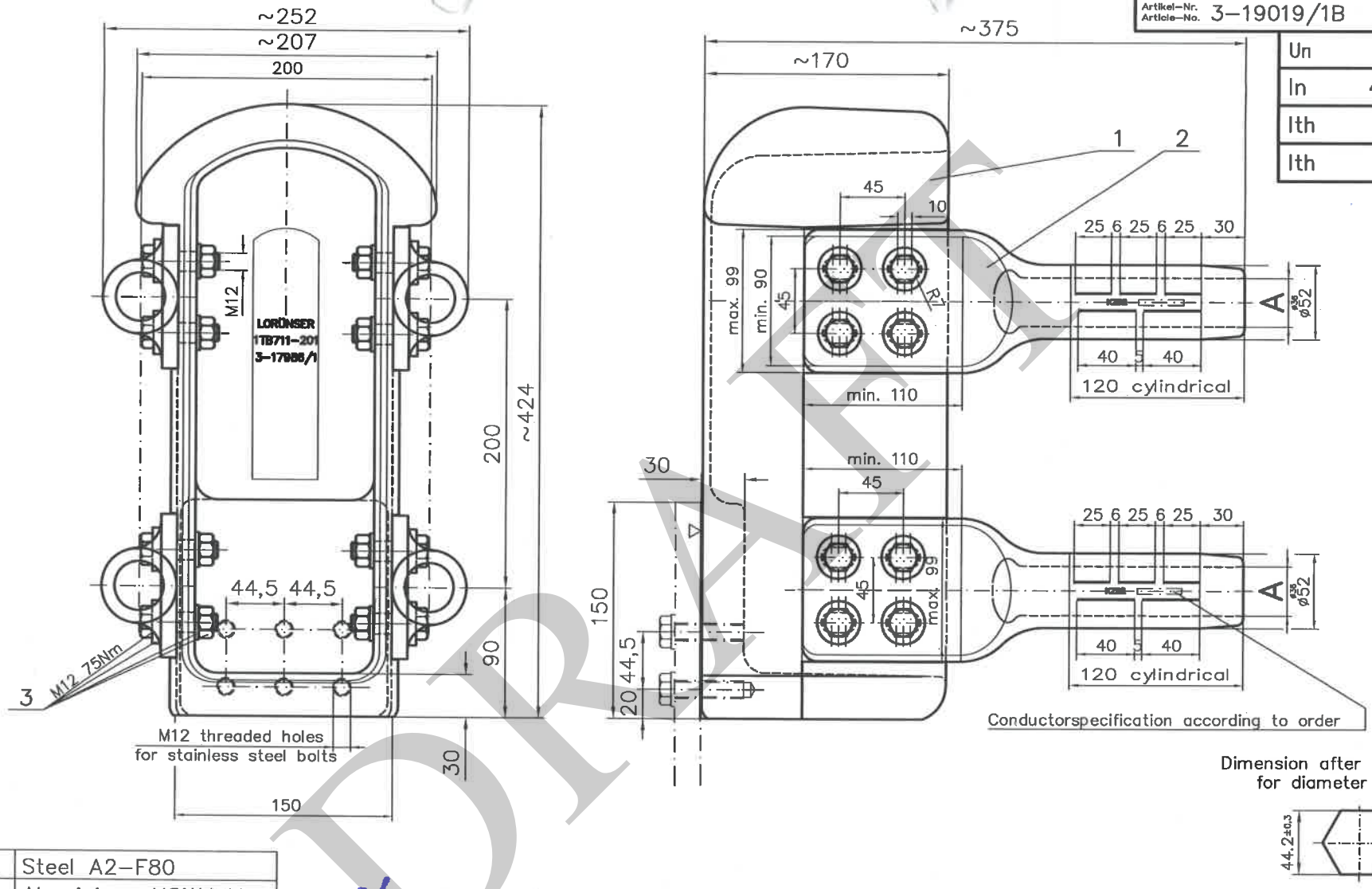

Dimension after compression for diameter A (KZ52)

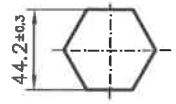

Pos.	Material
3	Steel A2-F80
2	Aluminium AlSi1MgMn
1	Aluminium G-AlSi7Mg

Artikel-Nr. Article-No.	3-19019/1B
Un	525 kVAC
In	4000 A
Ith	50 kA1s
Ith	28,9 kA3s

Ch Mypchalen

AL-90°-Quadruple-Compression-Flat-Terminal

Artikel-Nr. Article-No. 3-19019/1B

Positions-Nr. Position-No.	3-6	Kundenprojekt Nummer Customer Project Number	Nam Theun 2 Hydroelecrtic Project
Projekt-Nr. Project-No.		Bemerkung Comments	Boltset for Installation 6xM12x50 mm, A2F80 (75Nm) 6xflatwasher for M12, A2
Änderung Revision	Datum Date		
LL-Bezug LL-Reference			

A= ø33,91
B=
C=
D=

	Datum/Name Date/Name		
gez. drawn	17.07.1997 Schuster	Gewicht Weight	Kg
gepr. appr.	17.07.1997 Bily	Maßstab Scale	1:4
		Werkzeuge früher	vorh.

Bauteil-Nr. Components

LORÜNSER AUSTRIA

DRAFT

Legend 28.95a

This drawing and all data contained therein is legal and intellectual property of LORÜNSER Austria GmbH and must not be altered or transmitted to any third party without our written consent.

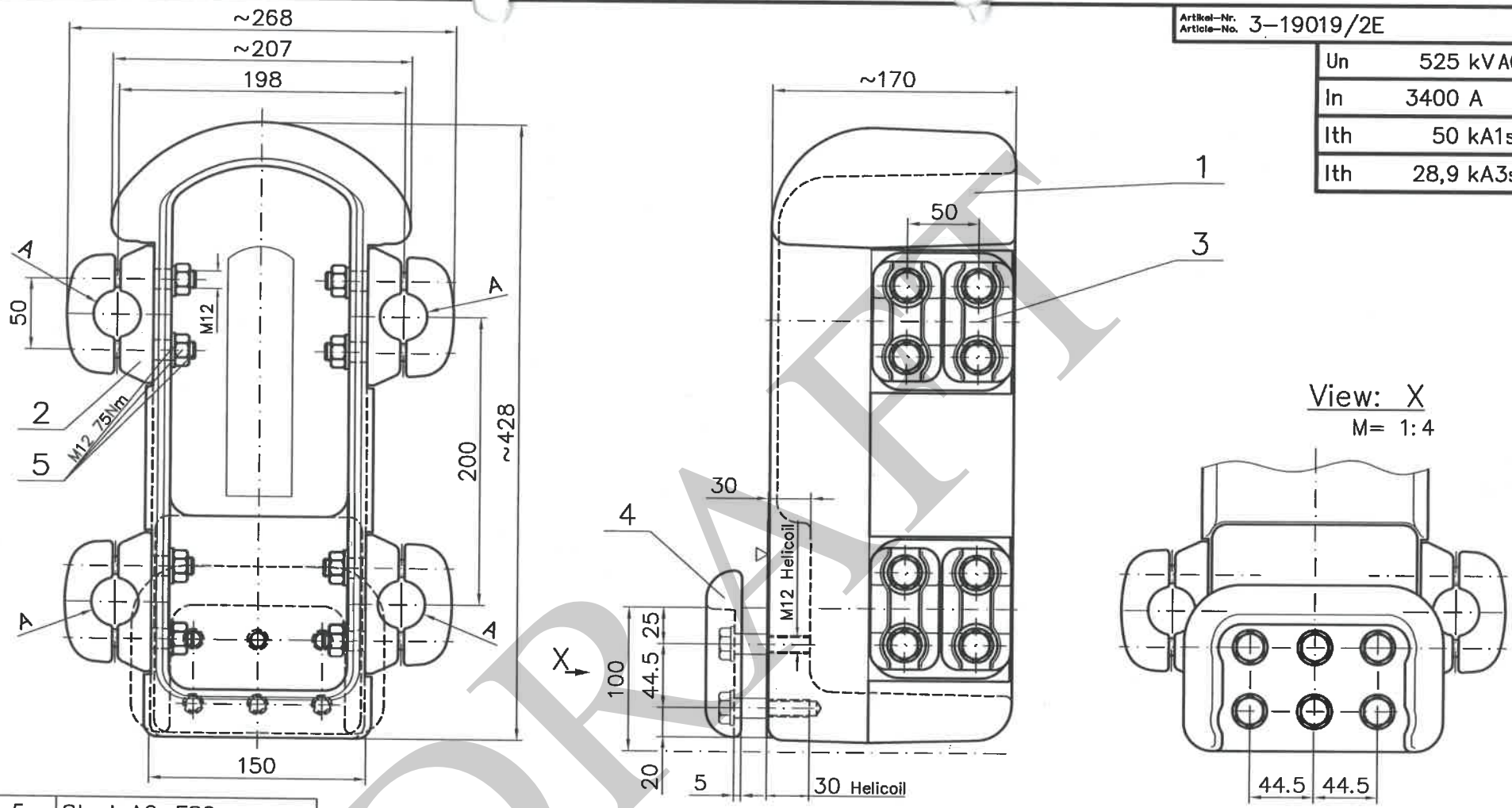

Artikel-Nr. Article-No.	3-19019/2E
Un	525 kV AC
In	3400 A
Ith	50 kA1s
Ith	28,9 kA3s

Pos.	Material
5	Steel A2-F80
4	Aluminium G-AlSi7Mg
3	Aluminium AlMgSi F30
2	Aluminium AlSi1MgMn
1	Aluminium G-AlSi7Mg

Ch Mypchalm

DRAFT

AL-90°-Quadruple-Flat-Terminal

Positions-Nr. Position-No.	3-7	Kundenprojekt Nummer Customer Project Number	Nam Theun 2 Hydroelecrtic Project
Projekt-Nr. Project-No.		Bemerkung Comments	Boltset for Installation 6xM12x55 mm, A2F80 (75Nm) 6xflatwasher for M12, A2
Änderung Revision	Datum Date		
LL-Bezug LL-Reference			

A=ø33,91
B=
C=
D=

Datum/Name Date/Name | Nr. No.

Artikel-Nr. Article-No.	3-19019/2E		
	Datum/Name Date/Name	Gewicht Weight	Kg
gez. drawn	14.01.2002 Matt	Maßstab Scale	1:4
gepr. appr.	14.01.2002 Matt	Werkzeuge früher	vorh.
Bauteil-Nr. Components			

LORÜNSER AUSTRIA

Legend 28.92, 28.96a

This drawing and all data contained therein is legal and intellectual property of LORÜNSER Austria GmbH and must not be altered or transmitted to any third party without our written consent.

Artikel-Nr. / Article-No. 3-19019/3

Un	525 kV AC
In	3400 A
Ith	50 kA1s
Ith	28,9 kA3s

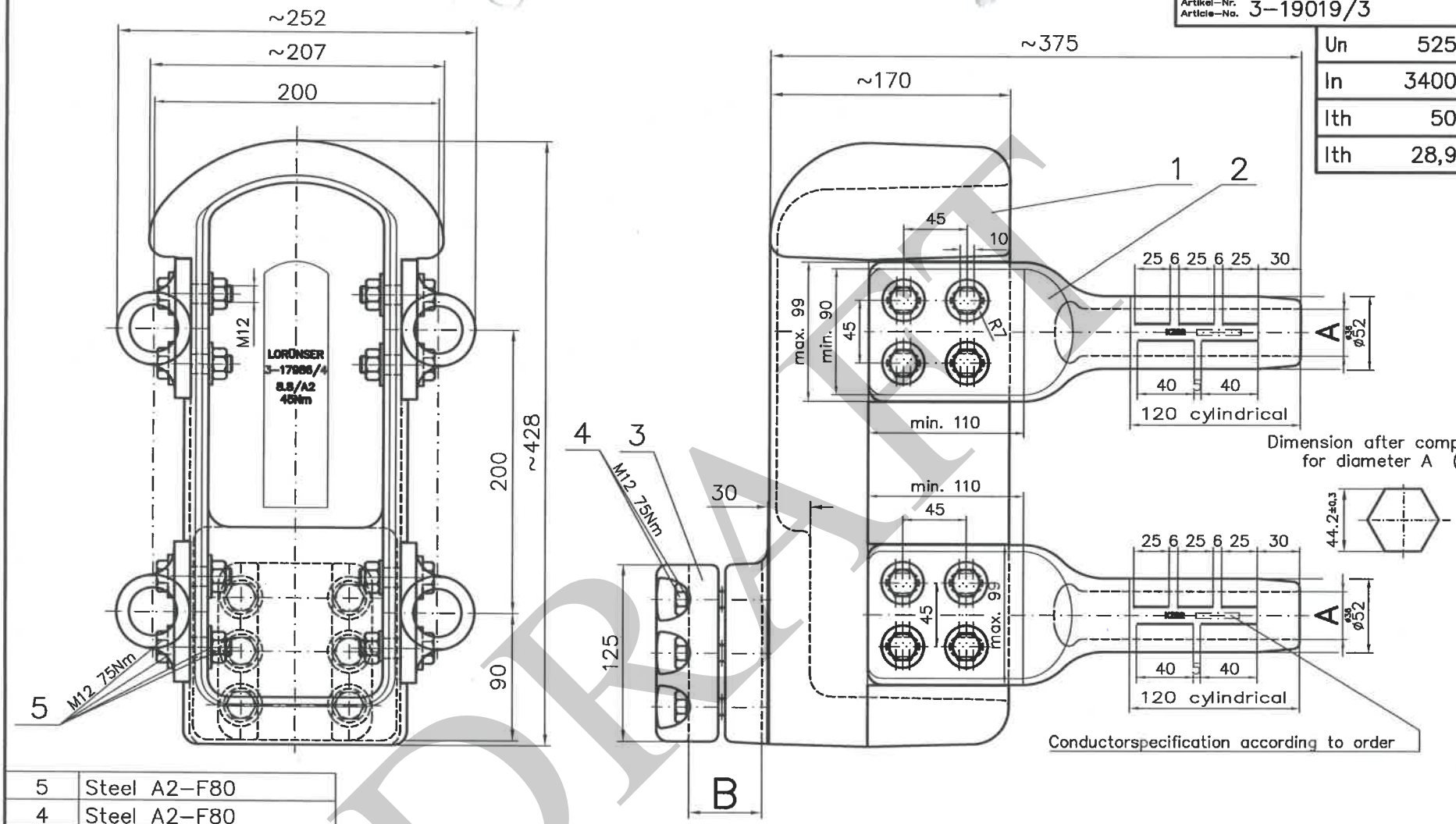

Pos.	Material
5	Steel A2-F80
4	Steel A2-F80
3	Aluminium G-AlSi7Mg
2	Aluminium AlSi1MgMn
1	Aluminium G-AlSi7Mg

Ch Mupchalum

28.99A

DRAFT

AL-90°-Quadruple-Compression-Connector

Artikel-Nr. / Article-No. 3-19019/3

Positions-Nr. / Position-No.	3-8	Kundenprojekt Nummer / Customer Project Number	Nam Theun 2 Hydroelectirc Project
Projekt-Nr. / Project-No.		Bemerkung / Comments	
Änderung / Revision	Datum / Date		
LL-Bezug / LL-Reference			

A= ø33,91
B= ø60
C=
D=

	Datum/Name Date/Name	Nr. No.
d	17.10.2005 Fessler J.	569

	Datum/Name Date/Name	Gewicht Weight	Kg
gez. drawn	12-11-1997 Graz Martin	Maßstab Scale	1:4
gepr. appr.	12-11-1997 Bily	Werkzeuge früher	vorh. PBNR: 274
Bauteil-Nr. Components			

LORÜNSER AUSTRIA

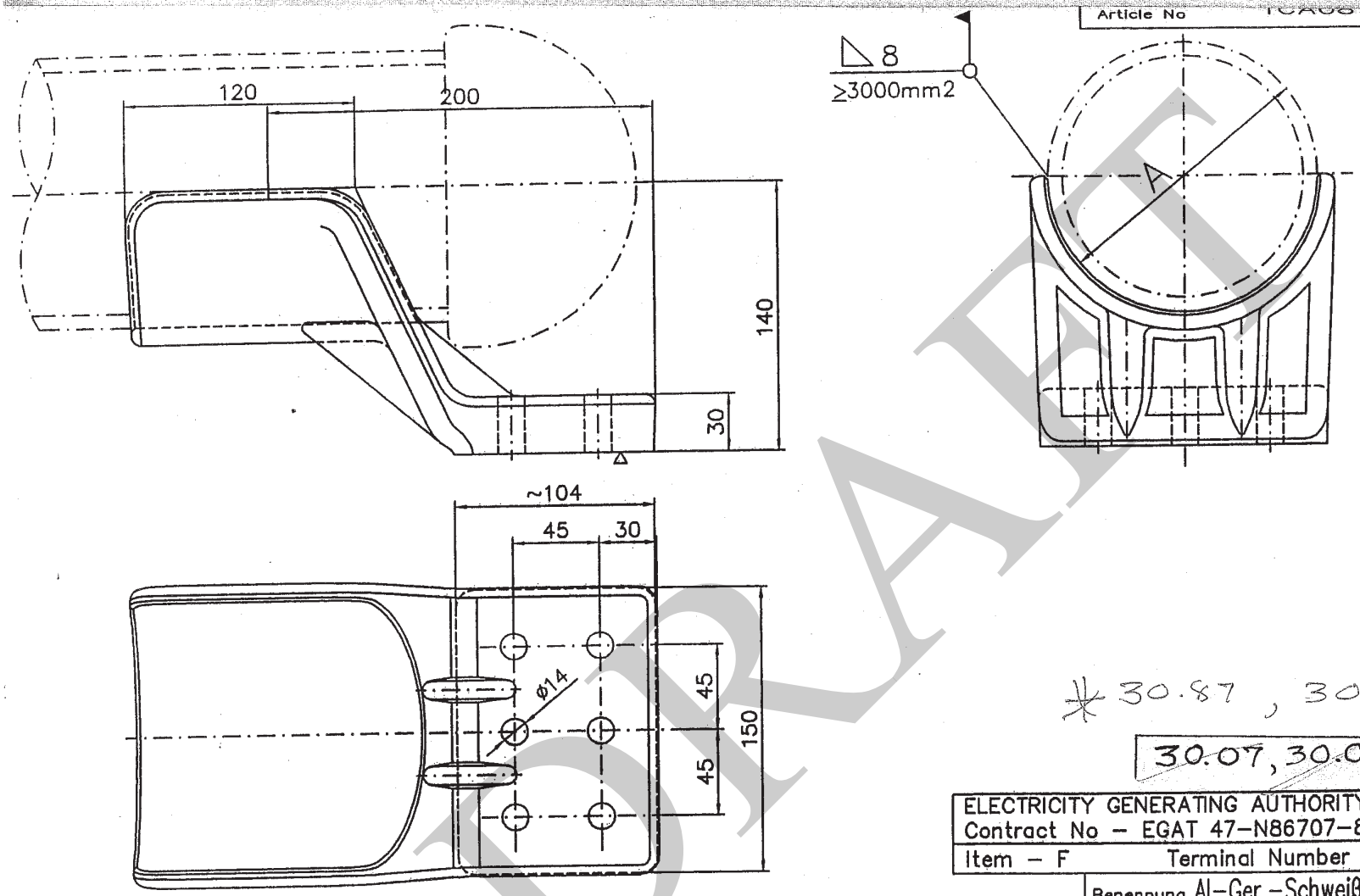

Article No 1CA081-143

Un	525	kV
In	4000	A
Ith	50	kA1s

*30.87, 30.87a

30.07, 30.07a

ELECTRICITY GENERATING AUTHORITY OF THAILAND
Contract No – EGAT 47–N86707–8–2–30(43)IPPE–S1
Item – F Terminal Number – 30.07

Benennung Al–Ger.–Schweiß–Flachanschlußklemme
Description Al–Str.–Welded–Flat Terminal

Änd. Rev.	Was geändert Description	gez., Datum drawn, Date	A= ø141,3	gez.: drawn:	31–07–2001	Galehr	Artikel Nr Article No. 1CA081–143
			B=	gepr.: checked:	31–07–2001	M. Janßen	Änderungen Revision
			C=	M=1:3		~3,23kg	LORÜNSER LEICHTMETALL
			D=			vorh.	

DRAFT

Corona end cap shall be provided for this legend.

W11W-148	
Un	550 [kV]
In	2000 [A]
Ith	50 [kA1s]
BL >	–[kN]

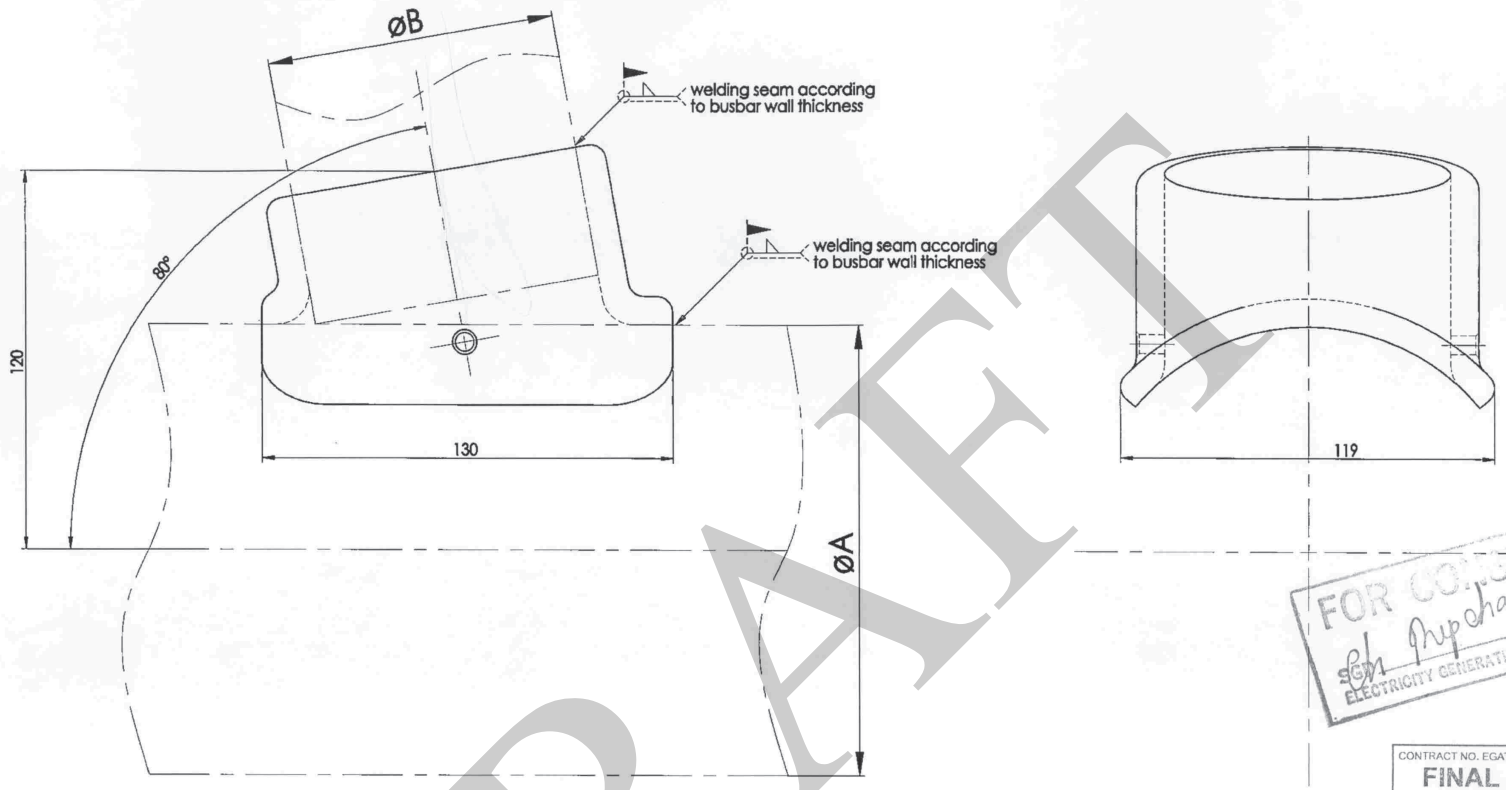

FOR CONSTRUCTION
DATE 15 OCT 2010
ELECTRICITY GENERATING AUTHORITY OF THAILAND

CONTRACT NO. EGAT 47-050681-2-2-30(52)IPPE-S2
FINAL DRAWING
09 AUG 2010
ABB Doc.No. ABB/EGAT-PD/ T0138

Drawing is subjected to technical revisions !

DRAFT

Contract No: EGAT 47-050681-2-2-30(52) IPPE-S2

Item	Qty.	Description	Drawing	Material	Blank	Rem.
1	1	Angle-T-Connector	BA04353-01	AC-AlSi7Mg0,3S-F	RA04353-01	

We reserve all rights in this document and in the information contained therein. Reproduction, use or disclosure to third parties without express authority is strictly forbidden.

Dimensions w/o tolerances as cast: GTA 15/5 DIN1688T1 machined DIN ISO2768 f m c v

CAD-drawing

Surface finish DIN ISO 1302 R2

		Date	Name
A=	ø141,3		
B=	ø88,9	Drawn	21-11-2008 Günther
C=	ø	Checked	28-04-2009 Günther
D=	ø	Scale 1:1.5	Weight (kg) 0.5941

Rev.	Revision No.	Name	Date
-	Erstfreigabe	Günther	28-04-2009

Origin: RIBE subcon

Winkel-T-Klemme
Angle-T-Connector

Art.No:	W11W-148		Format	Sheet No.
Dwg.No:	BA04353	Rev: -	A3	1 of 1
Replaced dwg.		Replaced by		

Status: FREIGEGEBEN

Item	Customer:	EGAT
39.48a	Project:	IPPE-S2, 500kV Pluak Daeng

SubCon

W21W-148	
Un	550 [kV]
In	4000 [A]
Ith	50 [kA1s]
BL >	–[kN]

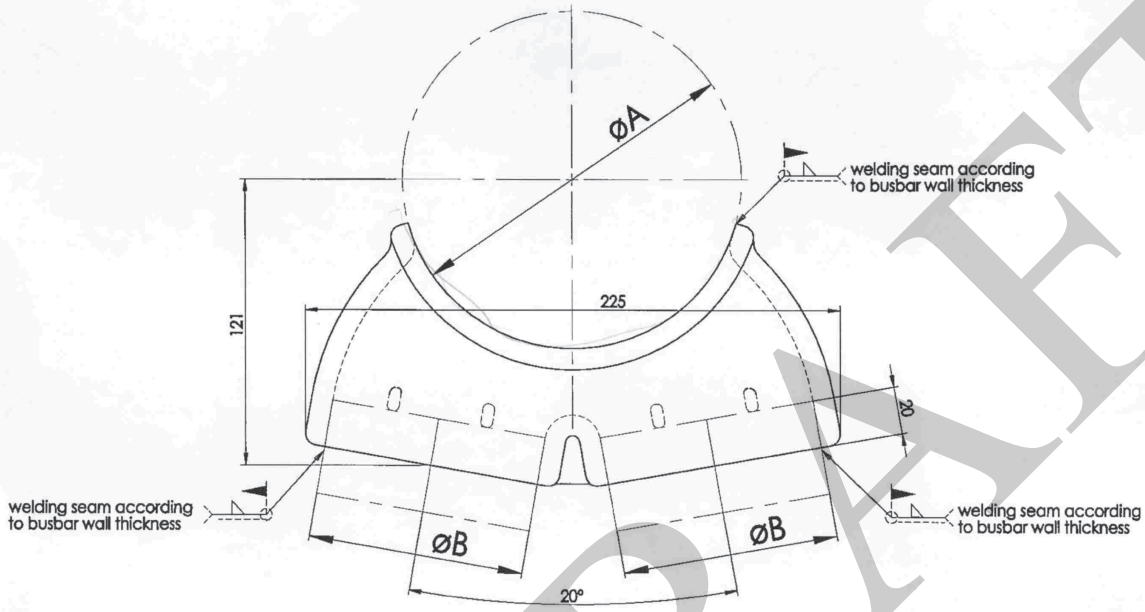

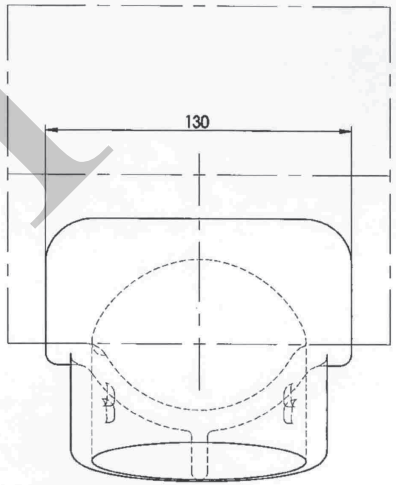

CONTRACT NO. EGAT 47-050681-2-2-30(52)IPPE-S2
FINAL DRAWING
09 AUG 2010
ABB Doc.No. ABB/EGAT-PD/ T0188

FOR CONSTRUCTION
Sch Prapchalun
DATE 15 OCT 2010
ELECTRICITY GENERATING AUTHORITY OF THAILAND

Drawing is subjected to technical revisions !

DRAFT

Item	Qty.	Description	Drawing	Material	Blank	Rem.
1	1	Al-Angle-V-Connector	BA04356-01	AC-AlSi7Mg0,3S-F	RA04356-01	

We reserve all rights in this document and in the information contained therein. Reproduction, use or disclosure to third parties without express authority is strictly forbidden.

Dimensions w/o tolerances: as cast: GTA 15/5 DIN1688T1 machined DIN ISO2768 f m c v

CAD-drawing

Surface finish DIN ISO 1302 R2

A= ø141,3
B= ø88,9
C= ø
D= ø

	Date	Name
Drawn	21-11-2008	Günther
Checked	28-04-2009	Günther
Scale 1:2		Weight (kg) 1.2064

Rev.	Revision No.	Name	Date
-	Erstfreigabe	Günther	28-04-2009

Al-Winkel-V-Verbinder
Al-Angle-V-Connector

Contract No: EGAT 47-050681-2-2-30(52) IPPE-S2

Item	Customer:	EGAT
41.53a	Project:	IPPE-S2, 500kV Pluak Daeng

SubCon

RIBE subcon

Origin:

Art.No:	W21W-148		Format	Sheet No.
Dwg.No:	BA04356	Rev: -	A3	1 of 1
Replaced dwg.		Replaced by		

Status: FREIGEGEBEN

Artikel Nr.
Article No 1RB100-090

** 420kV In Exposed Position
500kV in Protected Position

Un	**	kV
In	---	A
Ith	--	kA1s

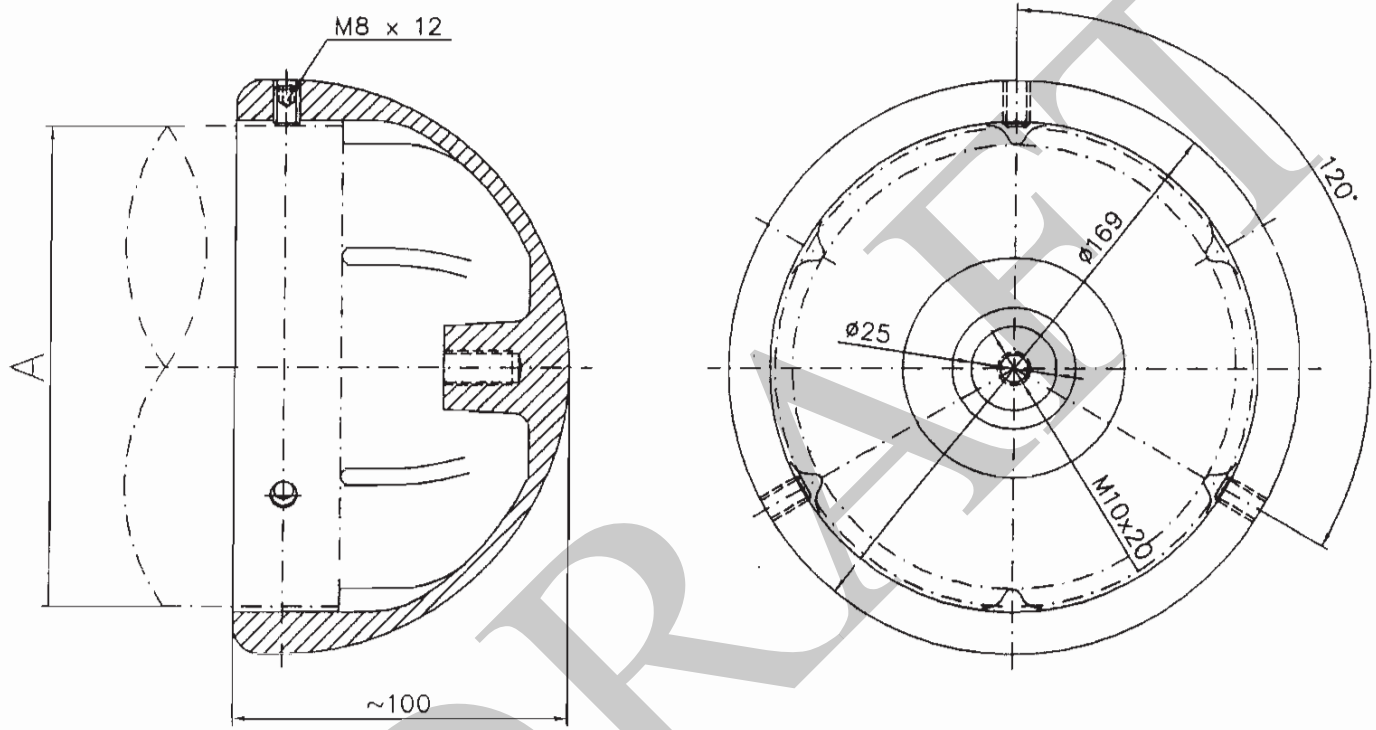

This drawing and all data contained therein is legal and intellectual property of LORÜNSER Leichtmetallwerk GmbH and must not be altered or transmitted to any third party without our written consent.

DRAFT

ELECTRICITY GENERATING AUTHORITY OF THAILAND
Contract No - EGAT 47-N86707-8-2-30(43)IPPE-S1

Item - C | Terminal Number - 45.58

LEGEND 45.93 A

Benennung Verschlusskappe
Description Corona Spheroid

Änd Rev	Was geändert Description	gez., Datum drawn, Date				
			A=ø141.3	gez.: drawn:	27.09.2001	Matt
			B=	gepr.: checked:	27.09.2001	Matt
			C=	M= 1:2		
			D=			

Artikel Nr. Article No. 1RB100-090
Änderungen Revision

LORÜNSER LEIGHTMETALL

Artikel Nr. / Article No	1QA102–040

Un	420	kV
In	---	A
Ith	---	kA1s

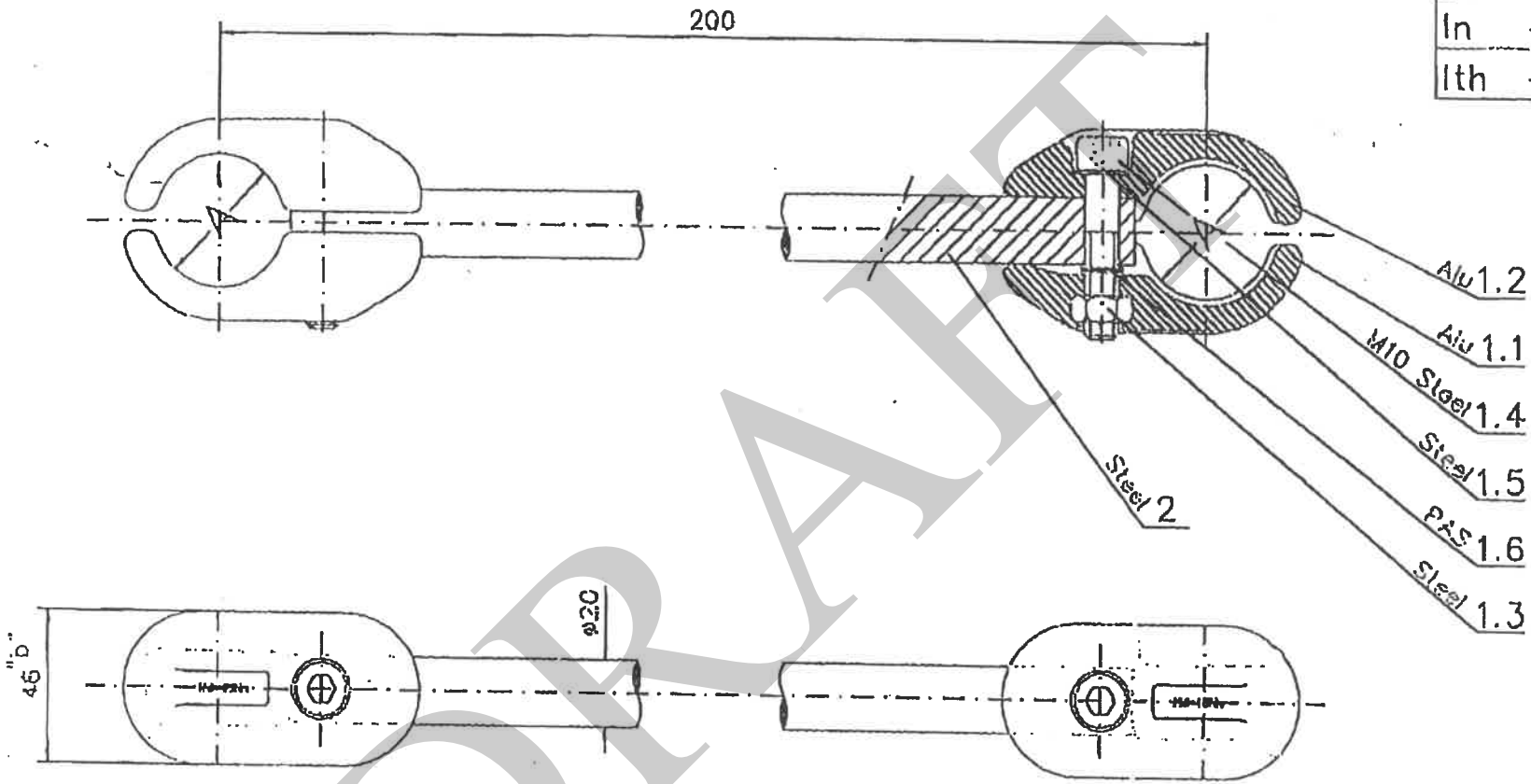

DRAFT

ITEM 155

Änd. Rev.	Was geändert Description	gez., Datum drawn, Date	A= ø30–44	gez.: drawn:	16–10–1990	Schuster
"a"	Pos.-kY	Bily 7.4.89	B=	gepr.: checked:	16–10–1990	Bily
"b"	Mass 50au(46+Pos	Jozbec 16.10.90	C=			
"c"	Änd-Nr. 396	Golehr 7.12.99	D=	vorh.	M=1:2	

Benennung	Al–Feldabstandhalter
Description	Al–Spacer
Artikel Nr. / Article No.	1QA102–040
Änderungen / Revision	"a" "b" "c"

LORUNSER LEICHTMETALL

Legend 47.15a

Q4K-203		
Un	550	[kV]
In	--	[A]
Ith	50	[kA1s]
BL min.	--	[kN]

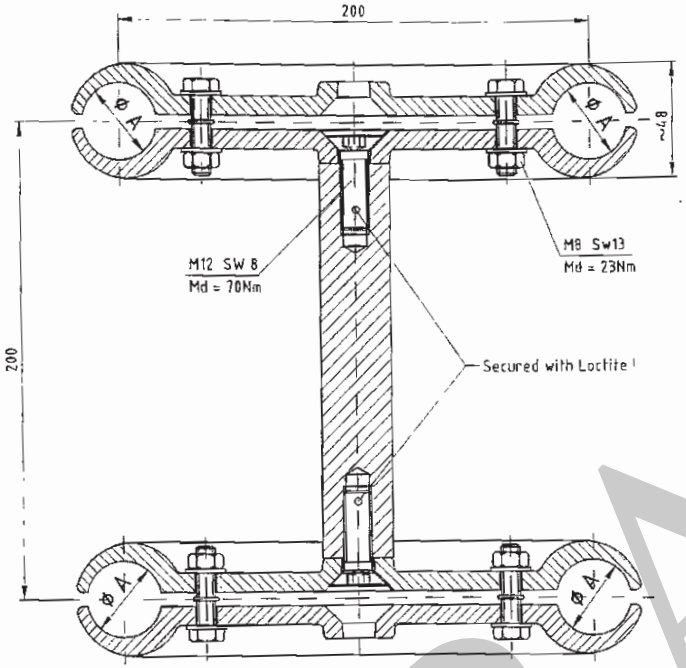

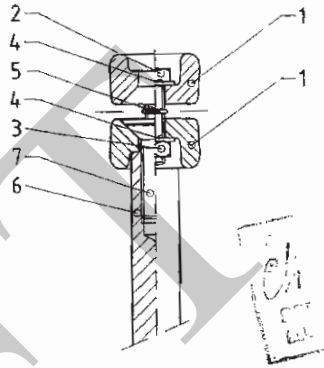

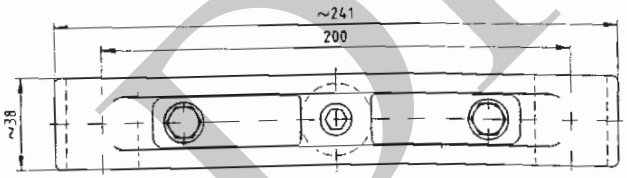

CONTRACT NO EGAT 47-050681-2-2-40(52)PPE-S2
FINAL DRAWING
09 AUG 2010
ABB Doc.No. ABB/EGAT-PD/T0178

Drawing is subjected to technical revisions !

Part	Description	Material
7	Countersunk Head Screw M12x40	A2F70
6	Distance part	Al
5	Locking washer 8	Elastomere
4	Washer 8,4	A2
3	Nut M8	A2-80
2	Hexagonal screw M8x35	A2F80
1	Body	AC-AlSi7Mg0,3SF

A= Ø33,91 ▽
B= -
C= -
D= -

Dimensions w/o tolerances as cast GTA 15/5 DIN 68871 machined DIN ISO 2768 f m c v

CAD-Drawing
Surface finish DIN ISO 1302 Row 2

	Date	Name
Draw.	02.04.2007	G.Schuster
Appr.	02.04.2007	LB
Scale 1:2		Weight kg

4er-Bündel-Abstandhalter
Quadruple-Spacer
-
-
-

We reserve all rights in this document and in the information contained therein. Reproduction, use or disclosure to third parties without express authority is strictly forbidden

Revision Description		Date
"a" 1x Loctite	LB	20070823

RIBE subcon
Origin

Article No.	Q4K-203
Drawing No	BA03476
Replaced DWG	
Revision	a
Format	A3

LEGEND 47 22 a

Item	Customer	EGAT
47 22a	Project	IPPE-S2, 500kV Pluak Daeng

SubCon

DRAFT

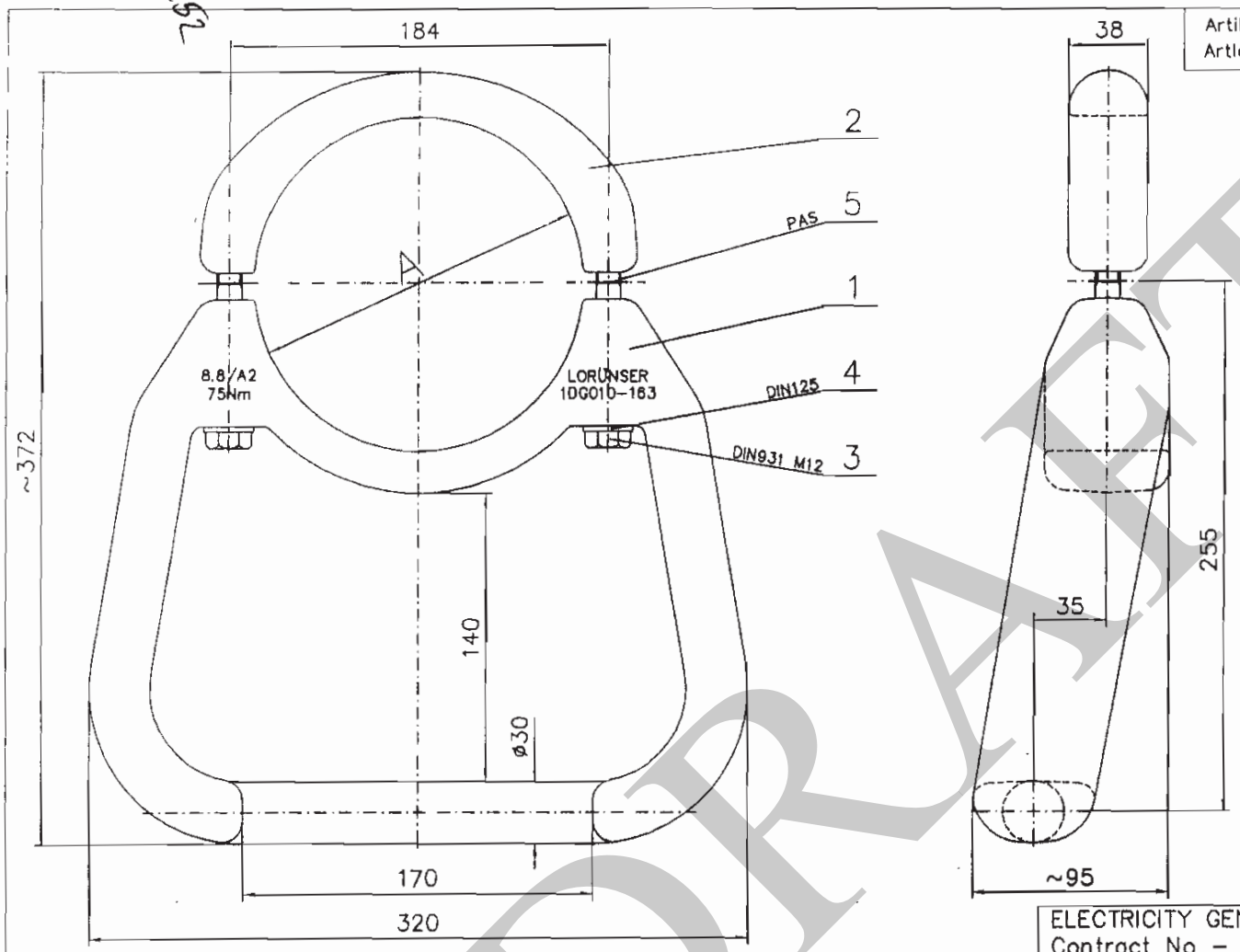

Artikel Nr. / Article No	1DG010-163
Un	525 kV
In	--- A
Ith	50 kA1s

LEGEND 48.04A

ELECTRICITY GENERATING AUTHORITY OF THAILAND
Contract No – EGAT 47-N86707-8-2-30(43)IPPE-S1

Item – T | Terminal Number – 47.54

Benennung Al-Erdungsfixpunkt

Description Al-Earthing point

Änd.	Was geaendert	Gez. Datum					
			A= Ø141	gez.:	97-09-05	Hosp	Artikel Nr / Article No. 1DG010-163
			B=	gepr.	97-09-05	Bily	Änderungen / Changes
			C=	M=1:3			LORÜNSER LEICHTMETALL
			D=			vorh.	

DRAFT

This drawing and all data contained therein is legal and intellectual property of LORÜNSER Leichtmetallwerk GmbH and must not be altered or transmitted to any third party without our written consent.

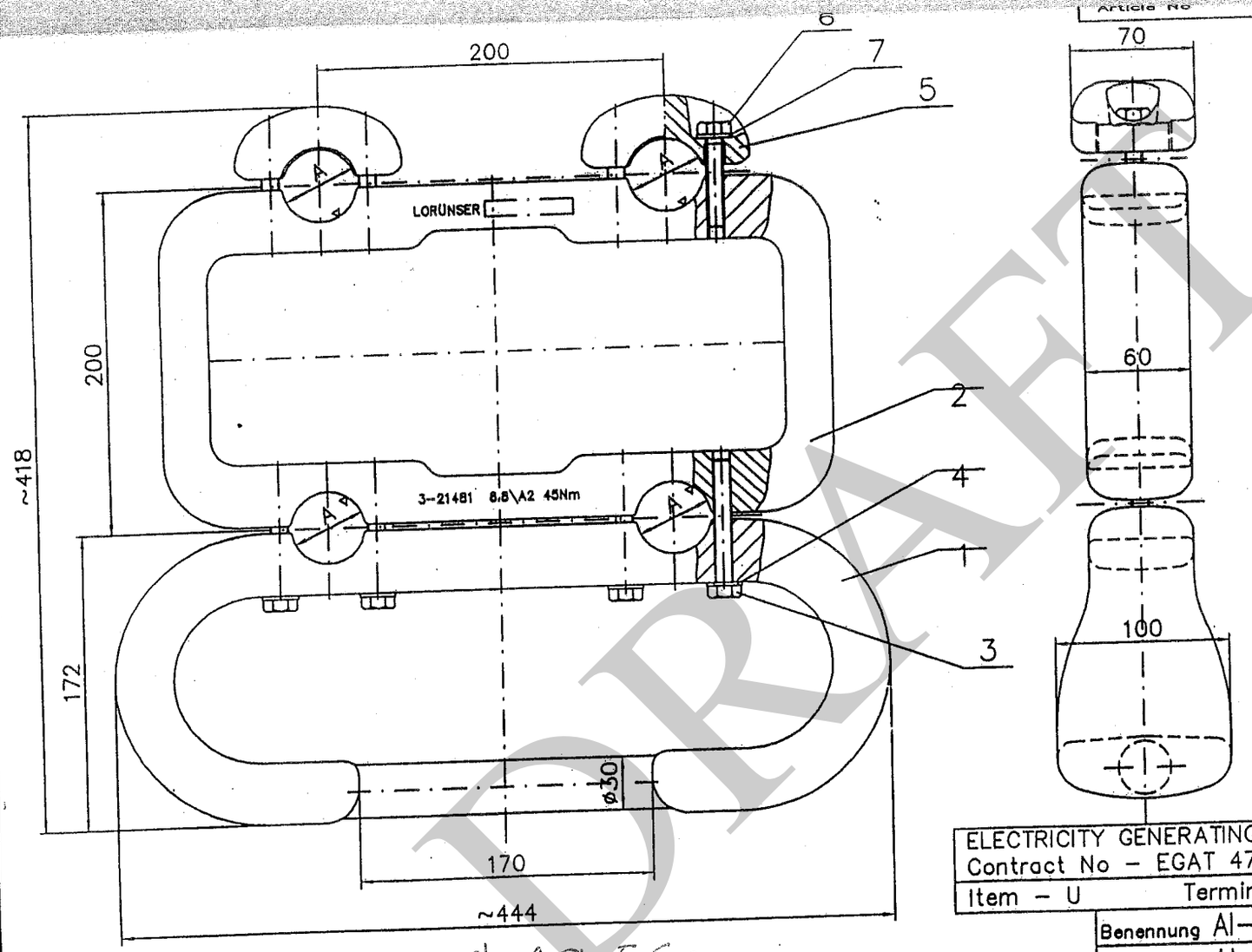

Un	525	kV
In	---	A
Ith	50	kA1s

ELECTRICITY GENERATING AUTHORITY OF THAILAND
Contract No – EGAT 47-N86707-8-2-30(43)IPPE-S1
Item – U Terminal Number – 47.54

47.64a * 49.56a

Änd. Rev.	Was geändert Description	gez., Datum drawn, Date	A=ø30-42	gez.: drawn:	13-11-2001	Pichler
			B=	gepr.: checked:	13-11-2001	Pichler
			C=	M=1:3.5		
			D=			vorh.

Benennung Al-Erdungsfixpunkt f. 4er Bündel
Description Al-Earthing Point f. 4er Bundle
Artikel Nr Article No. 1HG407-041
Änderungen Revision

LORÜNSER LEICHTMETALL

DRAFT

BURNDY do BRASIL	BUS SUSPENSION CLAMP CHS20A	Fl. de Fls. R

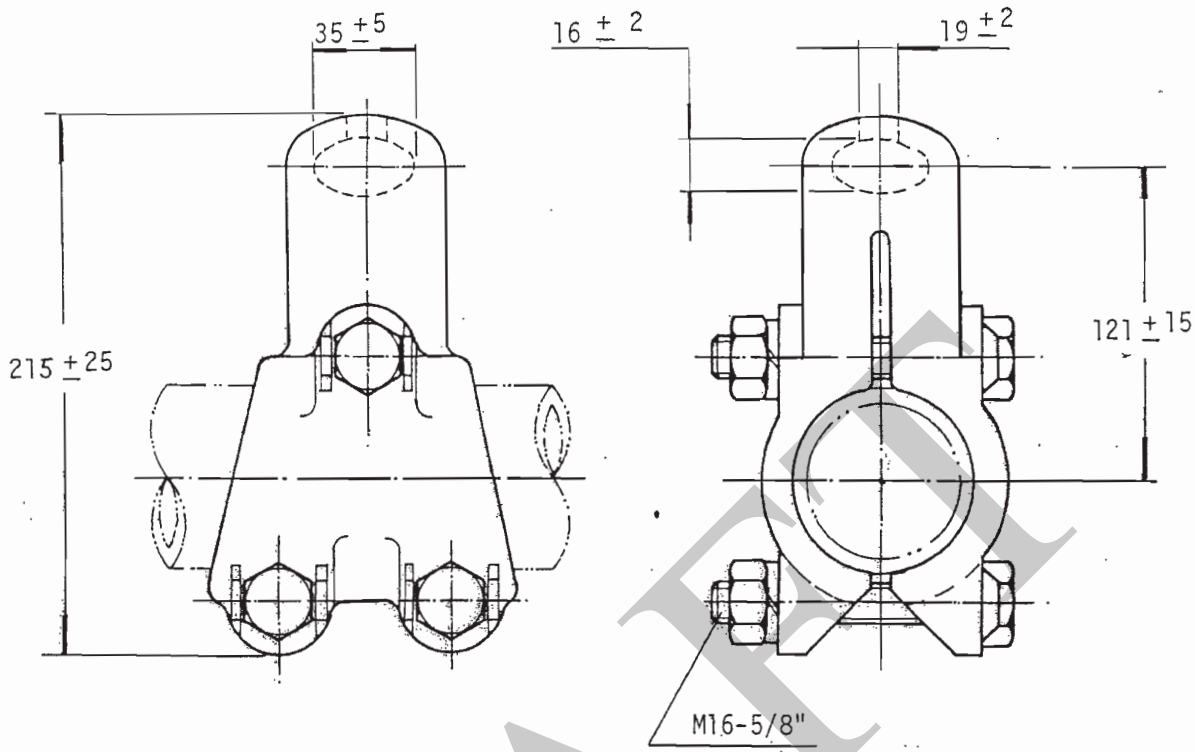

APPLICATION: Aluminum tube 3" IPS

INSTALLATION: Bolted

MATERIAL: Body and cap: Cast aluminum alloy
Bolts, nuts and lockwashers: Aluminum alloy

TIGHTENING TORQUE: 5,5 mkgf(5/8") - M16

LETTERING: BURNDY
CHS20A

ATE ADVANCED TECHNOLOGY EQUIPMENT
Tel : 643-0982, 246-2242

Dimensions in mm, for reference only.

Data	Des	Ver	Aprov.	
06.25.92				Material revised
10.20.88				SUBSTITUIÇÃO DE

SAC - 78038-E

DRAFT

BURNDY

BUS SUPPORT
UHKR16A-5

Fl. de Fls. R

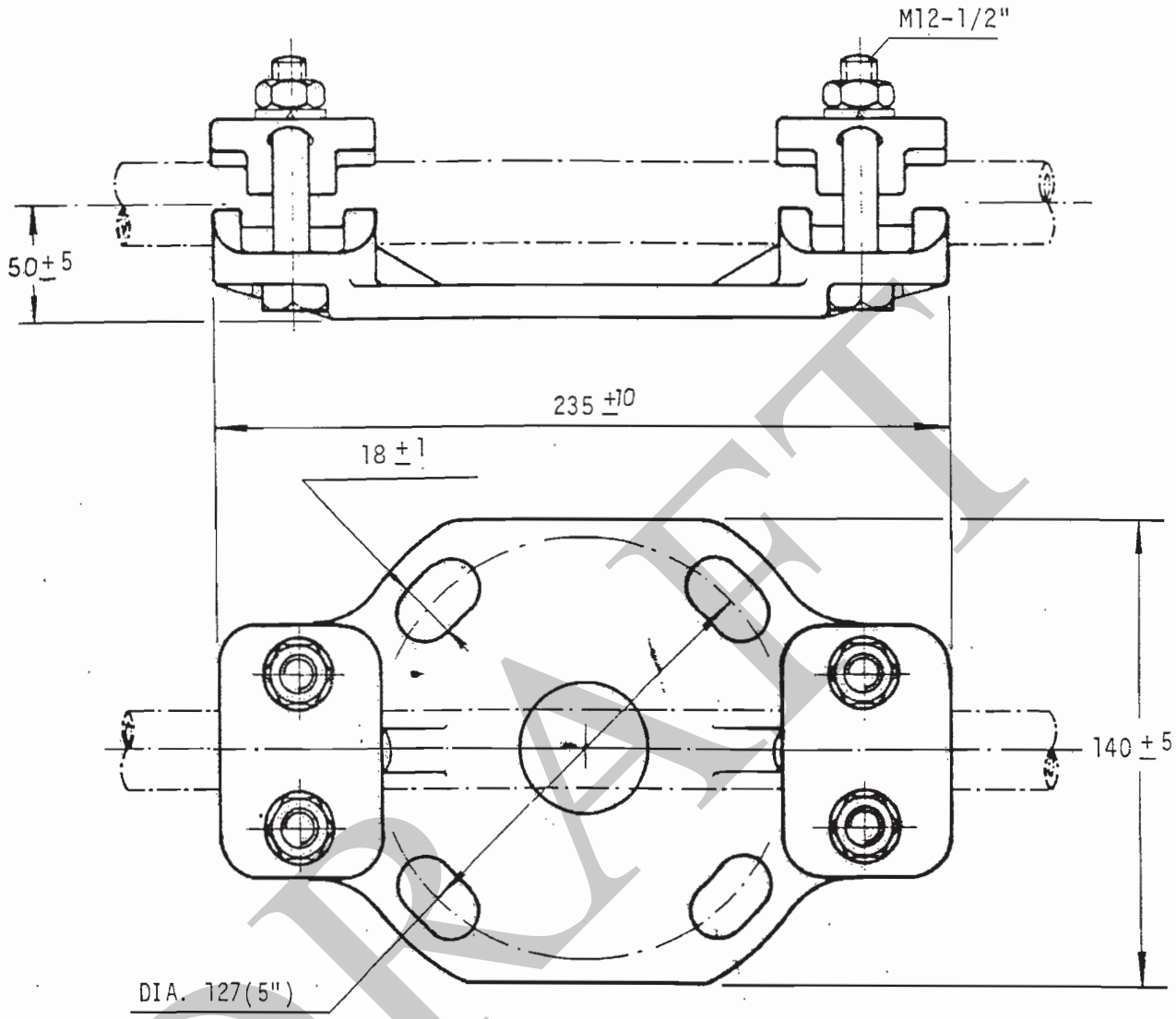

APPLICATION: 1200-2000 MCM-AL or 1113-1780 MCM-ACSR
Aluminum tube 1-1 1/4" IPS

INSTALLATION: Bolted

TIGHTENING TORQUE: 3,5 mkgf(1/2") - 3,0 mkgf (M12)

MATERIAL: Body and caps: Cast aluminum alloy
Bolts, nuts and washers: Aluminum alloy

ATE ADVANCED TECHNOLOGY EQUIPMENT
Tel : 643-0982, 246-2242

LETTERING: BURNDY
UHKR16A-5

NOTE: When the letter "B" is added to the catalog number, the connector will be supplied with hardware for fixing to base of insulator.
EX: UHKR16A-5B

Dimensões em mm, apenas para referência.

Data	Des.	Ver.	Aprov.	SUBSTITUIÇÃO DE

DRAFT

BURNDY do BRASIL

DOUBLE BUS SUPPORT
U2HKR...A-..

Fl. de Fls. R

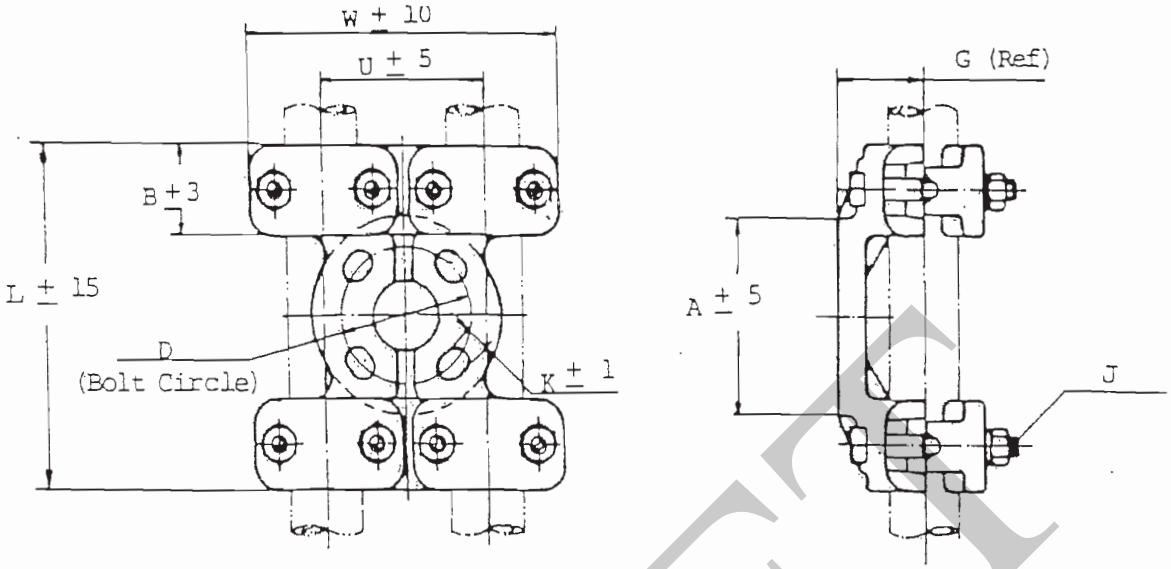

CATALOG NUMBER	ACCOMMODATION			DIMENSIONS								
	CABLE ASC	CABLE ACSR	TUBE IPS	A	B	D	G	J	K	L	U	W
U2HKR11A-3	4 SOL	6-4/0 (6/1)	1/4"	129	51	76,2	30	M12	14			
U2HKR11A-5	4/0 AWG			174	51	127	30	M12	18			
U2HKR13A-3	250	266,8(6/7)	3/8"	129	51	76,2	33	M12	14	200	85	160
U2HKR13A-5	550 MCM	477 (30/7)	1/2"	174	51	127	33	M12	18			
U2HKR14A-3	600	556,5 (26/7)	3/4"	129	51	76,2	44	M12	14	200	90	170
U2HKR14A-5	1113MCM	1033,5(54/7)		174	51	127	44	M12	18			
U2HKR16A-3	1200	1113 (54/19)	1"	129	51	76,2	49	M12	14	200	95	180
U2HKR16A-5	2000MCM	1780 (84/19)	1.1/4"	174	51	127	49	M12	18	245	95	180
U2HKR14A-5-20	600 1113 MCM	556,5 (26/7) 1033,5 (54/7)	3/4"	174	51	127	44	M12	18		200	280

LEGEND

13.73
13.68

APPLICATION: Double bus support for mounting a wide range of cable or tube on post or pedestal type insulators

INSTALLATION: Bolted

MATERIAL: Body and caps: Cast aluminum alloy
Bolts and nuts: Aluminum alloy
Lockwashers: Steel hot dip zinc coated (ASTM A153)

LETTERING: (typical) BURNDY
U2HKR14A-3

ATE ADVANCED TECHNOLOGY EQUIPMENT
Tel: 643-0862, 246-2242

NOTE: When the letter "B" is added to the catalog number, the connector will be supplied with hardware for mounting to base of insulator.
EX: U2HKR14A-3B

Dimensions in mm, for reference only

DRAFT

Data	Des	Ver.	Aprov	SUBSTITUIÇÃO DE	SAU -71927-E
10-18-93					

BURNDY

BUS SUPPORT
WOH18A-5

Fl. de Fls. R

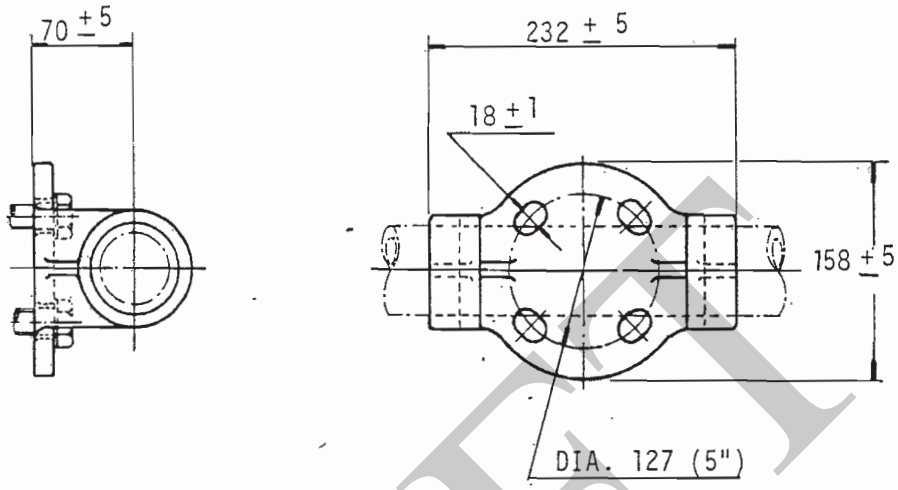

APPLICATION: Bus support for aluminum tube 2" IPS - Bolt Circle 5"

MATERIAL: Cast aluminum alloy

LETTERING: BURNDY
WOH18A-5

NOTE: When the letter "B" is added to catalog number, the connector will be supplied with bolts and washers in steel hot dip zinc coated, for mounting to pad of insulator.
EX: WOH18A-5B

DRAFT

ATE ADVANCED TECHNOLOGY EQUIPMENT
Tel: 643-0882, 246-2242

Dimensions in mm, for reference only.

Data	Des.	Ver.	Aprov.	SUBSTITUIÇÃO DE	SAW - 66687-E
04.24.92					

BURNDY	BUS SUPPORT WOH20A-5	Fl. de Fls. R

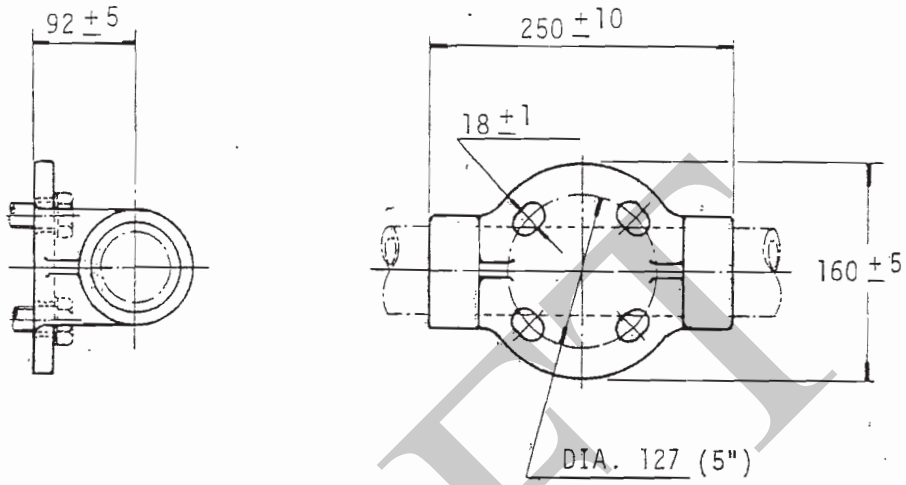

APPLICATION: Bus support for aluminum tube 3" IPS - Bolt Circle 5"

MATERIAL: Cast aluminum alloy

LETTERING: BURNDY
WOH20A-5

NOTE: When the letter "B" is added to catalog number, the connector will be supplied with bolts and washers in steel hot dip zinc coated, for mounting to pad of insulator.
EX: WOH20A-5B

DRAFT

ATE ADVANCED TECHNOLOGY EQUIPMENT
Tel : 643-0982, 246 2242

Dimensions in mm, for reference only.

Data	Des.	Ver.	Aprov.	SUBSTITUIÇÃO DE	SAW - 60153-E

BURNDY do BRASIL	BUS SUPPORT WOH24A-5	Fl. de Fls. R

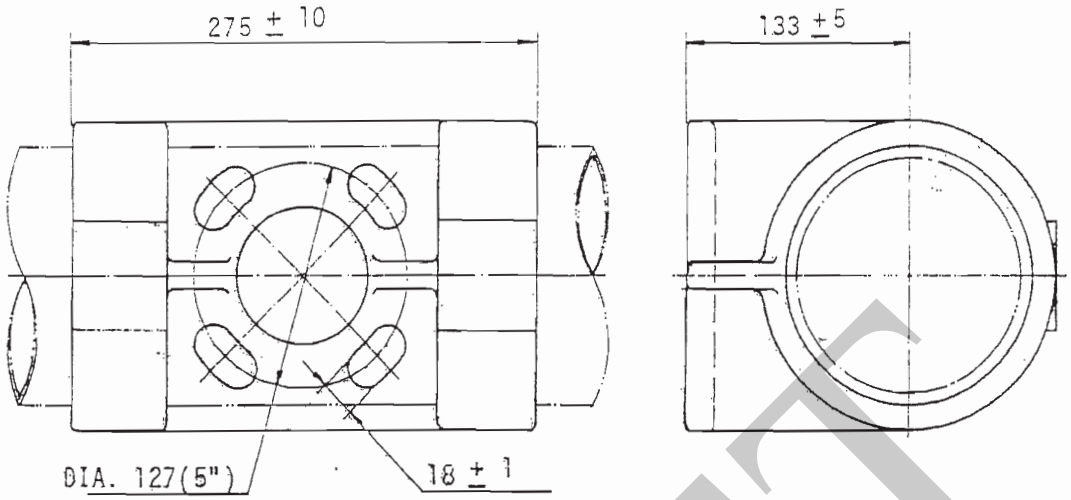

APPLICATION: Bus support for aluminum tube 5" IPS - Bolt Circle 5"

MATERIAL: Cast aluminum alloy

LETTERING: BURNDY
WOH24A-5

NOTE: When the letter "B" is added to catalog number, the connector will be supplied with bolts and washers in steel hot dip zinc coated, for mounting to pad of insulator.
EX: WOH24A-5B

DRAFT

ATE ADVANCED TECHNOLOGY EQUIPMENT
Tel: 643-0982, 246-2242

Dimensions in mm, for reference only.

Data	Des.	Ver.	Aprov.	SUBSTITUIÇÃO DE

BURNDY PRODUCTS	EXPANSION BUS SUPPORT COUPLER **WXHP20A-5-SG**	ITEM 5-17 Fl. DE Fls. R

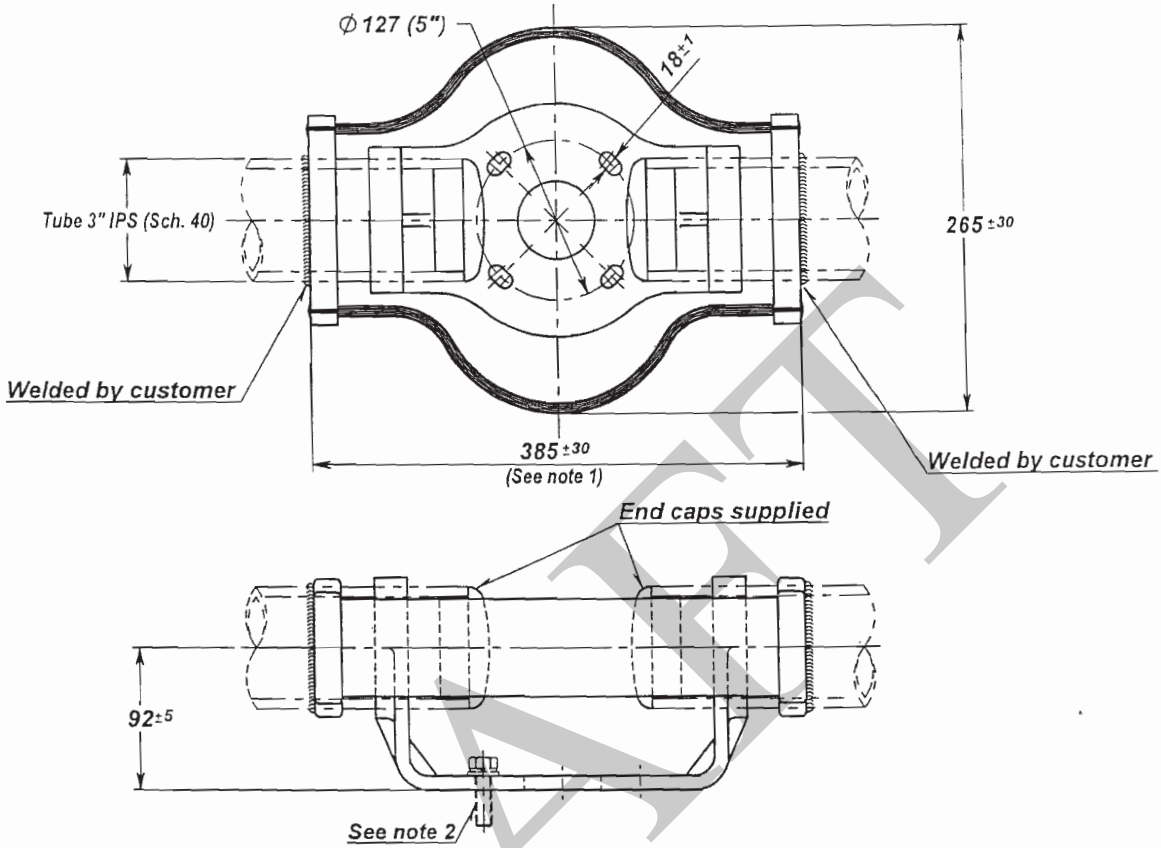

APPLICATION: EXPANSION BUS SUPPORT COUPLER FOR ALUMINUM TUBE 3" IPS (Sch. 40) PEDESTAL TYPE SUPPORT, INSULATOR BASE MOUNTING TO 127mm (5") CIRCLE BASE.

INSTALLATION: WELDED

MATERIAL: BODY, CLAMP AND BASE: CAST ALUMINUM ALLOY (ASTM 356)
FLEXIBLE STRAPS: EC ALUMINIUM

LETTERING: BURNDY
WXHP20A-5-SG
88,9 mm - 3" IPS

Notes: 1-After assembled the connector must expand 25mm máx. for both sides.
2-When the letter "B" is added to the catalog number, the connector will be supplied with bolts (5/8"-11UNC) and washers in steel for fixing to base of insulator Ex: WXHP20A-5B-SG

-The connector performace will be according to NEMA
-Dimensions in mm, for reference only

ATE ADVANCED TECHNOLOGY EQUIPMENT

					R
					R
DATE	Des.	Ver.	Aprov.	SUBSTITUIÇÃO DE	**SAW-86153-E**
11/18/08					

LEGEND 15.55

135

~~152~~

54

16

DRAFT

BURNDY PRODUCTS

EXPANSION BUS SUPPORT COUPLER
WXHP24A-5-SG5

Fl. DE Fls. R

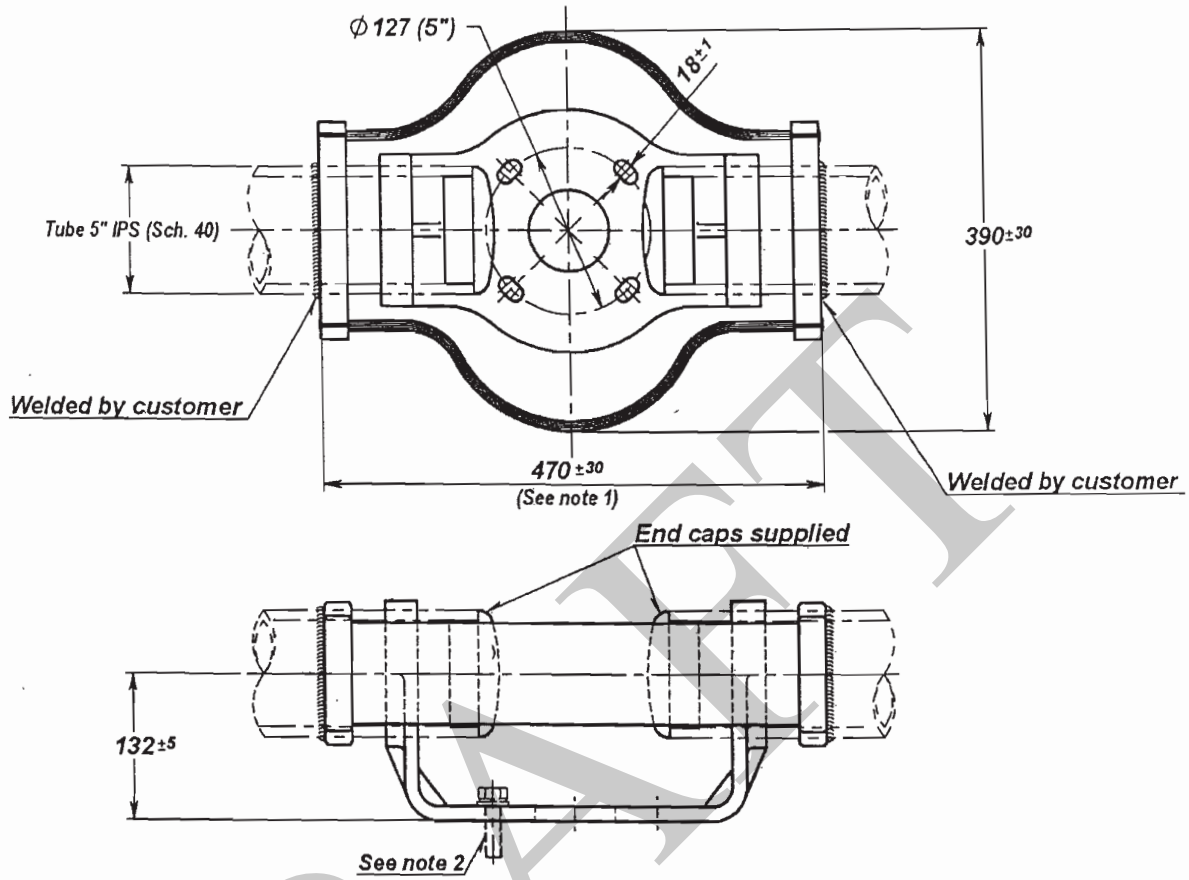

APPLICATION: EXPANSION BUS SUPPORT COUPLER FOR ALUMINUM TUBE 5" IPS (Sch. 40) PEDESTAL TYPE SUPPORT, INSULATOR BASE MOUNTING TO 127mm (5") CIRCLE BASE.

INSTALLATION: WELDED

MATERIAL: BODY, CLAMP AND BASE: CAST ALUMINUM ALLOY (ASTM 356)
FLEXIBLE STRAPS: EC ALUMINIUM

LETTERING: BURNDY
WXHP24A-5-SG5
141 mm - 5" IPS

AMPERE RATING: 3080 A

FOR CONSTRUCTION
19 JUN 2009
DATE
SGD
ELECTRICITY GENERATING AUTHORITY OF THAILAND

Notes: 1-After assembled the connector must expand 25mm max. for both sides.
2-When the letter "B" is added to the catalog number, the connector will be supplied with bolts (5/8"-11UNC) and washers in steel for fixing to base of insulator Ex: WXHP24A-5B-SG5

-The connector performace will be according to NEMA
-Dimensions in mm, for reference only

ATE ADVANCED TECHNOLOGY EQUIPMENT
Tel: 643-0982, 246-2242

DATE	Des.	Ver.	Aprov.	SUBSTITUIÇÃO DE	
					R
01/28/09				General revised	R
11/18/08					SAW-86154-E 17

DRAFT

LEGEND 15.57

136

~~153~~

55

BURNDY	STREAMLINED TERMINAL CONNECTOR **W4A54R-6N-SG**	Fl. de Fls R

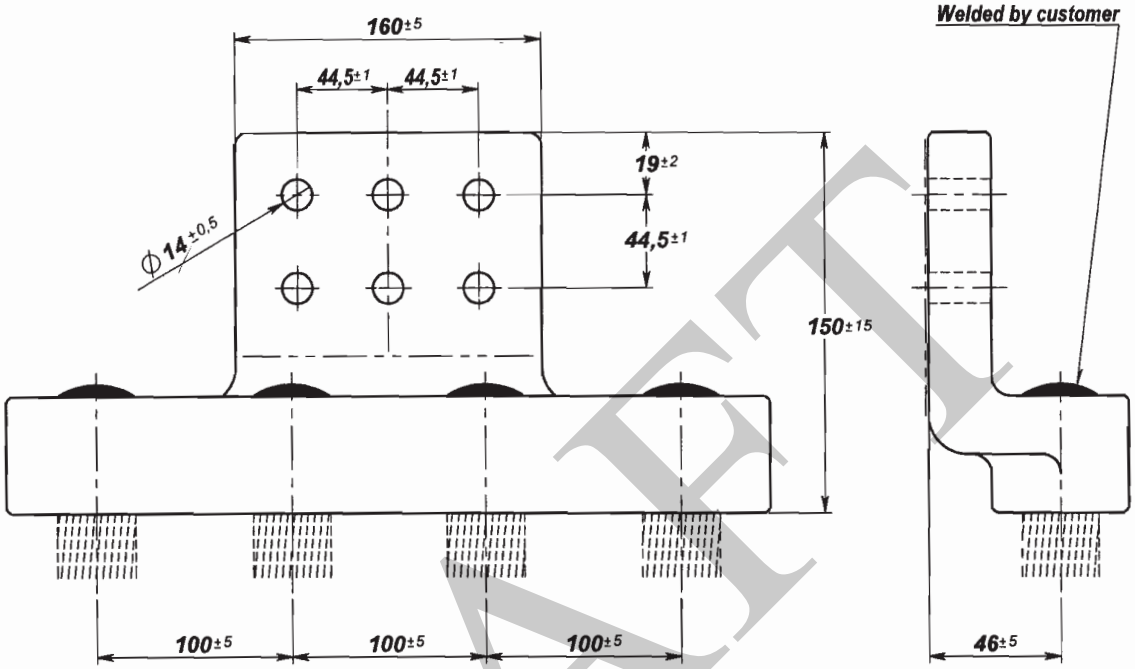

DRAFT

APPLICATION: *FOUR CONNECTORS STREAMLINED FOR ALUMINUM CABLE 1400-1600 MCM-AL OR 1272-1510,5 MCM-ACSR TO PAD WITH 6 NEMA HOLES*

INSTALLATION: *CABLE: WELDED*
BAR: Bolted (See note 1)

MATERIAL: *CAST ALUMINUM ALLOY*

LETTERING: **BURNDY**
W4A54R-6N-SG

LEGEND 28.48

Note: *1-When the letter "H" is added to the catalog number, the connector will be supplied with hardware (M12) for fixing to pad of the equipment. Ex: W4A54R-6N-SG-H (Please specify the bar thickness)*

-PENETROX joint compound recommended on contact sufarces
-The connector performace will be according to NEMA
-Dimensions in mm, for reference only.

					R
					R
Data	Des	Ver.	Aprov.	SUBSTITUIÇÃO DE	**SAW-86632-E**
01/28/10					

BURNDY do BRASIL

WELDMENT TERMINAL
W2A...R-4N

Fl. de Fls. F

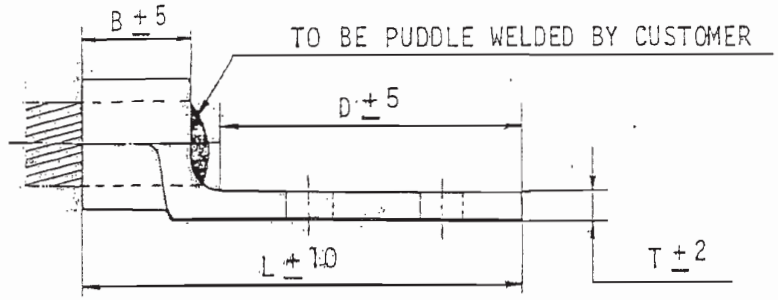

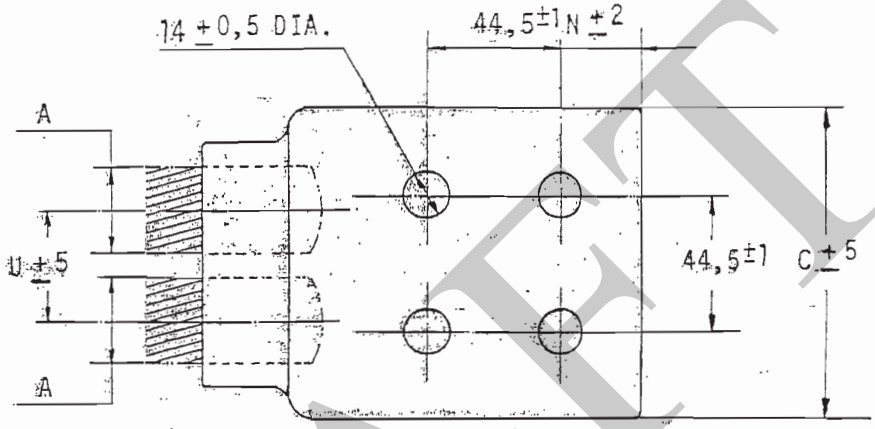

CATALOG NUMBER	ACCOMMODATION	DIMENSIONS						
	A	L	B	D	C	T	N	U
W2A54R-4N	1272 MCM (54/19) ACSR 1431 MCM (54/19) ACSR	145	51	83	102	19	19	50
W2A41R-4N	477 MCM (24/7) ACSR 605 MCM (54/7) ACSR	124	38	76	76	13	16	32,5
W2A36IR-4N	428-500 MCM-AL-ASC 397,5(26/7)-477(18/1)MCM-ACSR	120	32	76	76	13	16	31
W2A44R-4N	700-874,5 MCM-AL-ASC 605 (26/7)-715,5 (30/19)MCM-ACSR	125	38	76	76	13	16	37

LEGEND

28.63

MATERIAL: Cast Aluminum Alloy

LETTERING: (typical) BURNDY W2A54R-4N

ATE ADVANCED TECHNOLOGY EQUIPMENT
Tel: 643-0982, 246-2242

NOTES:

1. When the letters "HSS" are added to the catalog number, the connector will be supplied with elements in stainless steel for mounting to pad of the equipment. EX: W2A54R-4N-HSS

2. When the letter "H" is added to the catalog number, the connector will be supplied with elements for mounting to pad of the equipment. EX: W2A54R-4N-H

Dimensions in mm, for reference only.

57

138

~~155~~

Data	Des.	Ver.	Aprov.	SUBSTITUIÇÃO DE	
10.05.89					SAW - 78702-F

19

DRAFT

BURNDY do BRASIL

WELDMENT TERMINAL
WA...-4N

Fl. de Fls. R

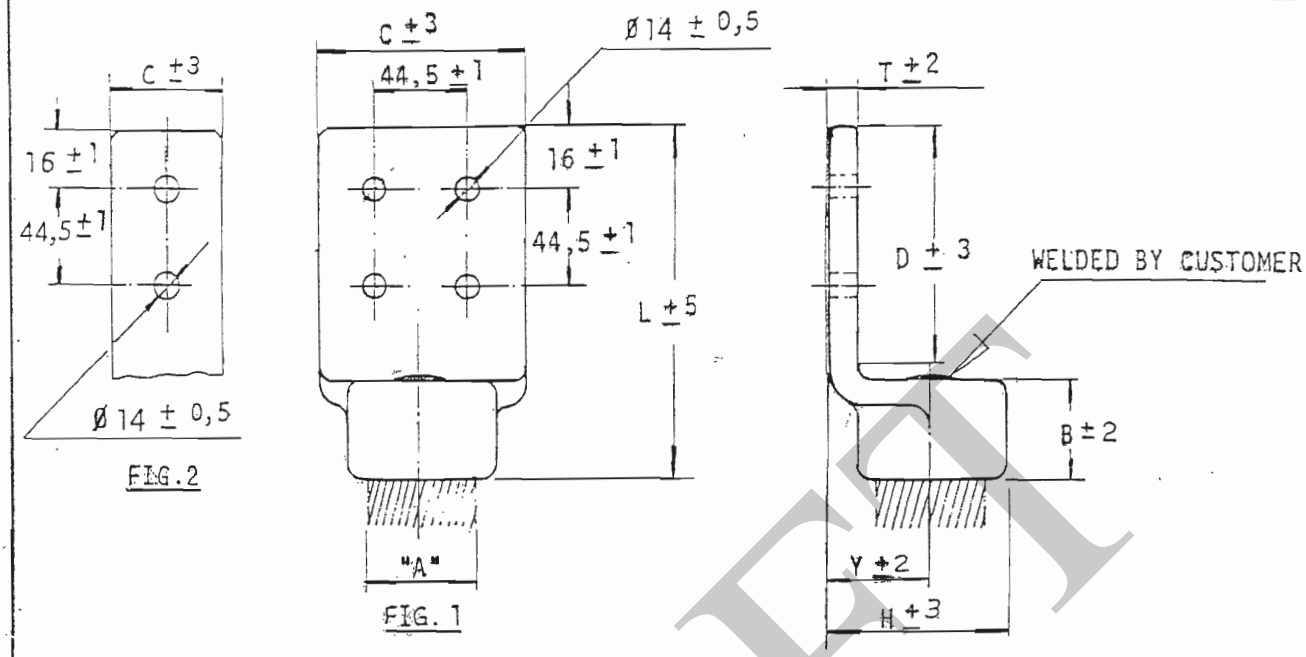

CATALOG NUMBER	ACCOMMODATION "A" (MCM)	FIG	DIMENSIONS B	C	D	H	L	T	Y
WA41R-4N	550-650 AL 477-605(24-7) ACSR	1	38	76	76	50	121	13	30
WA54R-4N	1400-1600 AL 1272-1510,5(45-7) ACSR	1	51			65	138	14	35
WA41R-2N	550-650 AL 477-605(24/7) ACSR	2	38	51	76	50	121	13	30
WA341R-2N	336,4-419,6 AL 211,3(12/7)-397,5(18/1)ACSR	2	32	67	76		115	13	

LEGEND
29.81
29.83

MATERIAL: Cast aluminum alloy

LETTERING: (typical) BURNDY WA41R-4N

ADVANCED TECHNOLOGY EQUIPMENT
Tel : 643-0982, 246-2242

NOTES:
1. When the letters "HSS" are added to the catalog number, the connector will be supplied with elements in stainless steel for mounting to pad of the equipment. EX: WA41R-4N-HSS
2. When the letter "H" is added to the catalog number, the connector will be supplied with elements for mounting to pad of the equipment. EX: WA41R-4N-H

Dimensions in mm, for reference only.

Data	Des.	Ver	Aprov	SUBSTITUIÇÃO DE

DRAFT

BURNDY do BRASIL

TERMINAL CONNECTOR
SWAC...A-4N

Fl. de Fls R

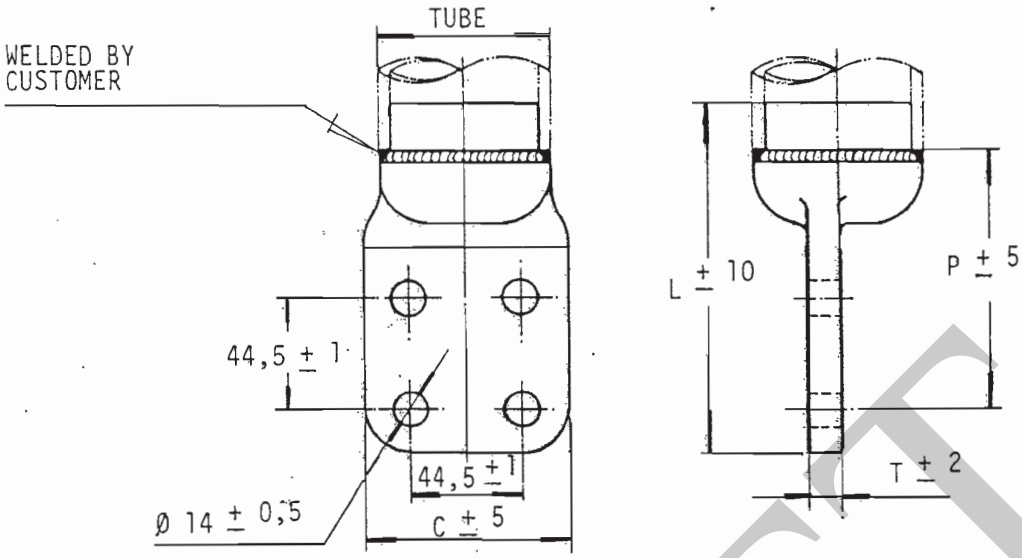

ITEM	CATALOG NUMBER	TUBE	DIMENSIONS C	L	P	T	DESIGNED FOR
01	SWAC18A-34N	2" IPS (SCH.40)	76	148	105	12,7	550kV
02	SWAC24A-44N	5" IPS (SCH.40)	102	215	145	19	550kV
03	SWAC94A-44N	5" IPS (SCH.80)	102	196	129	19	
04	SWAC96A-44N	6" IPS (SCH.80)	102	197	131	25,4	
05	SWAC20A-34N	3" IPS (SCH.40)	76	160	109	16	
06	SWAC22A-44N	4" IPS (SCH.40)	102	188	125	19	
07	SWAC17A-34N	1 1/2" IPS(SCH.40)	76	140	100	11	
08	SWAC15A-34N	1" IPS(SCH.40)	76	128	93	9,6	

LEGEND 30.03 30.07

LETTERING: BURNDY
(typical) SWAC18A-34N

MATERIAL: Cast aluminum alloy

ATE ADVANCED TECHNOLOGY EQUIPMENT
Tel: 643-0982, 246-2242

NOTES:
1. When the letters "HSS" is added to the catalog number, the connector will be supplied with elements in stainless steel for mounting to pad of the equipment. EX: SWAC18A-34N-HSS
2. When the letter "H" is added to catalog number, the connector will be supplied with hardaware for mounting pad of equipment. EX: SWAC18A-34N-H
3. When correctly installed the performance will be according to NEMA

Dimensions in mm, for reference only.

Data	Des	Ver	Aprov		
09.03.90				REVISED	R 1
				SUBSTITUIÇÃO DE	SAS – 77681-E

142 ~~159~~ 23 59

DRAFT

FCi BURNDY PRODUCTS

STREAMLINED WELDMENT TERMINAL
SWAC20A-34N-SG

Fl. de Fls R

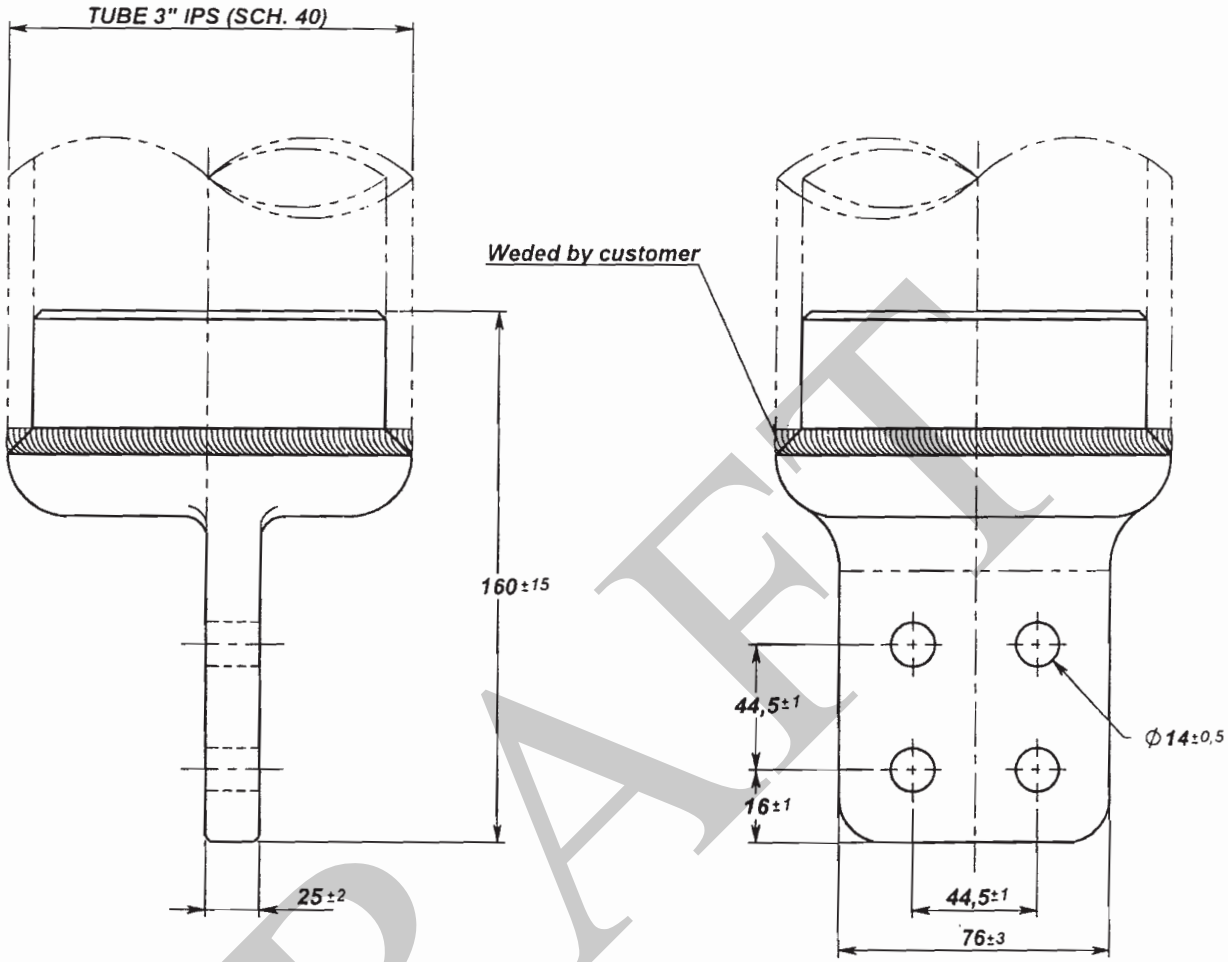

DRAFT

APPLICATION: CONNECTOR FOR ALUMINUM TUBE 3" IPS SCH. 40 TO PAD WITH 4 HOLES NEMA

INSTALLATION: WELDED

MATERIAL: CAST ALUMINUM ALLOY

AMPERE RATING: 1,895 A

LETTERING: **BURNDY**
SWAC20A-34N-SG
3" IPS

NOTE:

1-WHEN THE LETTER "H" IS ADDED TO THE CATALOG NUMBER, THE CONNECTOR WILL BE SUPPLIED WITH ELEMENTS FOR FIXING TO PAD OF THE EQUIPAMENT EX: SWAC20A-34N-SG-H

-Must be filled with "PENETROX" joint compound during installation
-The connector performance will be according to NEMA
-Dimensions in mm, for reference only.

LEGEND 30.05

144
~~161~~

Data	Des.	Ver.	Aprov.	SUBSTITUIÇÃO DE	SAS-85574-E
09/11/07					

SW

25

A FCI	EXPANSION TERMINAL WXA20A–4N–SG4	Fl. DE Fls. R

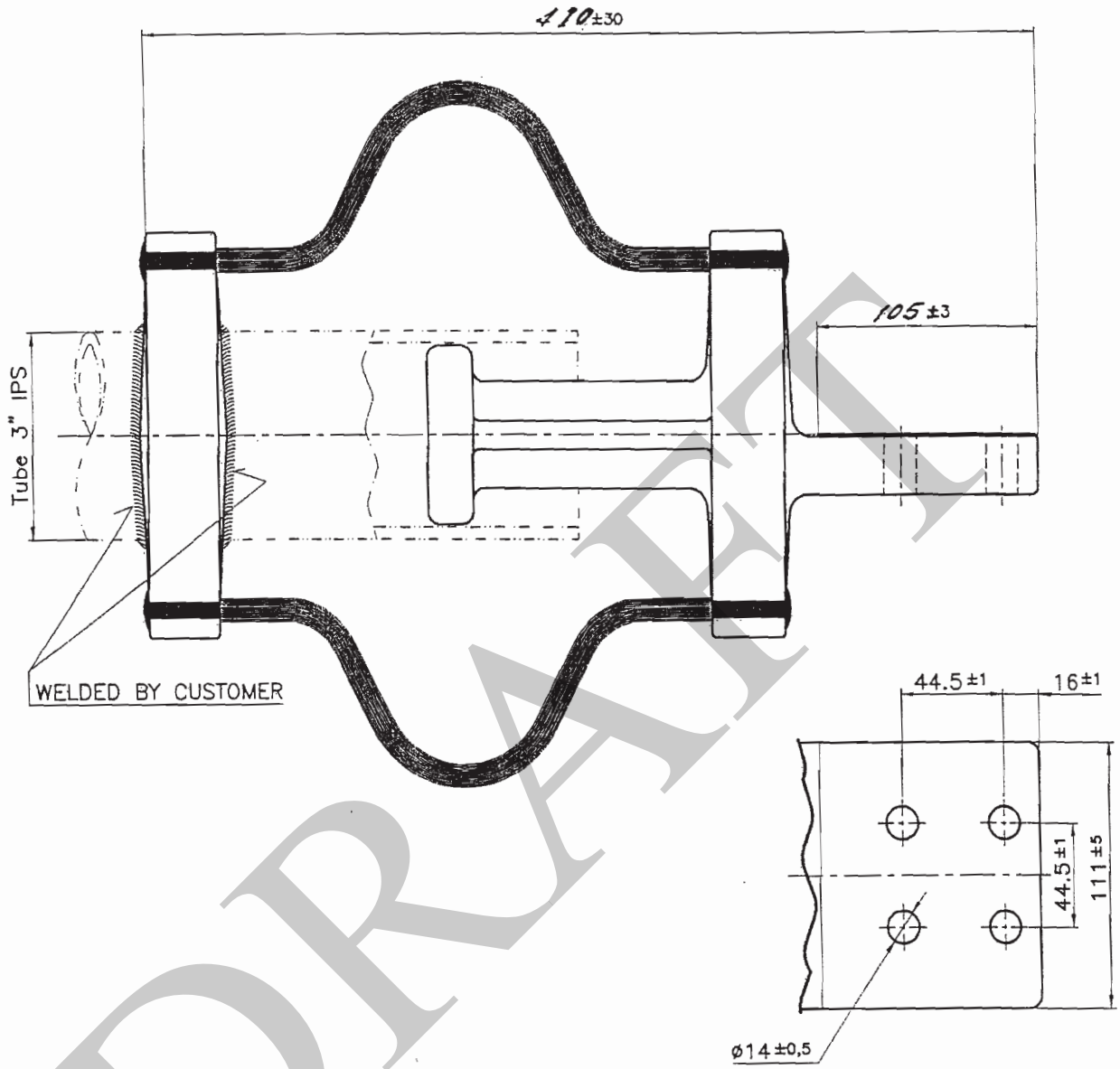

APPLICATION: Expansion terminal for aluminum tube 3" IPS (Sch. 40) to pad with 4 holes Nema.

INSTALLATION: Welded

MATERIAL: Body, Clamp and Taps: Cast aluminum alloy
Flexible Straps: Aluminum

LETTERING: BURNDY
WXA20A–4N–SG4

ADVANCED TECHNOLOGY EQUIPMENT
Tel : 643-0982, 246-2242

NOTA:
1–When the letter "H" is added to the catalog number, the connector will be supplied with elements for fixing to pad of the equipment. Ex: WXA20A–4N–SG4-H

Dimensions in mm, for reference only.

Data	Des.	Ver.	Aprov.	
05/25/04				MODIFIED DIMENSION 90 TO 105
03/25/04				SUBSTITUICAO DE

SAW–83612–5

DRAFT

BURNDY do BRASIL

ANGLE "T" CONNECTOR
SWT...A....A...

Fl. de Fls R

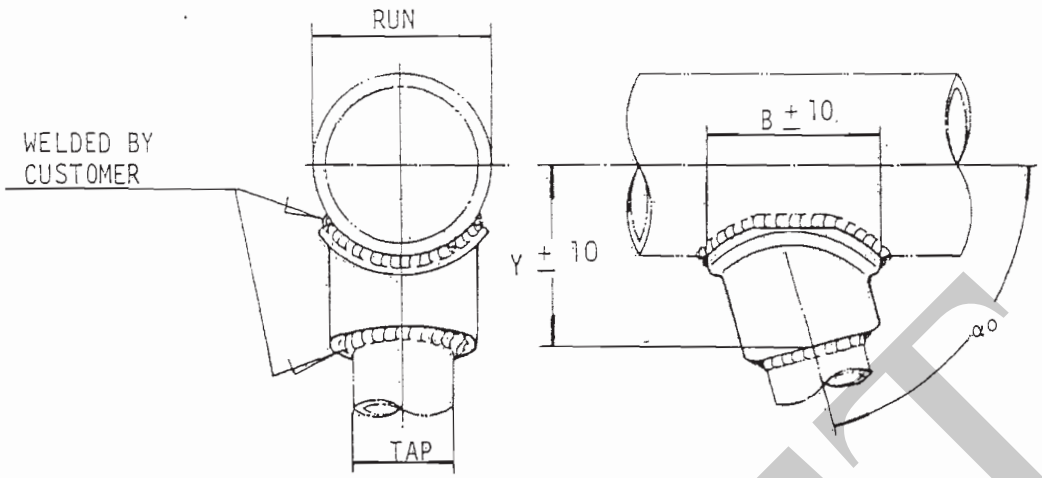

ITEM	CATALOG NUMBER	ACCOMMODATION		DIMENSIONS		
		RUN	TAP	B	Y	αo
1	SWT18A15A-80	2" IPS	1" IPS	60	58	80
2	SWT22A22A-60	4" IPS	4" IPS	130	127	60
3	SWT22A22A-75	4" IPS	4" IPS	155	115	75
4	SWT18A18A-80	2" IPS	2" IPS	100	70	80
5	SWT20A17A-75	3" IPS	1 1/2" IPS	81	80	75
6	SWT86A86A-80	6" IPS	6" IPS	290	160	80
7	SWT20A18A-80	3" IPS	2" IPS	102	82	80
8	SWT20A-80	3" IPS	3" IPS	130	95	80
9	SWT22A20A-80	4" IPS	3" IPS	155	115	80
10	SWT24A20A-80	5" IPS	3" IPS	130	120	80
11	SWT20A18A-70	3" IPS	2" IPS	102	82	70
12	SWT20A20A-70	3" IPS	3" IPS	115	100	70
13	SWT86A22A-75	6" IPS	4" IPS	155	140	75
14	SWT20A20A-80	3" IPS	3" IPS	115	94	80
15	SWT20A17A-80	3" IPS	1 1/2" IPS	80	80	80
16	SWT17A17A-80	1 1/2" IPS	1 1/2" IPS	80	60	80

APPLICATION: For aluminum tube

INSTALLATION: Welded

MATERIAL: Cast aluminum alloy

LETTERING: (typical) BURNDY SWT18A18A-80

ATE ADVANCED TECHNOLOGY EQUIPMENT
Tel : 643-0982, 246-2242

Dimensions in mm, for reference only.

Data	Des	Ver	Aprov	
07.25.91				Revised item 12

SUBSTITUIÇÃO DE

SAS - 77694 F

DRAFT

BURNDY do BRASIL

ANGLE "V" CONNECTOR
SWAT...A....A-...

Fl de Fls. R

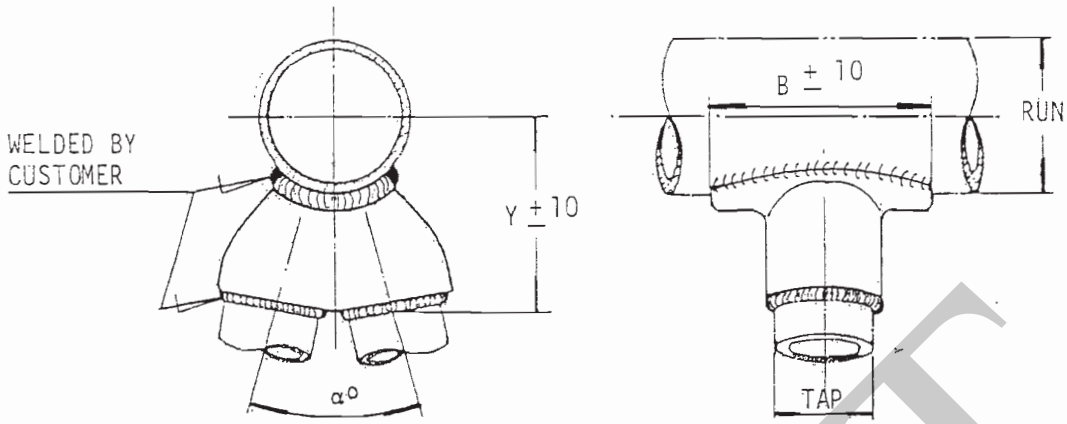

ITEM	CATALOG NUMBER	ACCOMMODATION		DIMENSIONS		
		RUN	TAP	B	Y	αº
1	SWAT18A18A-20	2" IPS	2" IPS	102	86	20
2	SWAT86A19A-30	6" IPS	2 1/2" IPS	111	126	30
3	SWAT17A17A-30	1 1/2" IPS	1 1/2" IPS	89	76	30
4	SWAT20A17A-20	3" IPS	1 1/2" IPS	89	88	20
5	SWAT20A18A-20	3" IPS	2" IPS	102	91	20
6	SWAT24A24A-30	5" IPS	5" IPS	180	140	30
7	SWAT86A20A-20	6" IPS	3" IPS	130	120	20
8	SWAT22A20A-30	4" IPS	3" IPS	130	110	30
9	SWAT20A18A-30	3" IPS	2" IPS	102	89	30
10	SWAT20A20A-30	3" IPS	3" IPS	130	102	30
11	SWAT24A20A-30	5" IPS	3" IPS	220	117	30
12	SWAT20A20A-20	3" IPS	3" IPS	130	110	20
13	SWAT22A22A-30	4" IPS	4" IPS	150	130	30
14	SWAT24A22A-30	5" IPS	4" IPS	145	132	30
15	SWAT24A20A-20	5" IPS	3" IPS	130	121	20
16	SWAT209A209A-30	100 mm Dia.	100 mm Dia.	140	121	30
	SWAT22A20A-20	4" IPS	3" IPS			20

APPLICATION: For aluminum tube

INSTALLATION: Welded

MATERIAL: Cast aluminum alloy

LETTERING: BURNDY
SWAT20A18A-20

ATE ADVANCED TECHNOLOGY EQUIPMENT
Tel: 543-0982, 246-2242

Dimensions in mm, for reference only.

Data	Des	Ver	Aprov	SUBSTITUIÇÃO DE	SAS - 77693-F

DRAFT

FCI

WELDED T-CONNECTOR
SWAB20A-4N

Fl. DE Fls. R

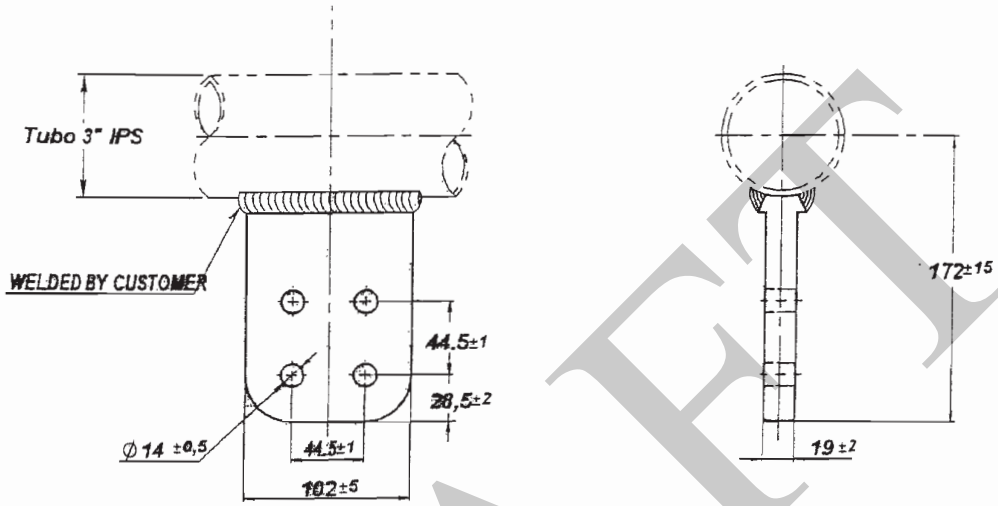

DRAFT

APPLICATION: CONNECTION FOR ALUMINUM TUBE Ø3" IPS TO PAD WITH 4 HOLES NEMA.

INSTALLATION: WELDED

MATERIAL: CAST ALUMINUM ALLOY (ASTM 356)

LETTERING: **BURNDY**
SWAB20A-4N
89mm - 3" IPS - AL

ATE ADVANCED TECHNOLOGY EQUIPMENT
Tel : 643-0882, 246-2242

-Must be filled with "PENETROX" joint compound during installation

-The connector performance will be according to NEMA.

-Dimensions in mm, for reference anloy.

Data	Des.	Ver.	Aprov.	SUBSTITUIÇÃO DE

FCI

WELDMENT BAR TAP
SWAB24A-4N

Fl DE Fls R

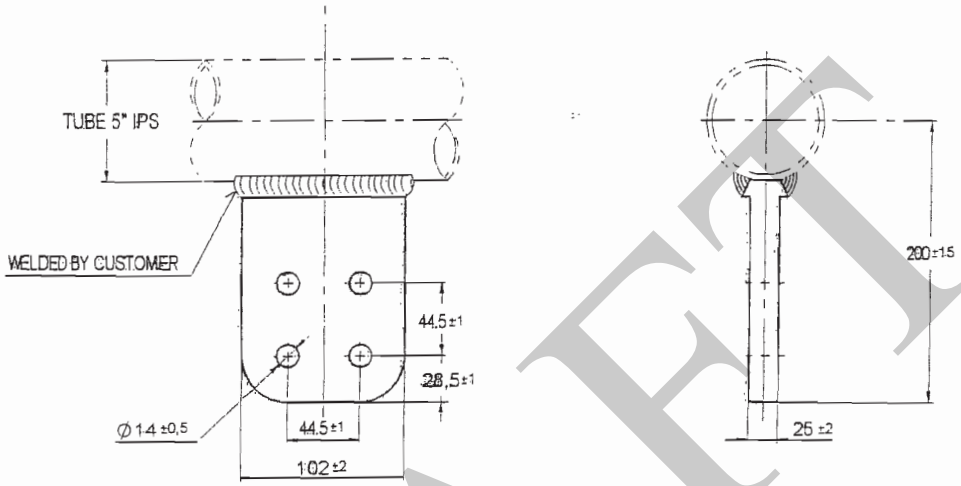

DRAFT

APPLICATION: CONNECTION FOR ALUMINUM TUBE Ø 5" IPS TO PAD WITH 4 HOLES NEMA.

INSTALLATION: WELDED

MATERIAL: CAST ALUMINUM ALLOY

LETTERING: **BURNDY**
SWAB24A-4N
5" IPS

ADVANCED TECHNOLOGY EQUIPMENT

THE CONNECTOR PERFORMANCE WILL BE ACCORDING TO NEMA

DIMENSIONS IN mm, FOR REFERENCE ONLY

LEGEND 4.2.06

Data	Des.	Ver	Aprov	SUBSTITUIÇÃO DE

158

175

39

65

BURNDY do BRASIL

COUPLER CONNECTOR
WS....A-F

Fl. 44 Fls. R

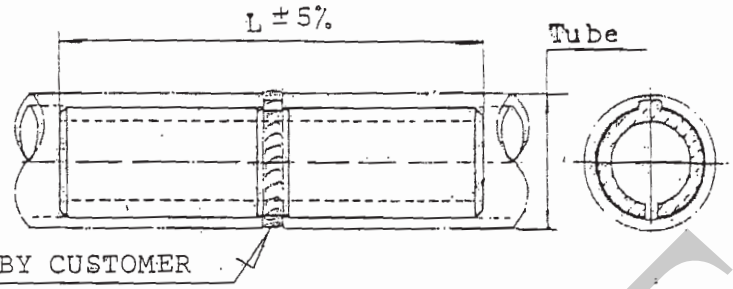

ITEM	CATALOG NUMBER		TUBE		LETTERING BURNDYBRAS		L
	SCH 40	SCH 80	IPS	EHPS			
1	WS14A-F	WS54A-F	3/4"		WS14A-F	WS54A-F	114
2	WS15A-F	WS55A-F	1"		WS15A-F	WS55A-F	153
3	WS16A-F	WS56A-F	1 1/4"		WS16A-F	WS56A-F	191
4	WS17A-F	WS57A-F	1 1/2"		WS17A-F	WS57A-F	228
5	WS18A-F	WS58A-F	2"		WS18A-F	WS58A-F	305
6	WS19A-F	WS59A-F	2 1/2"		WS19A-F	WS59A-F	381
7	WS20A-F	WS90A-F	3"		WS20A-F	WS90A-F	457
8	WS21A-F	WS91A-F	3 1/2"		WS21A-F	WS91A-F	457
9	WS22A-F	WS92A-F	4"		WS22A-F	WS92A-F	457
10	WS24A-F	WS94A-F	5"		WS24A-F	WS94A-F	457
11	WS86A-F	WS96A-F	6"		WS86A-F	WS96A-F	457

44.08

LEGEND 44.04

44.06

44.07

INSTALLATION: Welded

MATERIAL : Cast aluminum alloy.

ATE ADVANCED TECHNOLOGY EQUIPMENT
Tel : 643-0982, 246-2242

Dimensions in mm for reference only.

DRAFT

159 ~~176~~ 10.18.90 Revised

BURNDY doBRASIL	CORONA BELL LB...A	ITEM -
		Fl de Fls R

9831

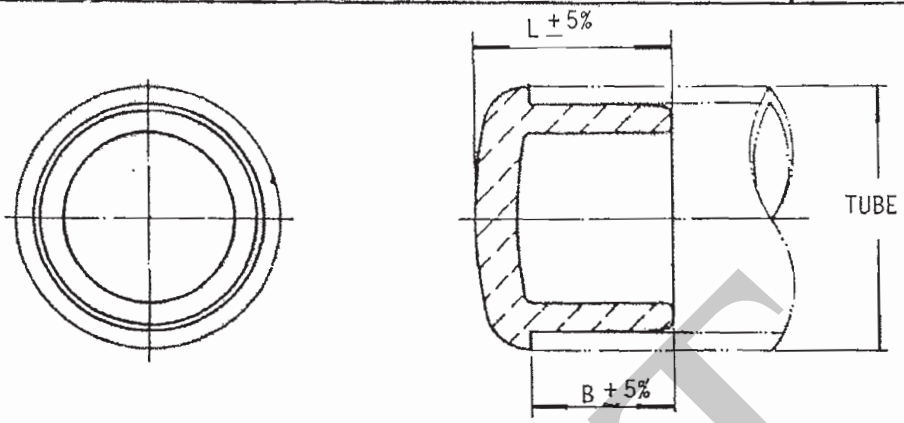

ITEM	CATALOG NUMBER	DIMENSIONS TUBE(IPS) STANDARD	L (mm)	B (mm)	ITEM	CATALOG NUMBER	DIMENSIONS TUBE(IPS) EXTRA HEAVY	L (mm)	B (mm)
1	LB13A	1/2"	17	10	1A	LB53A	1/2"	17	10
2	LB14A	3/4"	17	10	2A	LB54A	3/4"	17	10
3	LB15A	1"	20	10	3A	LB55A	1"	20	10
4	LB16A	1 1/4"	23	12	4A	LB56A	1 1/4"	23	12
5	LB17A	1 1/2"	25	12	5A	LB57A	1 1/2"	25	12
6	LB18A	2"	27	15	6A	LB58A	2"	27	15
7	LB19A	2 1/2"	35	20	7A	LB59A	2 1/2"	35	20
8	LB20A	3"	45	25	8A	LB90A	3"	45	25
9	LB21A	3 1/2"	53	30	9A	LB91A	3 1/2"	53	30
10	LB22A	4"	57	35	10A	LB92A	4"	57	35
11	LB23A	4 1/2"	62	40	11A	LB93A	4 1/2"	62	40
12	LB24A	5"	68	46	12A	LB94A	5"	68	46
13	LB86A	6"	75	54	13A	LB96A	6"	75	54
14	LB88A	8"	85	54	14A	LB98A	8"	85	54
15	LB248A-SG	150 mm	75	50	15A	LB195A-SG1	Ø 80x70 mm	45	28

45.54

45.56

45.58

45.59

APPLICATION: Corona bell for aluminum tube

INSTALLATION: Pressure fitting

MATERIAL: Cast aluminum alloy

LETTERING: (typical) BURNDY LB13A

ATE ADVANCED TECHNOLOGY EQUIPMENT

Dimensions in mm, for reference only.

Data	Des	Ver	Aprov	SUBSTITUIÇÃO DE	SAL - 72174-E
05.16.88	C.D				

DRAFT

BURNDY do BRASIL	RIGID SPACER S2GBP...A-...	Fl. de Fls. R

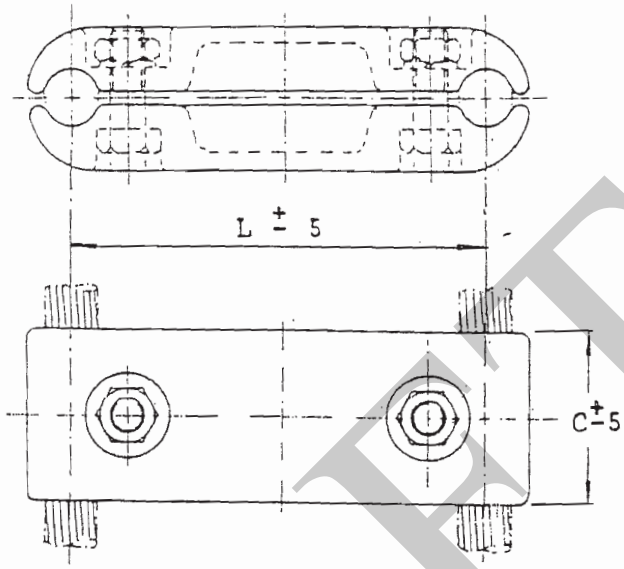

ITEM	CATALOG NUMBER	ACCOMMODATION		DIMENSIONS			BOLTS
		AL	ACSR	C	L		
1	S2GBP41A-20	795-874,5MCM	795 MCM 45/7	76	200		M16
2	S2GBP46A-10	1500-1590MCM	1272 - 1431	76	100		M12
3	S2GBP48A-12	1750-2000MCM	1590 - 1780	76	120		M16
4	S2GBP495A-20	3500 MCM	-	76	200		M16
5	S2GBP36A-10	556,5-600 MCM	477 MCM(26/7)(30/7)	76	100		M12

APPLICATION: Rigid spacer for AL or ACSR conductors.

INSTALLATION : Bolted

TIGHTENING TORQUE : 7,6 mKgf (steel bolts) - M16 / 4,7 m.kgf. (steel bolts) - M12

MATERIAL : Body and caps : Cast aluminum alloy
Bolts, Nuts and Washers : Steel hot dip zinc coated (ASTM A153)

LETTERING : BURNDY
TYPICAL S2GBP495-20

ATE ADVANCED TECHNOLOGY EQUIPMENT
Tel: 643-0982, 240 2242

When corretly installed, performance will be according to NEMA publ.

Dimensions in mm, for reference only.

Data	Des	Ver.	Aprov	SUBSTITUIÇÃO DE

DRAFT

BURNDY

RIGID SPACER CONNECTOR
S2GBP46A-20

Fl. de Fls. R

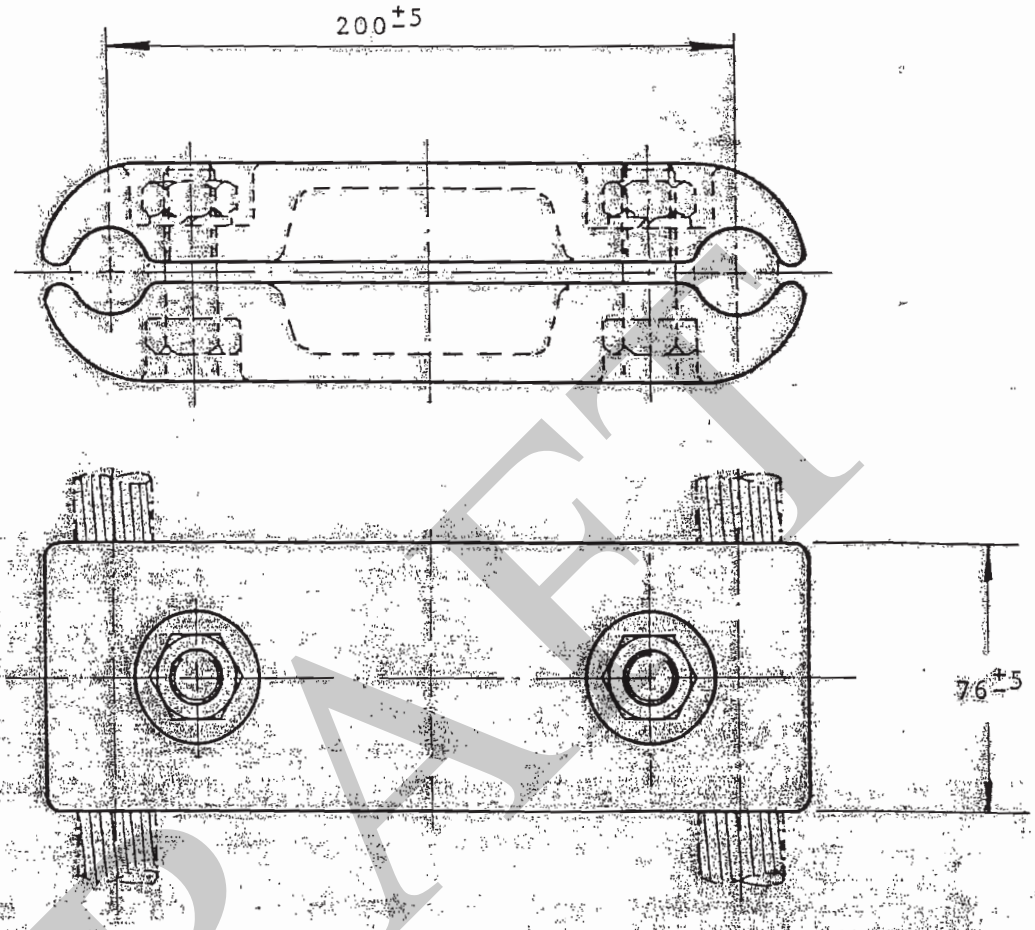

APPLICATION: For ASC 1590-1600 MCM or ACSR 1272(54/19)-1431(54/19) MCM conductors

INSTALLATION: Bolted

TIGHTENING TORQUE: 7,6 mkgf. (Steel) - 5,5 mkgf (Stainless Steel)

MATERIAL: Body and Cap: Cast aluminum alloy
Bolts, Nuts and Washers: Steel hot dip zinc coated (ABNT MB25) (ASTM A153)

LETTERING: BURNDY
S2GBP46A-20

ATE ADVANCED TECHNOLOGY EQUIPMENT
Tel.: 649-0982, 246-2242

When correctly installed, connector performance will be according to NEMA

When the letters "SS" are added to the catalog number, the connector will be supplied with bolts, nuts and washers in stainless steel. EX: S2GBP46A-20-SS

Dimensions in mm, for reference only

Data	Des.	Ver.	Aprov.	SUBSTITUIÇÃO DE	R
					R

DRAFT

FCI

SPACER CONNECTOR
N4P46A–SG

Fl. DE Fls. R

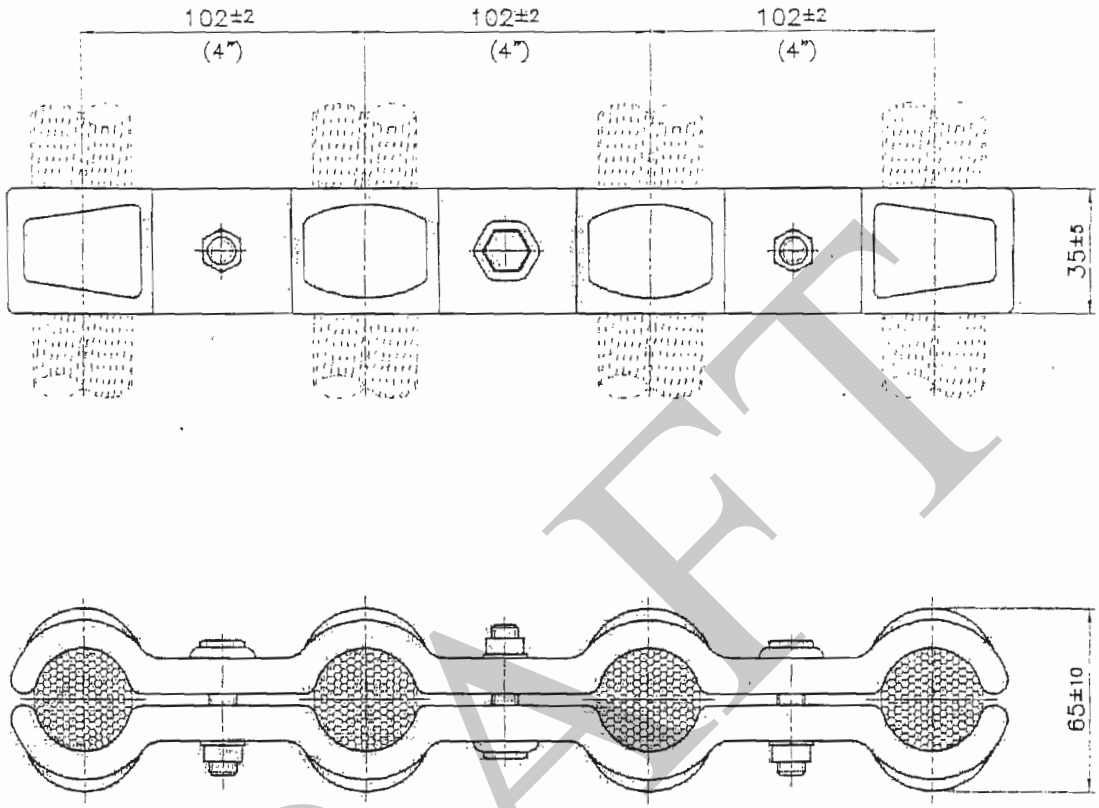

DRAFT

APPLICATION: FOR CONNECTION OF 4 ALUMINUM CABLES 1272 MCM – ACSR

INSTALLATION: BOLTED

TIGHTENING TORQUE: 4,7 m.kgf (M12)

MATERIAL: BODY AND CAP: CAST ALUMINUM ALLOY (ASTM B26)
BOLTS, NUTS AND WASHERS: STEEL HOT DIP COATED (ASTM A153)

LETTERING: BURNDY
N4P46A–SG
1272 MCM – ACSR

ATE ADVANCED TECHNOLOGY EQUIPMENT
Tel: 643-0982, 246-2242

Dimensions in mm, for reference only.

Data	Des.	Ver.	Aprov.	SUBSTITUICAO DE	SAN–R3591–F
03/12/04					

90.51, 90.52, 90.54

STAINLESS STEEL HARDWARE

Stainless steel bolts, nuts, flatwashers and split lockwashers are manufactured from 18-8 non-magnetic material. Bolts up to 2 inches long are fully threaded; longer bolts are threaded for 2 inches. Nut surfaces and bolt heads have American National Coarse Series, Class #2 fit.

BOLTS

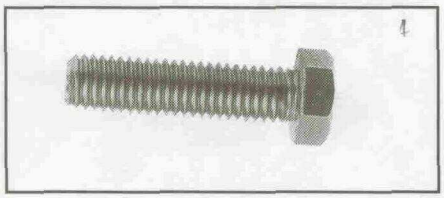

CATALOG NUMBER	THREAD SIZE	LENGTH B (IN.)
38x125 HSSB	3/8 - 16	1.25
38x225 HSSB	3/8 - 16	2.25
38x250 HSSB	3/8 - 16	2.50
38x275 HSSB	3/8 - 16	2.75
50x200 HSSB	1/2 -13	2.00
50x250 HSSB	1/2 -13	2.50
50x300 HSSB	1/2 -13	3.00
62x300 HSSB	5/8 - 11	3.00

NUTS

CATALOG NUMBER	THREAD SIZE
25 HSSN	1/4 - 20
38 HSSN	3/8 - 16
50 HSSN	1/2 - 13
62 HSSN	5/8 - 11

90.61

SPLIT LOCKWASHERS

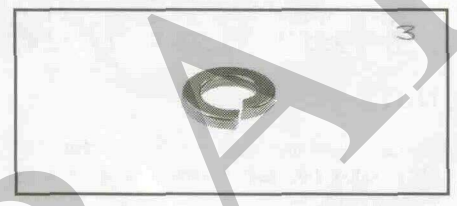

CATALOG NUMBER	FOR BOLT SIZE
25 SWSS LT	1/4
38 SWSSMD	3/8
50 SWSSMD	1/2
62 SWSSMD	5/8

90.66

FLATWASHER

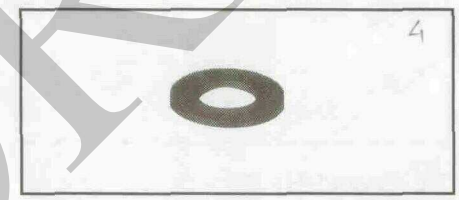

CATALOG NUMBER	BOLT SIZE	NOMINAL DIMENSIONS (INCHES)	
		I.D. A	O.D. B
25 FWSS	1/4	0.266	0.688
38 FWSS	3/8	0.406	1.000
50 FWSS	1/2	0.594	1.125
62 FWSS	5/8	0.656	1.312
75 FLATWASHER (VC)	3/4	0.812	2.000

BELLEVILLE WASHERS

Any bolted "pad to flat" electrical connection should include a bolt, two flatwashers, and the nut. In addition, if any of the flat components is aluminum, a properly designed Belleville washer should be interposed between one of the flatwashers and either the bolt head or the nut, with the hollow of the Belleville washer placed against the flat washer. BURNDY Belleville washers are designed to maintain substantial force when tightened to NEMA - recommended values and finely finished to avoid galling.

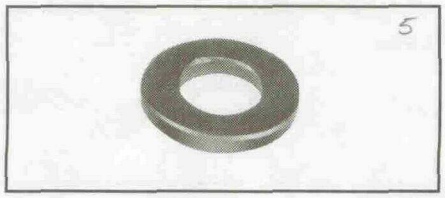

90.76

CATALOG NUMBER	MATERIAL	BOLT SIZE	NOMINAL DIMENSIONS		
			THICKNESS	I.D.	O.D.
38 x 75 BWSS	STAINLESS	3/8	.062	.388	.750
50 X 106 BWSS		1/2	.095	.530	1.06

The stainless washers are 301 stainless steel.

DRAFT

PENETROX A, A-13 AND E

TECHNICAL INFORMATION

PENETROX A
PENETROX A consists of a natural (petroleum) base vehicle in which zinc particles are suspended. For aluminum to aluminum, aluminum to copper applications and aluminum conduit threads. It is not recommended for use with rubber and polyethylene insulated conductors. UL listed

PENETROX A-13
PENETROX A-13 consists of a non-petroleum base vehicle in which zinc particles are suspended. Recommended for aluminum to aluminum, aluminum to copper applications and aluminum conduit threads. Compatible with insulating materials such as rubber, or polyethylene. UL listed and recommended for all voltages.

PENETROX E
PENETROX E consists of a non-petroleum base vehicle in which copper granules are suspended. Recommended for copper to copper applications, grounding and for use on copper conduit threads. UL listed.

Easy to apply:
1. Scratch brush the conductor surfaces until bright and clean.
2. Immediately apply PENETROX® to the conductive surfaces.
3. For EHV applications, remove all excess PENETROX™ after installation is complete.

SHELF LIFE
When stored in its original container in cool (under 100° F) dry environment, PENETROX® oxide inhibiting compound will remain workable and functional for (5) years from the date marked on the container provided it is mixed per instructions prior to use.

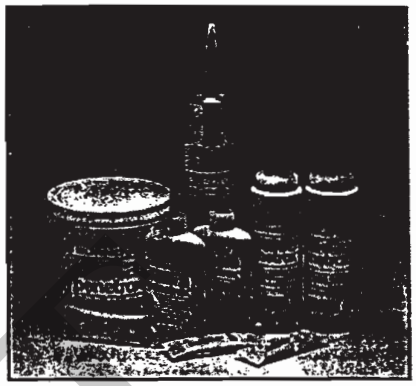

PROPERTIES OF PENETROX®

PROPERTY	VALUE PENETROX® DEFINITION	PENETROX® E & A13	A
PENETRATION (UNWORKED)	The value in accordance to ASTM D217 indicates the consistency of a grease. The higher the number, the softer the grease.	250	230
DROPPING POINT (MIN)	The temperature at which the grease passes from the semi-solid to a liquid state under test conditions.	500° F	230° F
POUR POINT (MAX.)	The lowest temperature at which the compound will flow. Pour point is the lubricant's ability to perform in cold conditions.	–10° F	–15° F

* MSDS sheets available through customer service.

ORDERING INFORMATION

CATALOG NUMBER PENETROX® A	PENETROX® A-13	CONTAINER PENETROX® E	CONTAINER TYPE	SIZE
PEN 1/2-03	PEN A13-3	–	TUBE	3 oz.
PEN A-4	PEN A13-4	PEN E-4	SQUEEZE BOTTLE	4 oz.
P8A	PEN A13-8	PEN E-8	SQUEEZE BOTTLE	8 oz.
PEN A-1LB	PENA13-1LB	–	CARTRIDGE	1 lb.*
PEN A-QT	PEN A13-QT	PEN E-QT	PLASTIC TUB	1 QUART
PEN A-GAL	PEN A13-GAL	PEN E-GAL	CAN	1 GALLON
PEN A-5GAL	PEN A13-5GAL	PEN E-5GAL	PAIL	5 GALLONS
PEN A-55GAL	PEN A13-55GAL	PEN E-55GAL	DRUM	55 GALLONS

* lb. cartridge will fit standard caulking guns.

DRAFT

BURNDY do BRASIL

DOUBLE BUS SUPPORT
U2HKR...A-..

Fl. de Fls. R

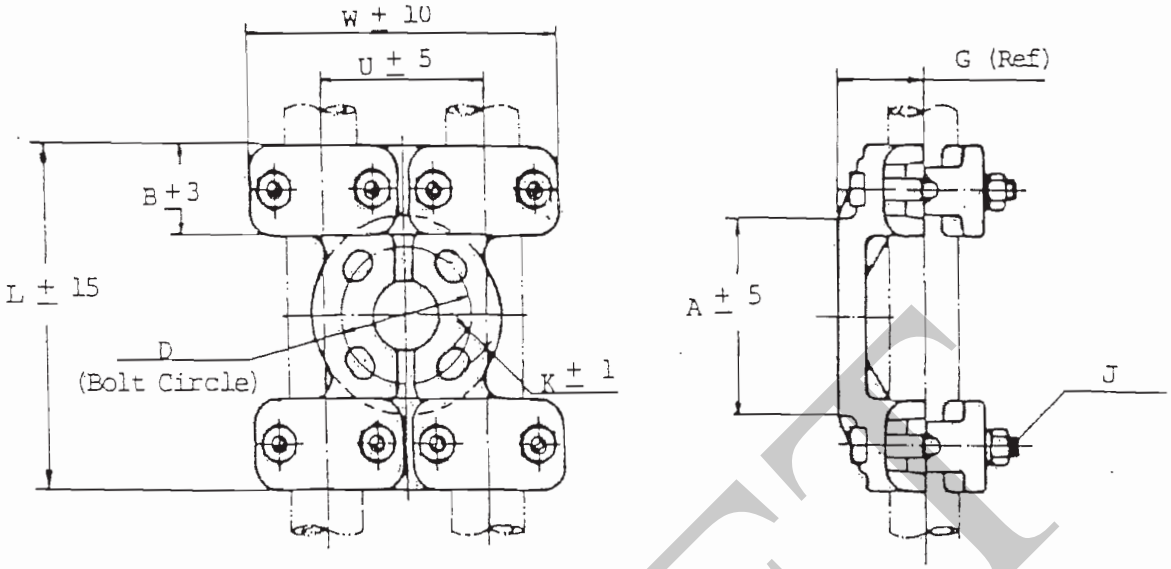

CATALOG NUMBER	ACCOMMODATION			DIMENSIONS								
	CABLE ASC	CABLE ACSR	TUBE IPS	A	B	D	G	J	K	L	U	W
U2HKR11A-3	4 SOL	6-4/0 (6/1)	1/4"	129	51	76,2	30	M12	14			
U2HKR11A-5	4/0 AWG			174	51	127	30	M12	18			
U2HKR13A-3	250	266,8(6/7)	3/8"	129	51	76,2	33	M12	14	200	85	160
U2HKR13A-5	550 MCM	477 (30/7)	1/2"	174	51	127	33	M12	18			
U2HKR14A-3	600	556,5 (26/7)	3/4"	129	51	76,2	44	M12	14	200	90	170
U2HKR14A-5	1113MCM	1033,5(54/7)		174	51	127	44	M12	18			
U2HKR16A-3	1200	1113 (54/19)	1"	129	51	76,2	49	M12	14	200	95	180
U2HKR16A-5	2000MCM	1780 (84/19)	1.1/4"	174	51	127	49	M12	18	245	95	180
U2HKR14A-5-20	600 1113 MCM	556,5 (26/7) 1033,5 (54/7)	3/4"	174	51	127	44	M12	18		200	280

LEGEND

13.73
13.68

APPLICATION: Double bus support for mounting a wide range of cable or tube on post or pedestal type insulators

INSTALLATION: Bolted

MATERIAL: Body and caps: Cast aluminum alloy
Bolts and nuts: Aluminum alloy
Lockwashers: Steel hot dip zinc coated (ASTM A153)

LETTERING: (typical) BURNDY
U2HKR14A-3

ATE ADVANCED TECHNOLOGY EQUIPMENT
Tel: 643-0862, 246-2242

NOTE: When the letter "B" is added to the catalog number, the connector will be supplied with hardware for mounting to base of insulator.
EX: U2HKR14A-3B

Dimensions in mm, for reference only

DRAFT

Data	Des	Ver.	Aprov	SUBSTITUIÇÃO DE	SAU -71927-E
10-18-93					

BURNDY do BRASIL

QUADRUPLE BUS SUPPORT
U4HKR...A...-SG...

ITEM 6-6

Fl. de Fls R

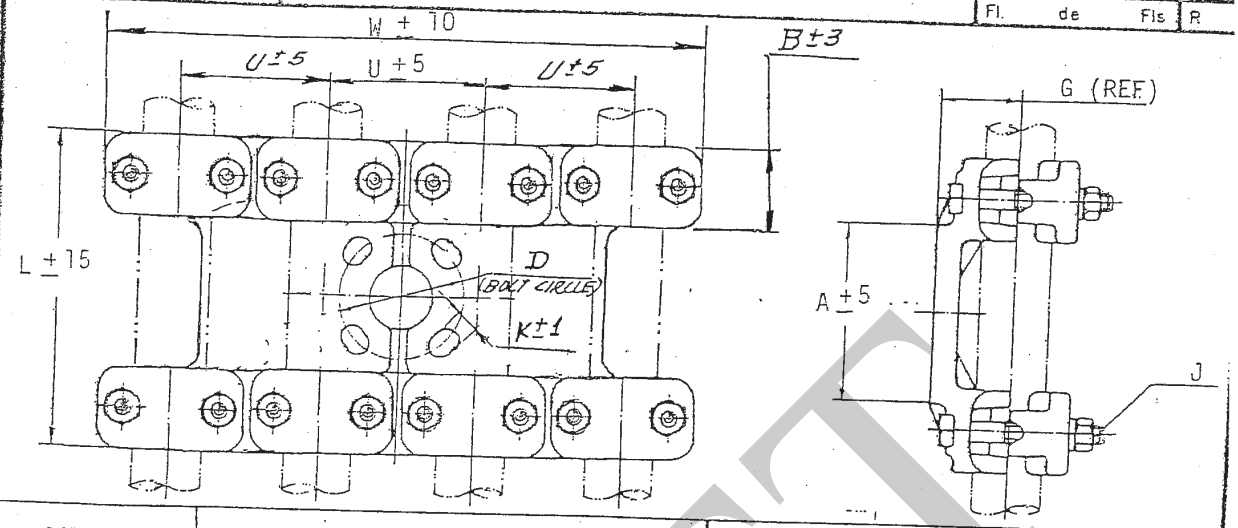

CATALOG NUMBER	ACCOMMODATION		DIMENSIONS								
	CABLE - ASC	CABLE - ACSR	A	B	D	G	J	K	L	U	W
U4HKR16A-3-SG	1200-2000 MCM	1113 (54/9)	175	51	(3") 76.2	50	M12	14	245	95	365
U4HKR16A-5-SG		1780 (84/19)	175	51	(5") 127	50	M12	18	245	95	365

6-6 ⇒ 1998

APPLICATION: QUADRUPLE bus support for mounting a wide range of cable or tube on post or pedestal type insulators

INSTALLATION: Bolted

TIGHTENING TORQUE: 4,7 mkgf (Steel M12) - 3.5 m.kgf (Stainless steel M12 or AL alloy 1/2")
7.6 m.kgf (steel M16) - 5.5 m.kgf (Stainless steel M16 or AL alloy 5/8")

MATERIAL: Body and caps: Cast aluminum alloy
Bolts, nuts and washers: Steel hot dip zinc coated (ASTM A153) or aluminum alloy.

LETTERING: (typical) BURNDY
U4HKR16A-5-SG

NOTE: When the letter "B" is added to the catalog number, the connector will be supplied with hardware for mounting to base of insulator.
EX: U4HKR16A-5B-SG

When the letters "SS" are added to the catalog number the connector will be supplied with bolts, nuts and washers in stainless steel EX: U4HKR16A-5-SG-SS

Dimensions in mm, for reference only.

ATE ADVANCED TECHNOLOGY EQUIPMENT
Tel: 843-0382-246-2242

DRAFT

Data	Des	Ver	Aprov	SUBSTITUIÇÃO DE	SAU-83625-F
04/19/04					

R
R

BURNDY	BUS SUPPORT CONNECTOR UHG20A-3	Fl. de Fls. R

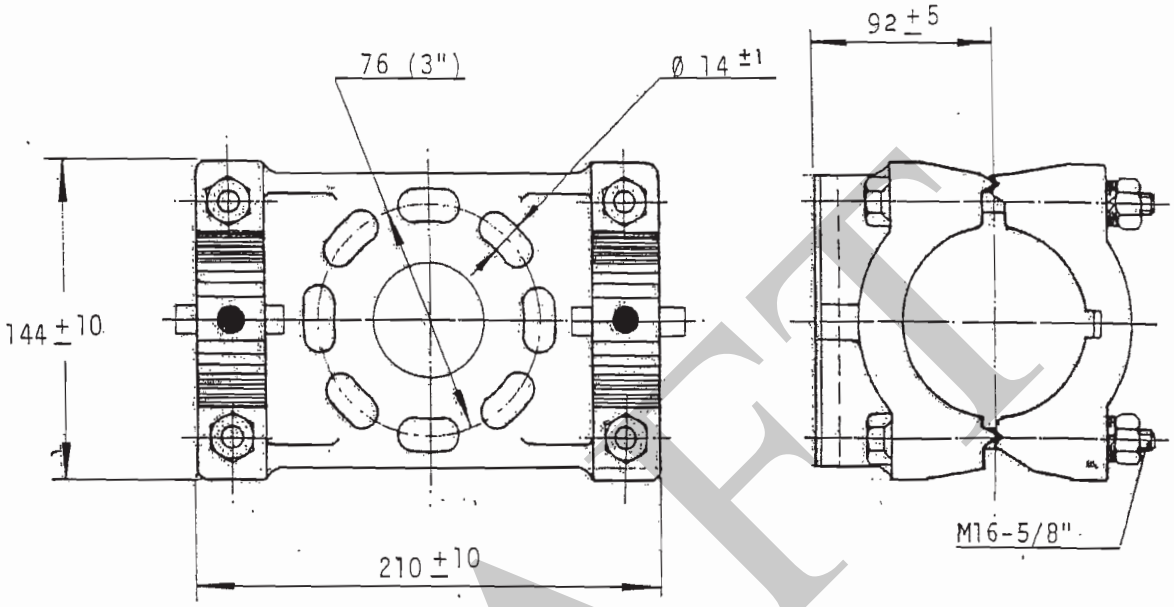

APPLICATION: Bus support connector for aluminum Tube 3" IPS

INSTALLATION: Bolted

TIGHTENING TORQUE: 5,5 mkgf (5/8")- M16

MATERIAL: Body and caps: Cast aluminum alloy
Bolts, nuts and lockwashers: Aluminum alloy

LETTERING: BURNDY
UHG20A-3
89 mm - 3" IPS

WEIGHT: 3,30 kg ± 10%

NOTES:
1. When the letter "B" is added to the catalog number, the connector will be supplied with hardware in hot dip zinc coated for mounting to base of insulator. EX: UHG20A-3B
2. When required by the customer, bolts and nuts will be supplied in aluminum.

ATE ADVANCED TECHNOLOGY EQUIPMENT
Tel : 643-0882, 246-2242

Dimensions in mm, for reference only.

06.25.92				Material revised
07.25.91				REVISED

DRAFT

LEGEND 15,25

130
147

75

11

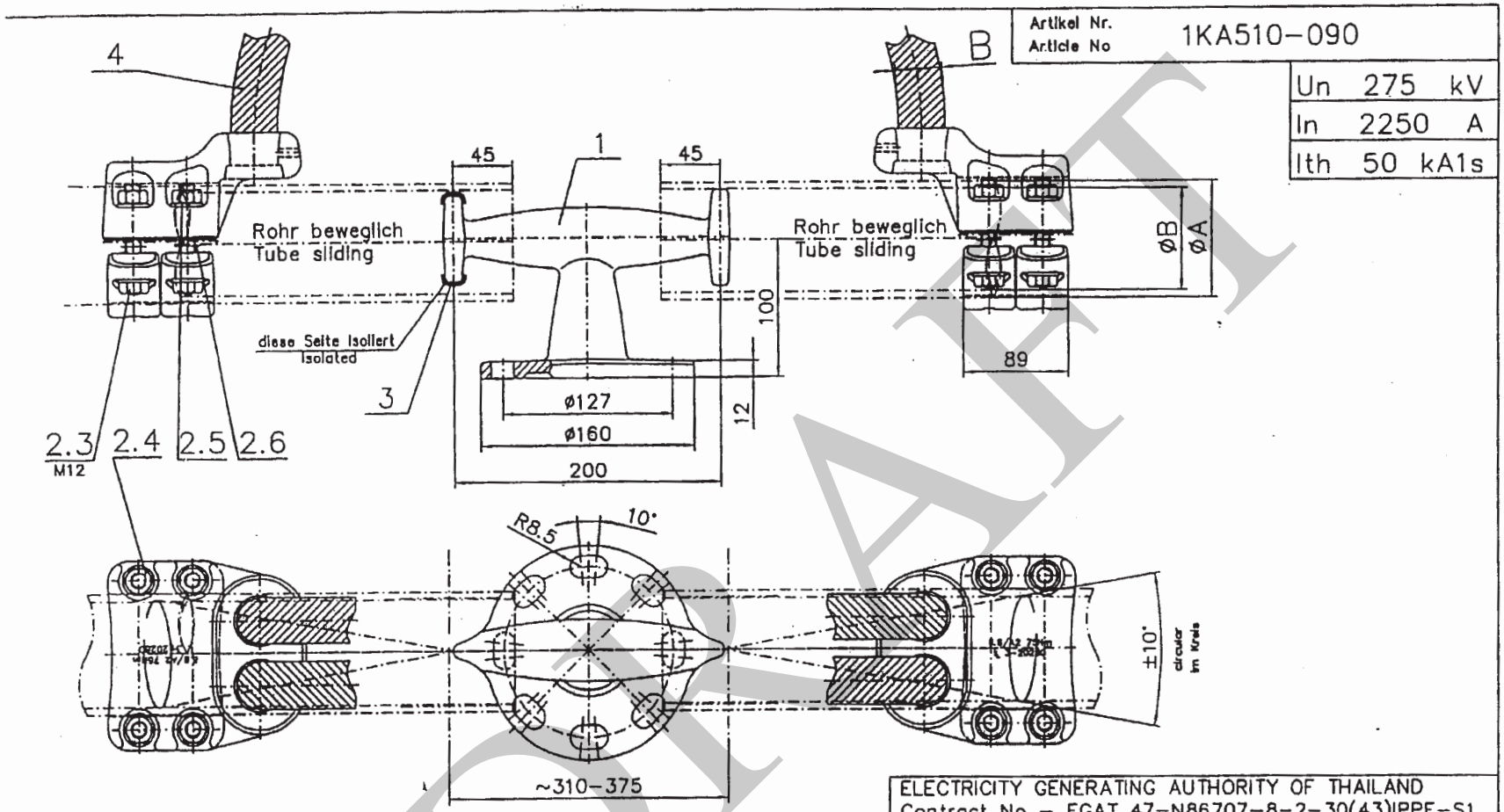

Artikel Nr. / Article No	1KA510-090
Un	275 kV
In	2250 A
Ith	50 kA1s

ELECTRICITY GENERATING AUTHORITY OF THAILAND
Contract No – EGAT 47-N86707-8-2-30(43)IPPE-S1

Item – M	Terminal Number – 15.55
Benennung	Al-Exp.-Stoß-Leitungsträger
Description	Al-Exp.-Bus Support
Artikel Nr / Article No.	1KA510-090
Änderungen / Changes	

Änd.	Was geändert	Gez. Datum					
			A= ø90	gez.:	13-12-01	M.Janßen	
			B= ø73.66	gepr.	13-12-01	M.Janßen	
			C= ø34,4	M=1:4			
			D=			vorh.	

LORÜNSER LEICHTMETALL

15.35

3/46

(นางวิมลวรรณ ศรีวิชาบายนินทร์)

DRAFT

BURNDY do BRASIL

COUPLER CONNECTOR
WS....A-F

Fl. 44 Fls. R

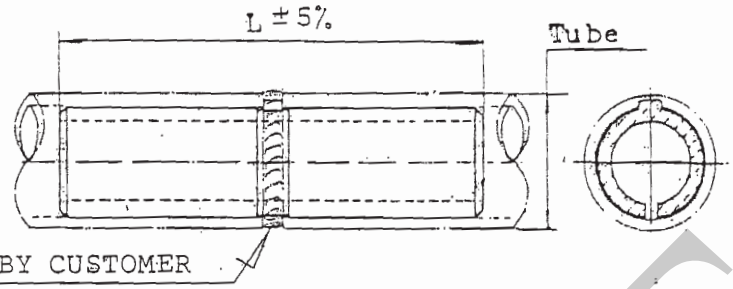

ITEM	CATALOG NUMBER		TUBE		LETTERING BURNDYBRAS		L
	SCH 40	SCH 80	IPS	EHPS			
1	WS14A-F	WS54A-F	3/4"		WS14A-F	WS54A-F	114
2	WS15A-F	WS55A-F	1"		WS15A-F	WS55A-F	153
3	WS16A-F	WS56A-F	1 1/4"		WS16A-F	WS56A-F	191
4	WS17A-F	WS57A-F	1 1/2"		WS17A-F	WS57A-F	228
5	WS18A-F	WS58A-F	2"		WS18A-F	WS58A-F	305
6	WS19A-F	WS59A-F	2 1/2"		WS19A-F	WS59A-F	381
7	WS20A-F	WS90A-F	3"		WS20A-F	WS90A-F	457
8	WS21A-F	WS91A-F	3 1/2"		WS21A-F	WS91A-F	457
9	WS22A-F	WS92A-F	4"		WS22A-F	WS92A-F	457
10	WS24A-F	WS94A-F	5"		WS24A-F	WS94A-F	457
11	WS86A-F	WS96A-F	6"		WS86A-F	WS96A-F	457

44.08

LEGEND 44.04

44.06

44.07

INSTALLATION: Welded

MATERIAL : Cast aluminum alloy.

ATE ADVANCED TECHNOLOGY EQUIPMENT
Tel : 643-0982, 246-2242

Dimensions in mm for reference only.

DRAFT

159

~~176~~ 10.18.90 Revised

77

Un	420	kV
In	2600	A
Ith	50	kA1s

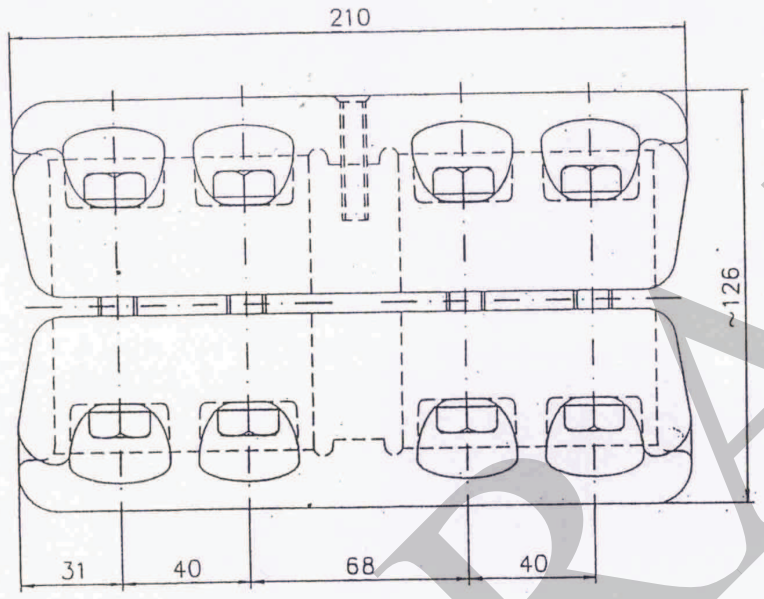

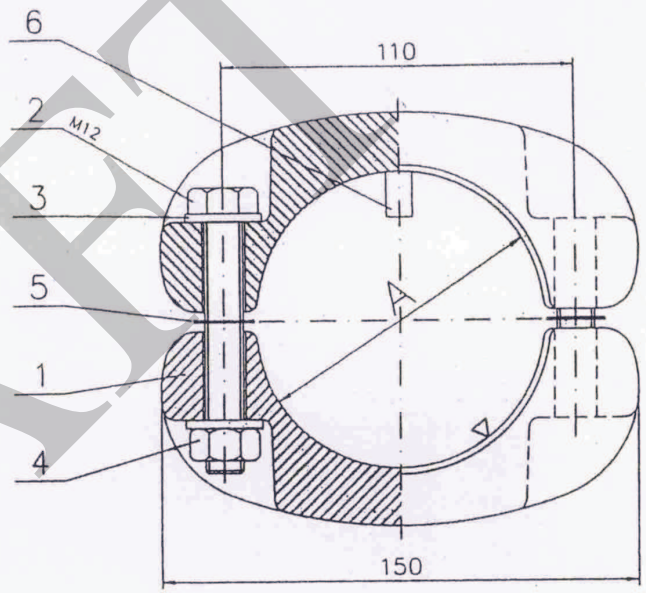

43.94

ELECTRICITY GENERATING AUTHORITY OF THAILAND
Contract No – EGAT 47–N86707–8–2–30(43)IPPE–S1

Item – T | Terminal Number – 44.04

Benennung Al–Gerade–Verbindungsklemme

Description Al–Straight–Connector

Artikel Nr / Article No. 1AA100–090

Änderungen / Changes

Änd.	Was geaenderl	Gez. Datum				
			A= ø90	gez.:	01–12–2000	Matt
			B=	gepr.	01–12–2000	
			C=	M= 1:2.5		
			D=			vorh.

LORÜNSER

(นางวิมลวรรณ ศรีวัฒนาเมธี)
พฟล.พส.

DRAFT

153

This drawing and all data contained therein is legal and intellectual property of LORUNSER Austria GmbH and must not be altered or transmitted to any third party without our written consent.

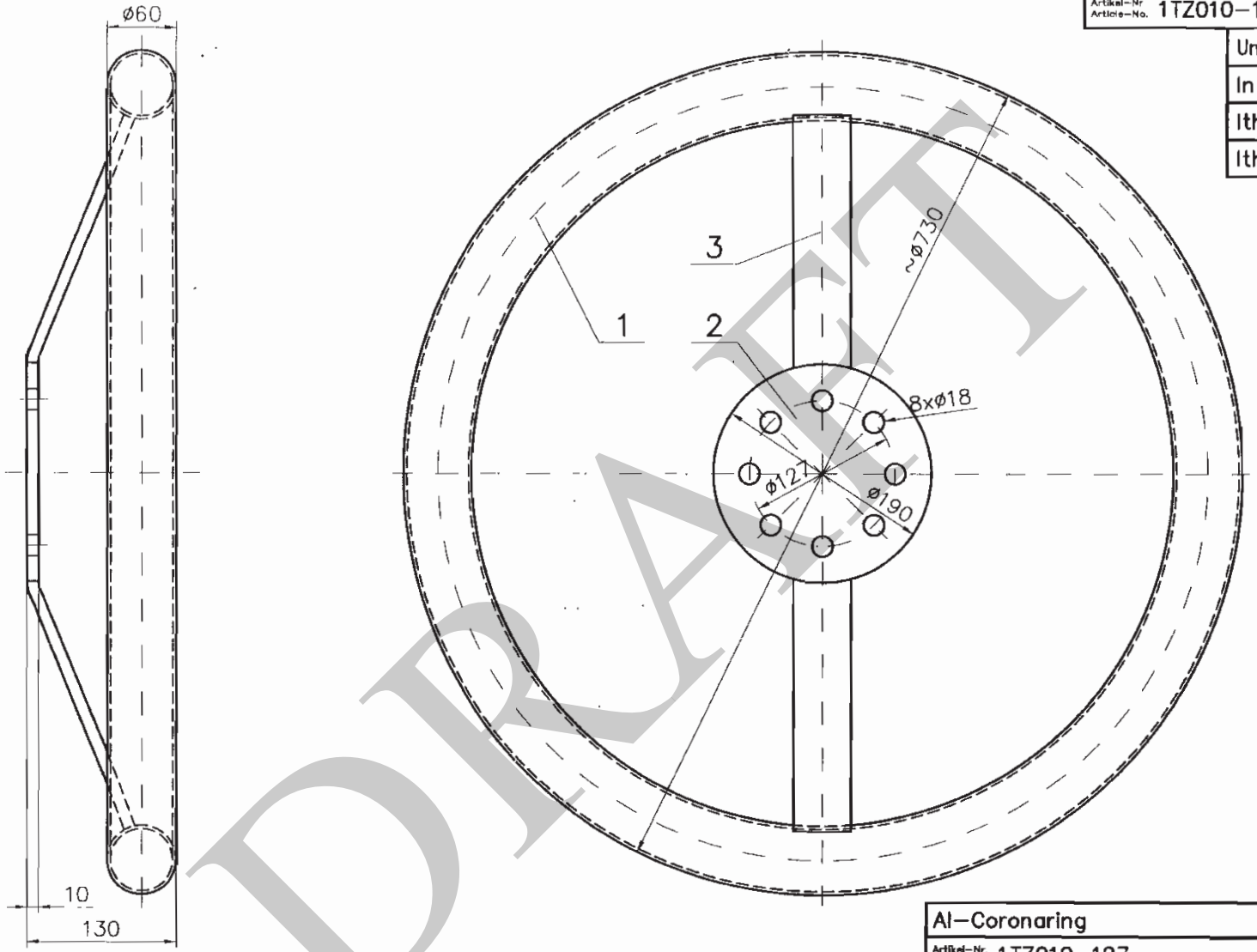

Artikel-Nr. Article-No.	1TZ010-127
Un	525 kVAC
In	A
Ith	50 kA1s
Ith	28,9 kA3s

Al-Coronaring

Artikel-Nr. Article-No. 1TZ010-127

	Datum/Name Date/Name		
gez. drawn	15.02.2011 Bitsche M.	Gewicht Weight	~4,5 Kg
gepr. appr.	15.02.2011 Rinner N.	Maßstab Scale	1:5
		Werkzeuge früher	vorh.

Bauteil-Nr. Components

LORÜNSER AUSTRIA

Positions-Nr. Position-No.	Kundenprojekt Nummer Customer Project Number	A=	Datum/Name Date/Name · Nr. No.
Projekt-Nr. Project-No.	Bemerkung Comments	B=	
Änderung Revision · Datum Date		C=	
LL-Bezug LL-Reference		D=	

DRAFT

BURNDY do BRASIL	BUS SUSPENSION CLAMP CHS18A	Fl. de Fls R

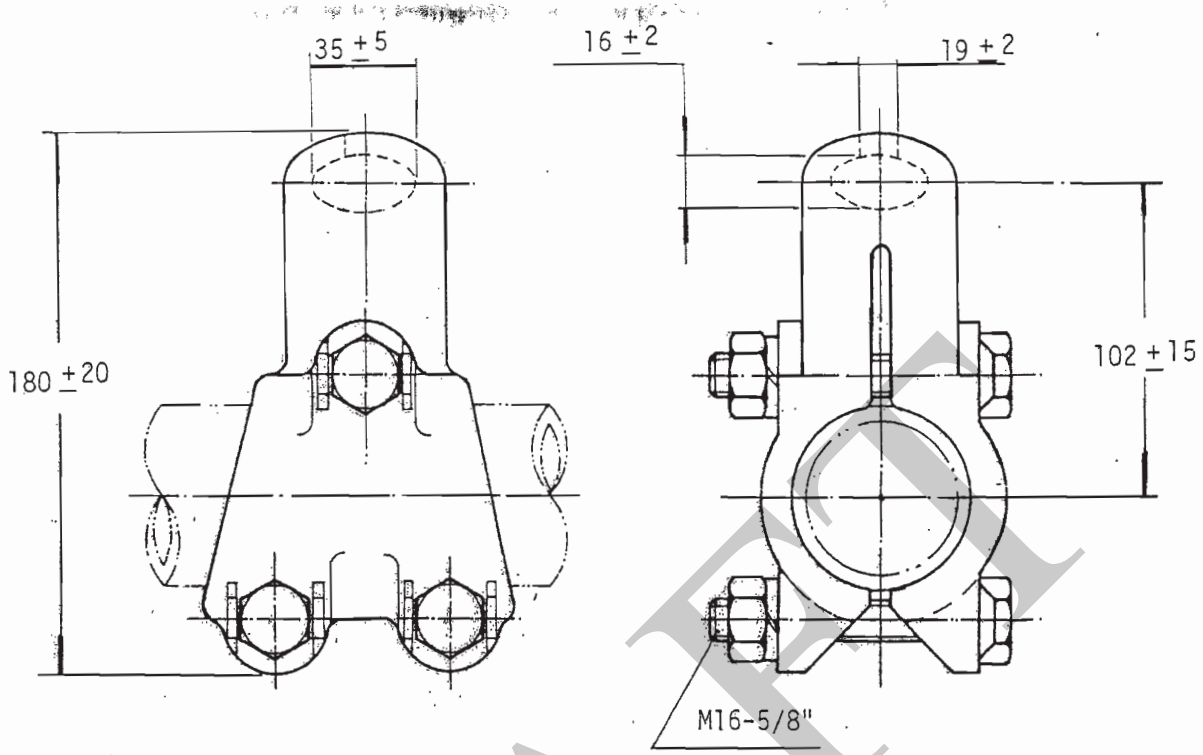

APPLICATION: Aluminum tube 2" IPS

INSTALLATION: Bolted

MATERIAL: Body and cap: Cast aluminum alloy
Bolts, nuts and lockwashers: Aluminum alloy

TIGHTENING TORQUE: 5,5 mkgf(5/8") - M16

LETTERING: BURNDY
CHS18A

ATE ADVANCED TECHNOLOGY EQUIPMENT
Tel : 643-0982, 246-2242

Dimensions in mm, for reference only.

Data	Des.	Ver.	Aprov.	
06.25.92				Material revised
10.20.88				SUBSTITUIÇÃO DE

SAC - 78037-E

DRAFT

BURNDY	SUPPORT CONNECTOR UHKR16A-3	Fl. de Fls. R

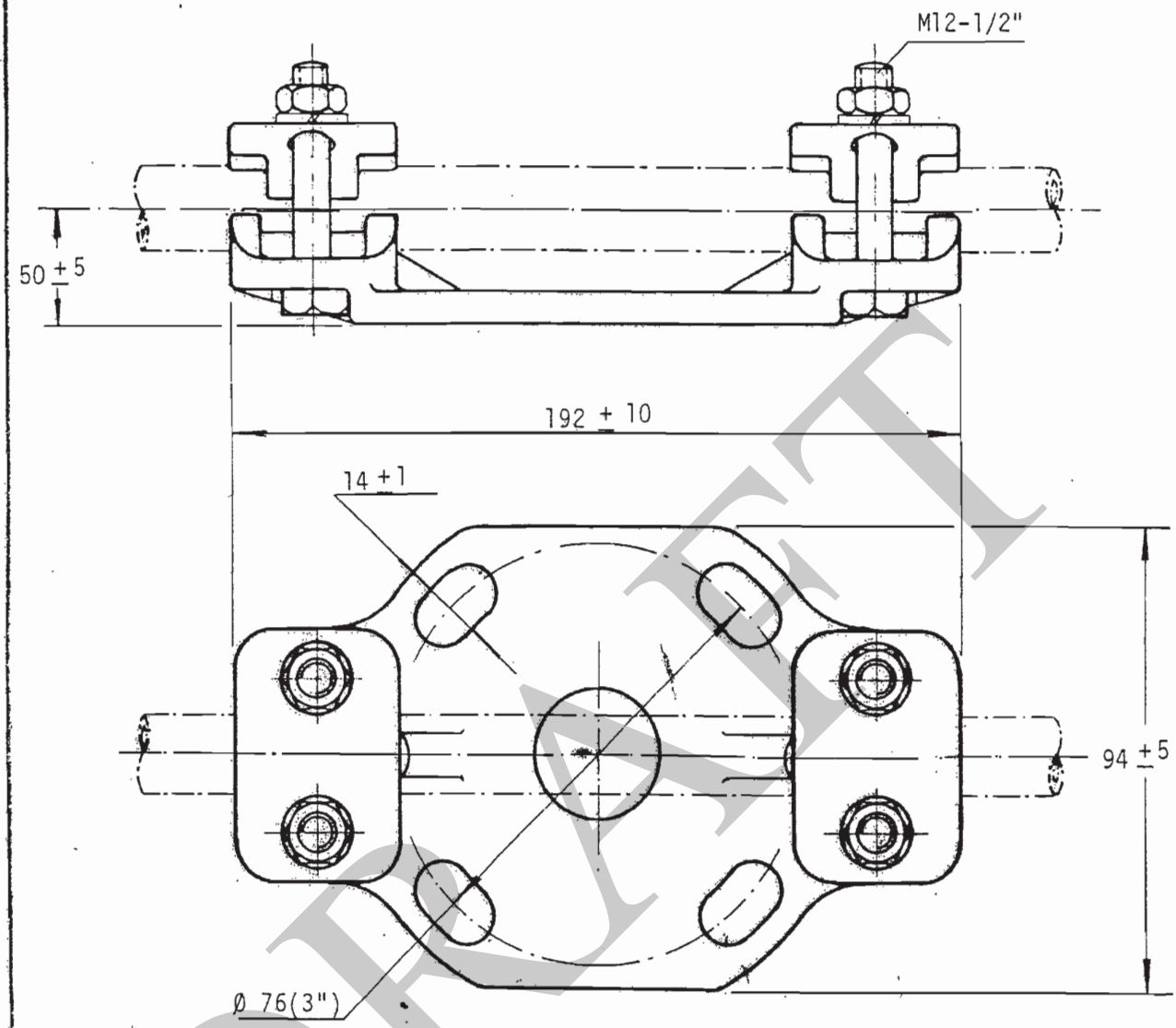

APPLICATION: 1200-2000 MCM-AL or 1113-1780 MCM-ACSR
Aluminum tube 1-1 1/4" IPS

INSTALLATION: Bolted TIGHTENING TORQUE: 3,5 mkgf(1/2") Al.-3,0 mkgf(M12)Al

MATERIAL: Body and caps: Cast aluminum alloy (ASTM B26)
Bolts, nuts and lockwashers: Aluminum alloy

LETTERING: BURNDY
UHKR16A-3
605-1013 mm^2 - 1200-2000 MCM-AL
564-890 mm^2 - 1113-1780 MCM-ACSR
33,4-42,2 mm - 1" - 1 1/4" IPS

ATE ADVANCED TECHNOLOGY EQUIPMENT
Tel: 643-0982, 246 2242

WEIGHT: 1,65 kg ± 10%

NOTE: When the letter "B" is added to the catalog number, the connector will be supplied with hardware for fixing to base of insulator.
EX: UHKR16A-3B

Dimensions in mm, for reference only.

Data	Des.	Ver.	Aprov.	SUBSTITUIÇÃO DE
06.25.92				Material revised
06.07.78				

SAU - 66657-E

DRAFT

BURNDY do BRASIL	SUPPORT CONDUCTOR UHG18A-3	ITEM 4-9 Fl. de Fls. R

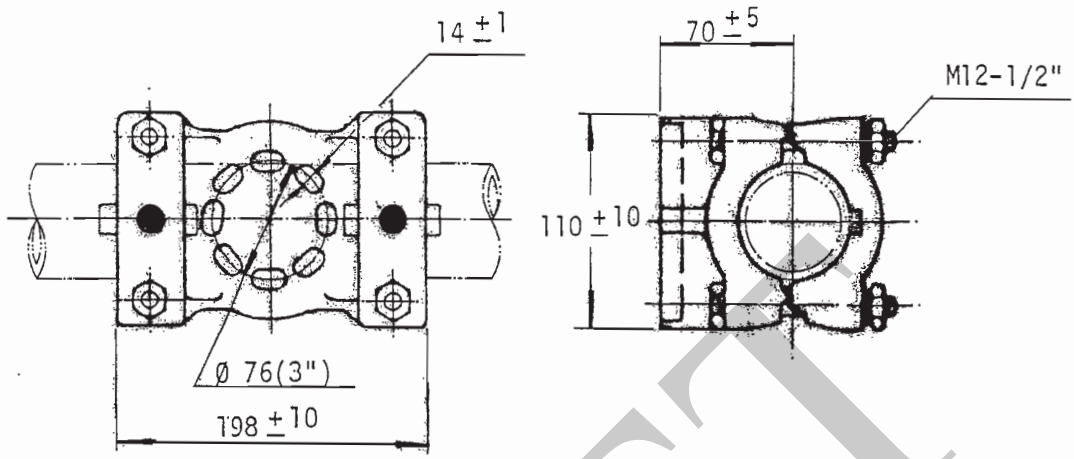

APPLICATION: Aluminum tube 2" IPS

INSTALLATION: Bolted

TIGHTENING TORQUE: 3,0 mkgf (M12) - 3,5 mkgf(1/2")

MATERIAL: Body and caps: Cast aluminum alloy
Bolts, nuts and lockwashers: Aluminum alloy

LETTERING: BURNDY
UHG18A-3

NOTE: When the letter "B" is added to the catalog number, the connector will be supplied with bolts, nuts and washers in steel hot dip zinc coated for mounting to pad of insulator.
EX: UHG18A-3-B

DRAFT

ATE ADVANCED TECHNOLOGY EQUIPMENT
Tel: 643-3982, 240-2242

Dimensions in mm, for reference only.

Data	Des	Ver	Aprov.		
06.25.92				Material revised	
09.30.88	Carlos			Revised	
				SUBSTITUIÇÃO DE	SAU - 58571-E

BURNDY do BRASIL

STREAMLINED TERMINAL

WA....R-4N-90

Fl. de Fls R

9963

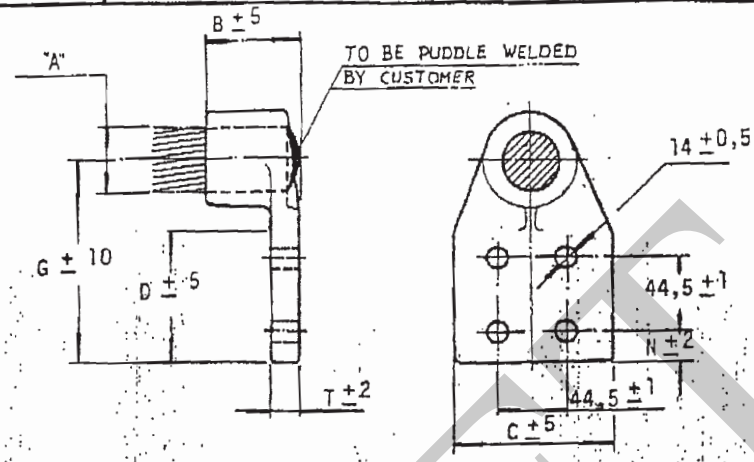

LEGEND

CATALOG NUMBER	ACCOMMODATION "A" - MCM	DIMENSIONS B	C	D		G	N	T		
WA41R-4N-90	550 - 650 AL 477 - 605 ACSR	44	76	76		110	16	13		
WA54R-4N-90	1400-1600 AL 1272-1431 ACSR	51	76	76		125	16	14		

29.93

MATERIAL: Cast aluminum alloy

LETTERING: BURNDY
(typical) WA41R-4N-90

NOTE : When the letters "HSS" are added to the catalog number, the connector will be supplied with elements in stainless steel for fixing to pad of the equipment. EX: WA41R-4N-90-HSS

Dimensions in mm, for reference only.

					R
18-07-96				GENERAL REVIEW	R1
Data	Des	Ver	Aprov	SUBSTITUIÇÃO DE	SAW - B1228-E
02.22.95					

DRAFT

A FCI	EXPANSION TERMINAL WXA18A–4N–SG1	Fl. DE Fls. R

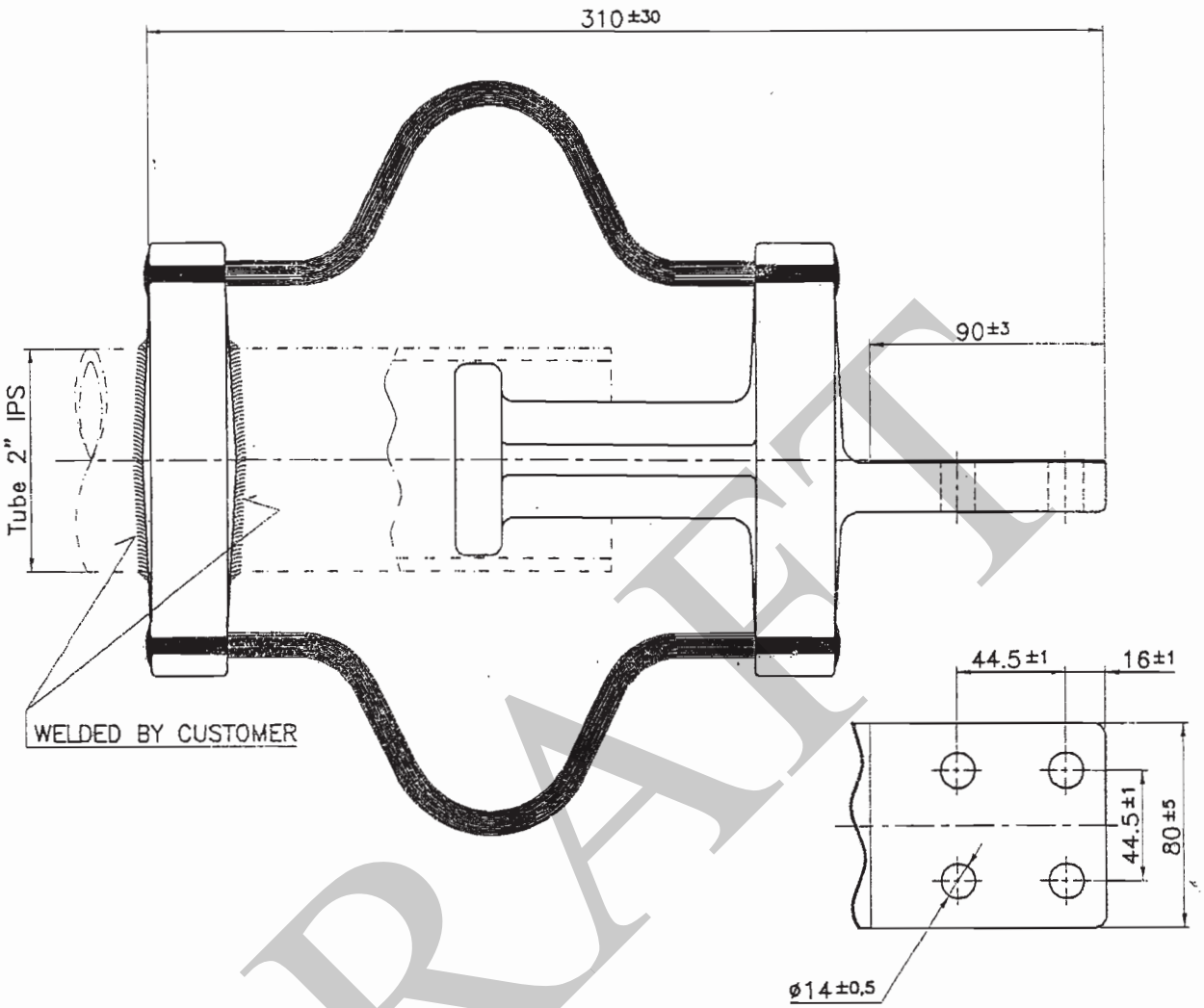

DRAFT

APPLICATION: Expansion terminal for aluminum tube 2" IPS (Sch. 40) to pad with 4 holes Nema.

INSTALLATION: Welded

MATERIAL: Body, Clamp and Taps: Cast aluminum alloy
Flexible Straps: Aluminum

LETTERING: BURNDY
WXA18A–4N–SG1

ATE ADVANCED TECHNOLOGY EQUIPMENT
Tel : 643-0982, 246-2242

NOTA:
1–When the letter "H" is added to the catalog number, the connector will be supplied with elements for fixing to pad of the equipment. Ex: WXA18A–4N–SG1-H

Dimensions in mm, for reference only.

Data	Des.	Ver.	Aprov.	SUBSTITUICAO DE	SAW–83255–F

LEGEND 30/3

148

~~165~~

SD ALT. NO CAD.

BURNDY doBRASIL	WELDMENT BARTAP SWAB...A-34N	Fl de Fls	R

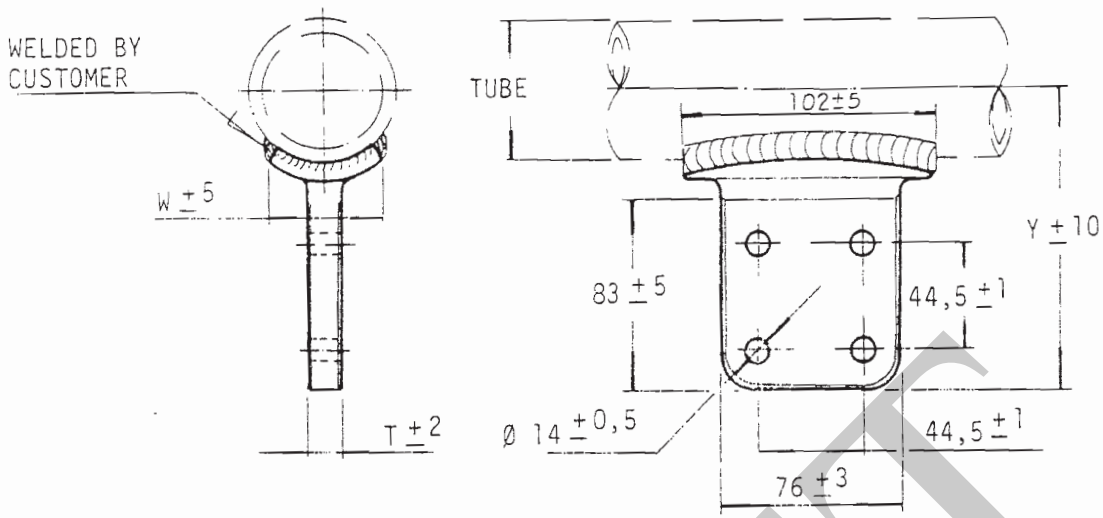

ITEM	CATALOG NUMBER	DIMENSIONS T	DIMENSIONS W	DIMENSIONS	ACCOMMODATION	Y
1	SWAB22A-34N	19	61		2 1/2" IPS	133
					3" IPS	142
					3 1/2" IPS	150
					4" IPS	158
2	SWAB86A-34N	26	67		3" IPS	141
					3 1/2" IPS	148
					4" IPS	154
					4 1/2" IPS	161
					5" IPS	169
					6" IPS	183
3	SWAB19A-34N	13	33		1" IPS	113
					1 1/4" IPS	118
					1 1/2" IPS	121
					2" IPS	129
					2 1/2" IPS	135

LEGEND 42.02 →

APPLICATION: "T" connector for aluminum tube to pad with 4 holes NEMA

INSTALLATION: Bolted

MATERIAL: Body: Cast aluminum alloy

LETTERING: (typical) BURNDY SWAB22A-34N

The connector performance will be according to NEMA

NOTE: When the letters "HSS" are added to the catalog number, the connector will be supplied with elements in stainless steel for fixing to pad of the equipment. EX: SWAB19A-34N-HSS

ATE ADVANCED TECHNOLOGY EQUIPMENT
Tel : 543-0982, 246-2242

Dimensions in mm, for reference only.

Data	Des	Ver	Aprov	SUBSTITUIÇÃO DE
09.02.88	P.D			REVISED ITEM 3
05.16.88	P.D			

SAS - 70465-E

DRAFT

Kumwell

HORIZONTAL THRU CABLE TO GROUND ROD

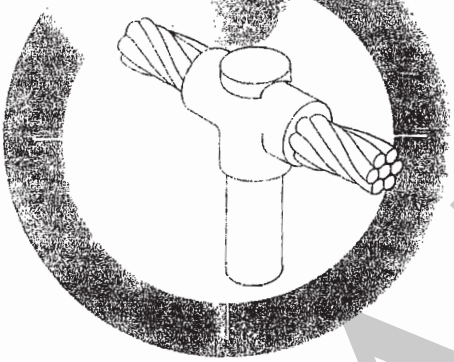

A (AWG)	B (AWG)	Powder (G)	Smoothite Mold Type	Clamp
5/8	6	32	CR2-C-5/86A	HCC00
5/8	4	32	CR2-C-5/84A	HCC00
5/8	2	90	CR2-C-5/82A	HCC00
5/8	1/0	90	CR2-C-5/81/0	HCC00
5/8	2/0	115	CR2-C-5/82/0	HCC00
5/8	3/0	115	CR2-C-5/83/0	HCC00
5/8	4/0	115	CR2-C-5/84/0	HCC00
5/8	250	150	CR2-C-5/8250M	HCC00
5/8	300	200	CR2-C-5/8300M	HCC00
5/8	350	200	CR2-C-5/8350M	HCC00
5/8	500	250	CR2-C-5/8500M	HCC00
3/4	6	45	CR2-C-3/46A	HCC00
3/4	4	65	CR2-C-3/44A	HCC00
3/4	2	90	CR2-C-3/42A	HCC00
3/4	1/0	115	CR2-C-3/41/0	HCC00
3/4	2/0	115	CR2-C-3/42/0	HCC00
3/4	3/0	115	CR2-C-3/43/0	HCC00
3/4	4/0	115	CR2-C-3/44/0	HCC00
3/4	250	150	CR2-C-3/4250M	HCC00
3/4	300	200	CR2-C-3/4300M	HCC00
3/4	350	200	CR2-C-3/4350M	HCC00
3/4	500	250	CR2-C-3/4500M	HCC00

60.02 → 60.10

ANGULAR CABLE DROP TO VERTICAL PIPE SURFACE

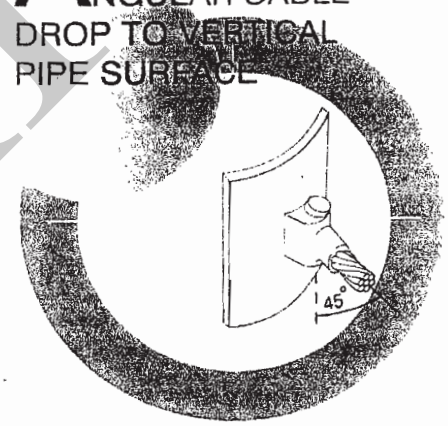

A (AWG)	Powder (G)	Smoothite Mold Type	Clamp
6	45	CP1-X-6A	HCC00-X
4	45	CP1-X-4A	HCC00-X
2	45	CP1-X-2A	HCC00-X
1/0	90	CP1-X-1/0	HCC00-X
2/0	90	CP1-X-2/0	HCC00-X
3/0	115	CP1-X-3/0	HCC00-X
4/0	115	CP1-X-4/0	HCC00-X
250	115	CP1-X-250M	HCC00-X
300	150	CP1-X-300M	HCC00-X
350	200	CP1-X-350M	HCC00-X
500	250	CP1-X-500M	HCC00-X

60.05 → ← 60.13

DRAFT

Kumwell

HORIZONTAL CABLE TAP TO HORIZONTAL CABLE

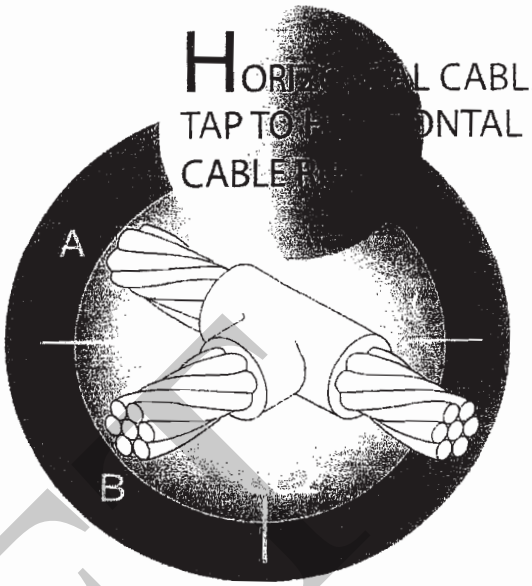

HORIZ END TO

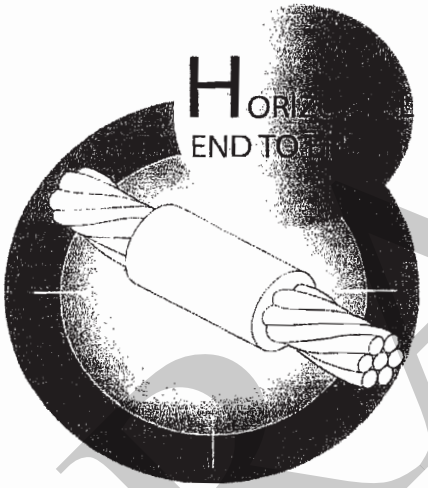

LEGEND 60.03 & 60.11

A AWG	B AWG	Powder(g)	Graphite Mold Type	Clamp
6	6	25	CC2-C-6A6A	HCC00
4	4	32	CC2-C-4A4A	HCC00
2	2	45	CC2-C-2A2A	HCC00
1/0	1/0	90	CC2-C-1/01/0	HCC00
2/0	2/0	90	CC2-C-2/02/0	HCC00
2/0	1/0	90	CC2-C-2/01/0	HCC00
2/0	2	45	CC2-C-2/02A	HCC00
3/0	3/0	115	CC2-C-3/03/0	HCC00
3/0	2/0	90	CC2-C-3/02/0	HCC00
3/0	1/0	90	CC2-C-3/01/0	HCC00
4/0	4/0	150	CC2-C-4/04/0	HCC00
4/0	3/0	115	CC2-C-4/03/0	HCC00
4/0	2/0	90	CC2-C-4/02/0	HCC00
4/0	1/0	90	CC2-C-4/01/0	HCC00
250	250	150	CC2-C-250M250M	HCC00
250	4/0	150	CC2-C-250M4/0	HCC00
250	3/0	150	CC2-C-250M3/0	HCC00
250	2/0	90	CC2-C-250M2/0	HCC00
300	300	200	CC2-C-300M300M	HCC00
300	250	150	CC2-C-300M250M	HCC00
300	4/0	150	CC2-C-300M4/0	HCC00
300	3/0	150	CC2-C-300M3/0	HCC00
350	350	200	CC2-C-350M350M	HCC00
350	300	200	CC2-C-350M300M	HCC00
350	250	200	CC2-C-350M250M	HCC00
350	4/0	150	CC2-C-350M4/0	HCC00
500	500	150X2	CC2-C-500M500M	HCC00
500	350	200	CC2-C-500M350M	HCC00
500	300	200	CC2-C-500M300M	HCC00
500	250	200	CC2-C-500M250M	HCC00

60.08, 60.16

A AWG	Powder(g)	Graphite Mold Type	Clamp
8	15	CC1-C-8A	HCC00
6	25	CC1-C-6A	HCC00
4	25	CC1-C-4A	HCC00
2	32	CC1-C-2A	HCC00
1/0	45	CC1-C-1/0	HCC00
2/0	65	CC1-C-2/0	HCC00
3/0	90	CC1-C-3/0	HCC00
4/0	90	CC1-C-4/0	HCC00
250	115	CC1-C-250M	HCC00
300	115	CC1-C-300M	HCC00
350	150	CC1-C-350M	HCC00
500	200	CC1-C-500M	HCC00
750	150X2	CC1-D-750M	HCD00
1000	200X2	CC1-D-1000M	HCD00

DRAFT

Kumwell

A ANGULAR CABLE DROP TO VERTICAL STEEL SURFACE

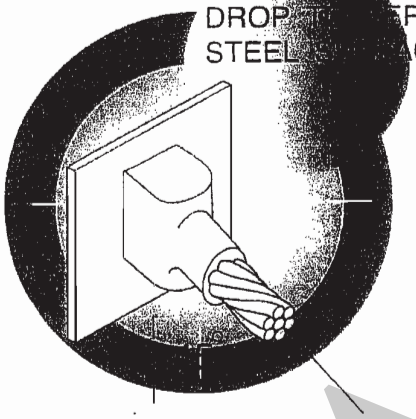

A AWG	Powder(g)	Graphite Mold Type	Clamp
6	45	CS3-Y-6A	HCC00-Y
4	45	CS3-Y-4A	HCC00-Y
2	45	CS3-Y-2A	HCC00-Y
1/0	90	CS3-Y-1/0	HCC00-Y
2/0	90	CS3-Y-2/0	HCC00-Y
3/0	115	CS3-Y-3/0	HCC00-Y
4/0	115	CS3-Y-4/0	HCC00-Y
250	115	CS3-Y-250M	HCC00-Y
300	150	CS3-Y-300M	HCC00-Y
350	200	CS3-Y-350M	HCC00-Y
500	250	CS3-Y-500M	HCC00-Y

LEGEND 60.04 & 60.12

V VERTICAL CABLE THRU VERTICAL SURFACE [OFF SURF

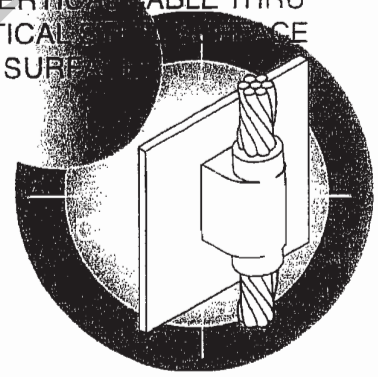

A AWG	Powder(g)	Graphite Mold Type	Clamp
4	90	CS4-Y-4A	HCC00-Y
2	115	CS4-Y-2A	HCC00-Y
1/0	200	CS4-Y-1/0	HCC00-Y
2/0	200	CS4-Y-2/0	HCC00-Y
3/0	250	CS4-Y-3/0	HCC00-Y
4/0	250	CS4-Y-4/0	HCC00-Y
250	250	CS4-Y-250M	HCC00-Y

60.07&60.15

DRAFT

Kumwell

HORIZONTAL TO HORIZONTAL CABLE CROSS

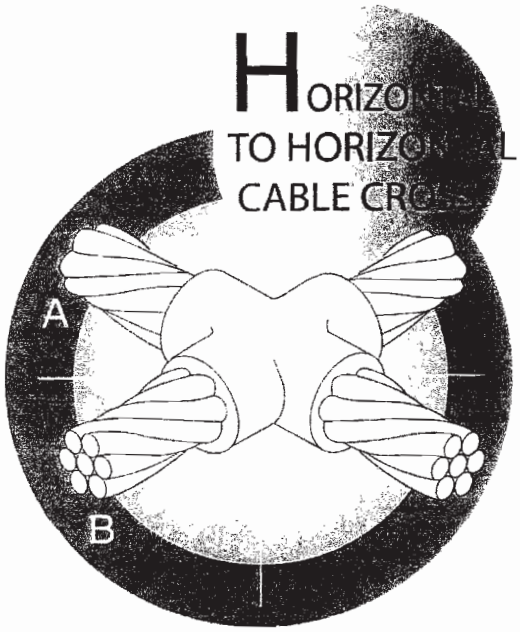

A AWG	B AWG	Powder(g)	Graphite Mold Type	Clamp
4	4	45	CC4-C-4A4A	HCC00
2	2	65	CC4-C-2A2A	HCC00
1/0	1/0	90	CC4-C-1/01/0	HCC00
2/0	2/0	115	CC4-C-2/02/0	HCC00
2/0	1/0	115	CC4-C-2/01/0	HCC00
2/0	2	115	CC4-C-2/02A	HCC00
3/0	3/0	150	CC4-C-3/03/0	HCC00
3/0	2/0	150	CC4-C-3/02/0	HCC00
3/0	1/0	115	CC4-C-3/01/0	HCC00
4/0	4/0	200	CC4-C-4/04/0	HCC00
4/0	3/0	150	CC4-C-4/03/0	HCC00
4/0	2/0	150	CC4-C-4/02/0	HCC00
4/0	1/0	150	CC4-C-4/01/0	HCC00
250	250	200	CC4-C-250M250M	HCC00
250	4/0	200	CC4-C-250M4/0	HCC00
250	3/0	200	CC4-C-250M3/0	HCC00
250	2/0	150	CC4-C-250M2/0	HCC00
300	300	250	CC4-C-300M300M	HCC00
300	250	250	CC4-C-300M250M	HCC00
300	4/0	200	CC4-C-300M4/0	HCC00
300	3/0	200	CC4-C-300M3/0	HCC00
300	2/0	150	CC4-C-300M2/0	HCC00
350	350	250	CC4-C-350M350M	HCC00
350	300	250	CC4-C-350M300M	HCC00
350	250	250	CC4-C-350M250M	HCC00
350	4/0	200	CC4-C-350M4/0	HCC00
500	500	2X250	CC4-D-500M500M	HCD00
500	350	2X200	CC4-D-500M350M	HCD00
500	300	2X200	CC4-D-500M300M	HCD00
500	250	2X150	CC4-D-500M250M	HCD00

60.06 → 4/0 4/0 200 CC4-C-4/04/0 HCC00 ← 60.14

HORIZONTAL CABLE TERMINAL TO GROUND ROD

A inch	B AWG	Powder (g)	Graphite Mold Type	Clamp
5/8	6	32	CR1-C-5/86A	HCC00
5/8	4	32	CR1-C-5/84A	HCC00
5/8	2	90	CR1-C-5/82A	HCC00
5/8	1/0	90	CR1-C-5/81/0	HCC00
5/8	2/0	115	CR1-C-5/82/0	HCC00
5/8	3/0	115	CR1-C-5/83/0	HCC00
5/8	4/0	115	CR1-C-5/84/0	HCC00
5/8	250	150	CR1-C-5/8250M	HCC00
5/8	300	200	CR1-C-5/8300M	HCC00
5/8	350	200	CR1-C-5/8350M	HCC00
5/8	500	250	CR1-C-5/8500M	HCC00
3/4	6	45	CR1-C-3/46A	HCC00
3/4	4	65	CR1-C-3/44A	HCC00
3/4	2	90	CR1-C-3/42A	HCC00
3/4	1/0	115	CR1-C-3/41/0	HCC00
3/4	2/0	115	CR1-C-3/42/0	HCC00
3/4	3/0	115	CR1-C-3/43/0	HCC00
3/4	4/0	115	CR1-C-3/44/0	HCC00
3/4	250	150	CR1-C-3/4250M	HCC00
3/4	300	200	CR1-C-3/4300M	HCC00
3/4	350	200	CR1-C-3/4350M	HCC00
3/4	500	250	CR1-C-3/4500M	HCC00

DRAFT

HANDLE CLAMP

Kumwell

KUMWELL handle clamp make possible the use of many different size and type of graphite moulds with only two different type.

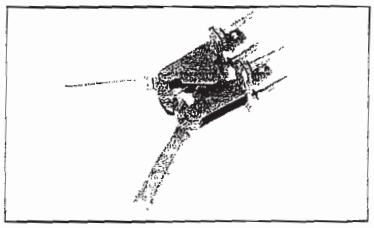

HCC00 OR HCD00

- Clamp type "HCC00" for nominal size mould 3-1/8" x 3-1/8" square and distance between rod 2-5/16"
- Clamp type "HCD00" for nominal size mould 4"x4" square and distance between rod 3"

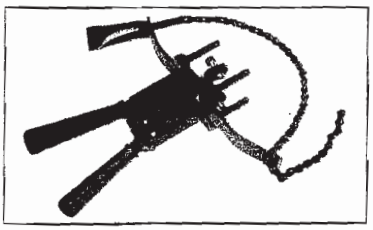

HCC00-X OR HCD00-X

- Chain support "X"
  Chain support are used to hold a mould in position on horizontal or vertical pipe up to 4" in diameter.
  For larger pipe chain support is available.

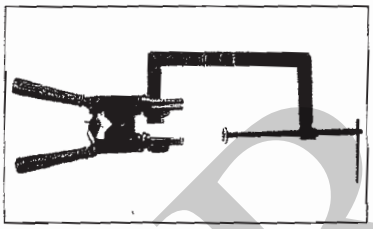

HCC00-Y OR HCD00-Y

- Vertical beam support "Y"
  The vertical beam support are used to hold a mould in position on a vertical steel column or angle.
  It is easily attached to the handle clamp type "HCC00" or "HCD00" for welding application type CS3, CS18, CS23 & CS27

LEGEND
60.09 →

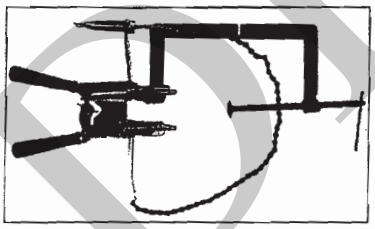

HCC00-XY OR HCD00-XY

- Chain & Vertical beam support "xy"

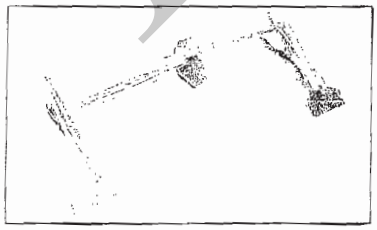

KTA016

- Clamp type "KTA016" have to be used with large size hard wire cable (copper or steel)

DRAFT

Kumwell
Exothermic Welding

Tool & Accessories KTA000

60.17 ← Item 7-15,7-16

Products	CODE NO.	DETAIL
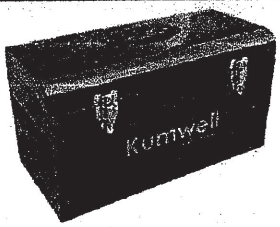	KTA001	Tool Box 220 x 130 x 240 mm.
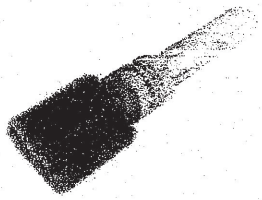	KTA006	Cable clean brush
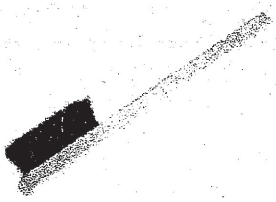	KTA007	Mould brush
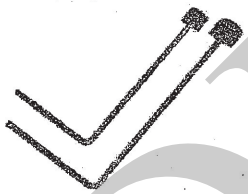	KTA010	Scraper for powder size 115 - 250 g.
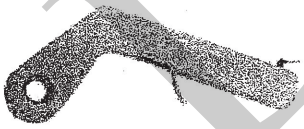	KTA014U 60.18	Flint gun
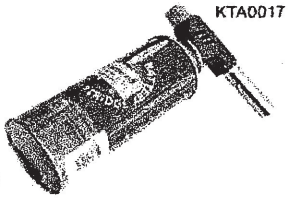	KTA0017	Butane Torch
	KTA0018	Butane Gas

DRAFT

บริษัท โปรเกรสซิฟ อินเตอร์-เทรด จำกัด
PROGRESSIVE INTER-TRADE CO.,LTD.

Kumwell

TERMINAL LUGS

TERMINAL LUG ONE HOLE 4/0

High copper alloy terminal joining
for cable to equipment pads
Type : KGXTEL - 4/0

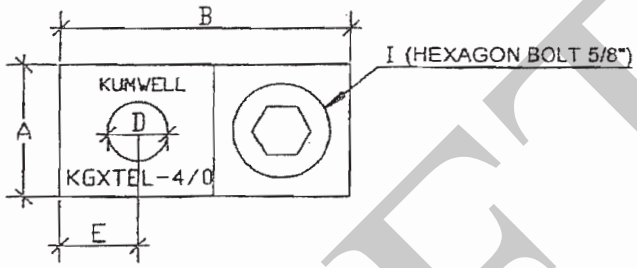

TOP VIEW

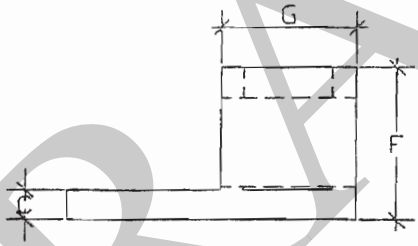

SIDE VIEW

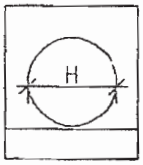

FRONT VIEW

DRAFT

CODE NO.	SIZE mm.								
	A	B	C	D	E	F	G	H	I
→ KGXTEL-4/0	22	47.8	5	10	11	25.4	22.2	14.8	15.8

LEGEND 60.19

101
X3

Clamp A Cable to Flat Bar

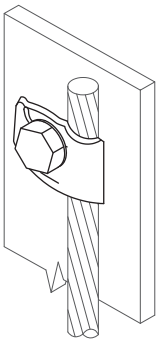

Flat Bar

Code No.	Cable Size (mm^2)	Bolt Size (in)	Weight (kg)
GXCCF-G1	25-50	3/8x1½	0.076
GXCCF-G2	70-120	1/2x2	0.136
GXCCF-G3	150-240	1/2x2	0.144

Test Certificate
IEC 62561 Part 1

Material
Copper Alloy - BS EN 1982
U Bolt, Nut - Brass

Application
Clamp cable conductors to steal flat surface.

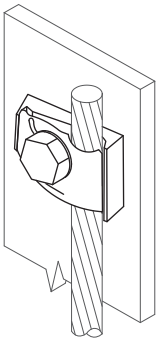

Flat Bar Clamp

Code No.	Cable Size (mm^2)	Bolt Size (in)	Weight (kg)
GXCCF-G1P	25-50	3/8x1½	0.124
GXCCF-G2P	70-120	1/2x2	0.194
GXCCF-G3P	150-240	1/2x2	0.228

Test Certificate
IEC 62561 Part 1

Material
Copper Alloy - BS EN 1982
U Bolt, Nut - Brass

Application
Clamp 2 cable conductors to steal flat surface with grooving piece in order to cable dirtortion.

Clamp Two Cable to Flat Bar

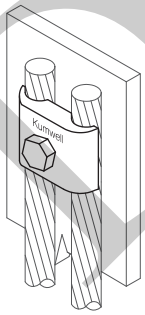

Flat Bar

Code No.	Cable Size (mm^2)	Bolt Size (in)	Weight (kg)
GXCCP-G1	25-50	3/8x1½	0.16
GXCCP-G2	70-120	1/2x2	0.24
GXCCP-G3	150-240	1/2x2	0.31

Test Certificate
IEC 62561 Part 1

Material
Copper Alloy - BS EN 1982
U Bolt, Nut - Brass

Application
Clamp 2 cable conductors to steal flat surface.

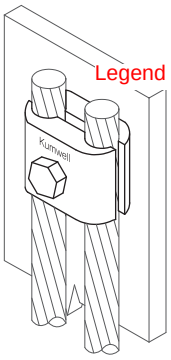

Legend 60.20d

Flat Bar Clamp

Code No.	Cable Size (mm^2)	Bolt Size (in)	Weight (kg)
GXCCP-G1P	25-50	3/8x1½	0.28
GXCCP-G2P	70-120	1/2x2	0.39
GXCCP-G3P	150-240	1/2x2	0.45

Test Certificate
IEC 62561 Part 1

Material
Copper Alloy - BS EN 1982
U Bolt, Nut - Brass

Application
Clamp 2 cable conductors to steal flat surface with grooving piece in order to cable dirtortion.

DRAFT

Kumwell®

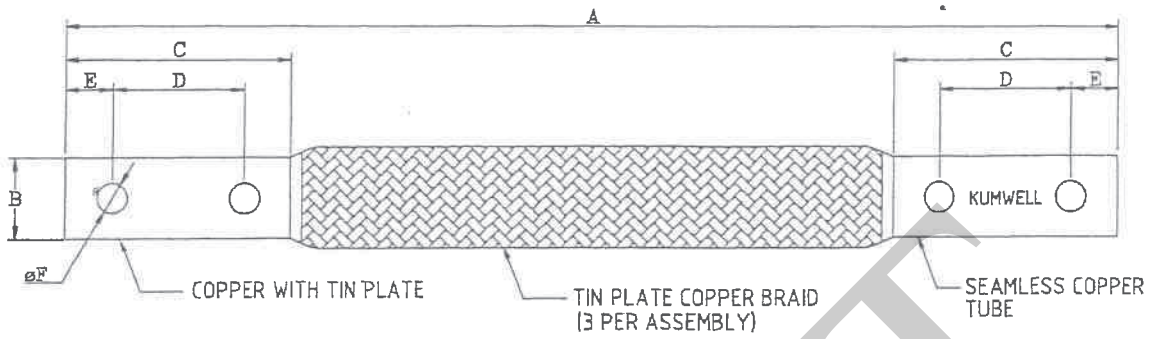

TOP VIEW

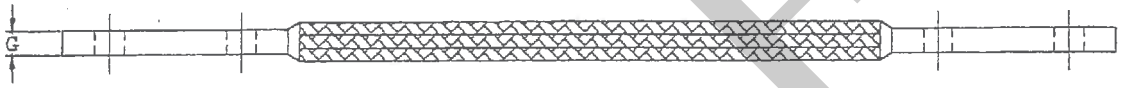

SIDE VIEW

CODE NO.	DIMENSION (mm.)						
	A	B	C	D	E	F	G
KGZFCB 39533	386	31.8	76.2	44.45	15.8	14.2	11.5

Rev.	Revision note	Date	Part	Description	Material	Q'Ty
03	Change Form	3/8/55				
02	Change Form	28/4/53				
01	Revised Form And Change Dimension	26/8/52	②	Braid 30x3.0mm.	Copper Braid 50mm²	3
00	New Design	15/6/49	①	Copper Tube	Copper Tube	2

Filename	Scale	Title	Dep.
TN Z5 M/D:/KML/Bride/KGZFCB 39533.dwg	NTS	FLEXIBLE COPPER BRAID	HW

Designed by	Checked by	Approved by	Sheet	Dwg.No.	Rev.
P.S. ☑ J.O. ☑	P.P. ☑ S.K. ☑	S.J./B.K. ☑	1	KGZFCB 39533-CU	03

Legend No. 60.21

QF-EN-20 : Rev.01 : 7-07-12

DRAFT

KUMWELL

GROUND CLAMP

GROUND CLAMP CONNECTORS CABLE FOR CABLE SIZE 3/0-4/0 AWG

We are made from copper alloys compliance to DIN Standard 17656-76 (GUNMETAL)

Type : KGRC - A

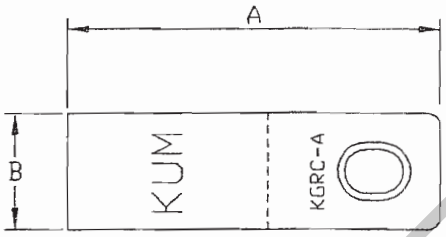

TOP VIEW

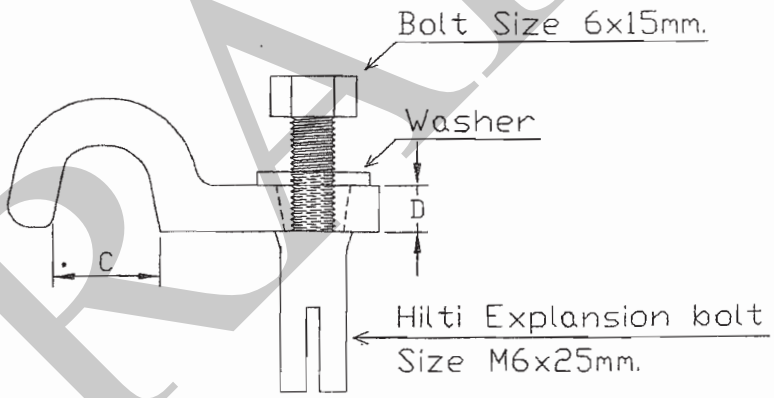

SIDE VIEW

CODE NO.	SIZE (mm.)			
	A	B	C	D
KGRC-A	51	16	14.4	6.5

DRAFT

KUMWELL

PREFABRICATED WIRE MESH (GPWM)

" KUMWELL" The Personal Safety Mats. Shall be manufactured from soild Copper wire 6 or 10 AWG . All crossovers shall be joined by 35 % silver and noncorrosive flux

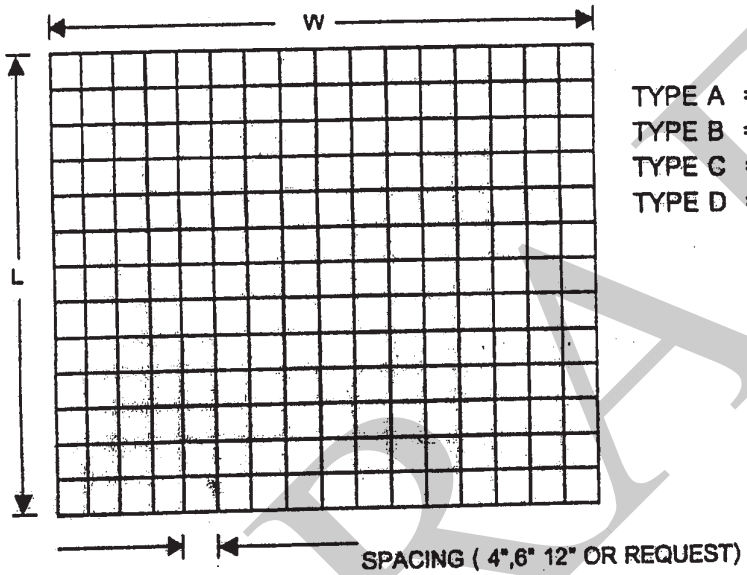

TYPE A = # 6 Soild copper wire mesh on 4"
TYPE B = # 8 Soild copper wire mesh on 6"
TYPE C = #10 Soild copper wire mesh on 12"
TYPE D = OR REQUEST

MOULD FOR CONNECTING

WIRE SIZE	MOULD TYPE	HANDLE CLAM	POWDER (g)
# 6 Soild copper wire	CC14-C-#6#6	C	25
# 8 Soild copper wire	CC14-C-#8#8	C	16
# 10 Soild copper wire	CC14-C-#10#10	C	16

DRAFT

Copper Lugs

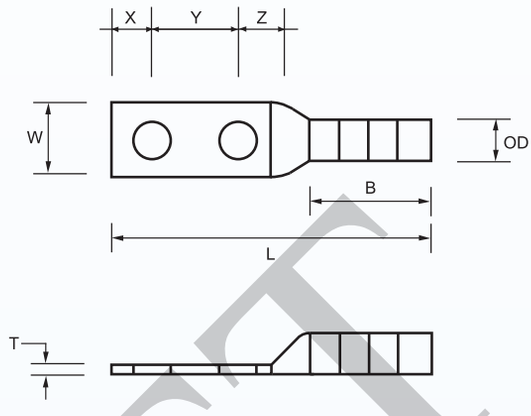

2-Hole Copper Lugs

Code No.	Copper Conductor		Stud Size	Dimensions (in)								
	AWG / MCM	mm²		I.D	O.D	L	W	X	Y	Z	T	B
KTH 8-6 DN	8	-	1/4”	0.18	0.28	2.16	0.43	0.25	0.63	0.37	0.10	0.71
KTH 6-6 DN	6	16	1/4”	0.22	0.31	2.56	0.48	0.25	0.63	0.37	0.08	1.07
KTH 4-6 DN	4	25	1/4”	0.28	0.38	2.58	0.55	0.25	0.63	0.37	0.09	1.07
KTH 2-8 DN	2	35	5/16”	0.31	0.42	3.02	0.66	0.36	0.75	0.44	0.10	1.16
KTH 1/0-12 DN	1/0	50	1/2”	0.40	0.52	4.90	0.76	0.63	1.75	0.63	0.12	1.44
KTH 2/0-12 DN	2/0	70	1/2”	0.45	0.58	4.98	0.85	0.63	1.75	0.63	0.13	1.50
KTH 3/0-12 DN	3/0	95	1/2”	0.51	0.64	4.98	0.96	0.63	1.75	0.63	0.13	1.50
KTH 4/0-12 DN	4/0	-	1/2”	0.58	0.71	5.13	1.06	0.63	1.75	0.63	0.14	1.56
KTH 250-12 DN	250	120	1/2”	0.63	0.77	5.23	1.17	0.63	1.75	0.63	0.14	1.61
KTH 300-12 DN	300	150	1/2”	0.65	0.81	5.80	1.19	0.63	1.75	0.63	0.19	2.05
KTH 350-12 DN	350	-	1/2”	0.70	0.88	5.80	1.28	0.63	1.75	0.75	0.19	2.05
KTH 400-12 DN	400	185	1/2”	0.76	0.95	6.05	1.41	0.63	1.75	0.75	0.19	2.17
KTH 500-12 DN	500	240	1/2”	0.84	1.06	6.11	1.53	0.63	1.75	0.75	0.22	2.30
KTH 600-12 DN	600	300	1/2”	0.92	1.19	6.77	1.69	0.63	1.75	0.75	0.28	2.67
KTH 750-12 DN	750	-	1/2”	1.03	1.30	7.05	1.75	0.63	1.75	0.75	0.28	2.88
KTH 800-12 DN	800	400	1/2”	1.05	1.35	7.05	1.89	0.63	1.75	0.75	0.29	2.88
KTH1000-12 DN	1000	500	1/2”	1.17	1.50	7.26	2.16	0.63	1.75	0.75	0.34	2.99

60.52

Tested : IEC 62561 - 1, UL 486, NEMA CC1
Application : Long barrel lugs are usable with high voltage up to 35 kV
: Suitable for grounding and lightning protection system
Material : One piece seamless, high conductivity pure electrolytic copper and tin plated

DRAFT